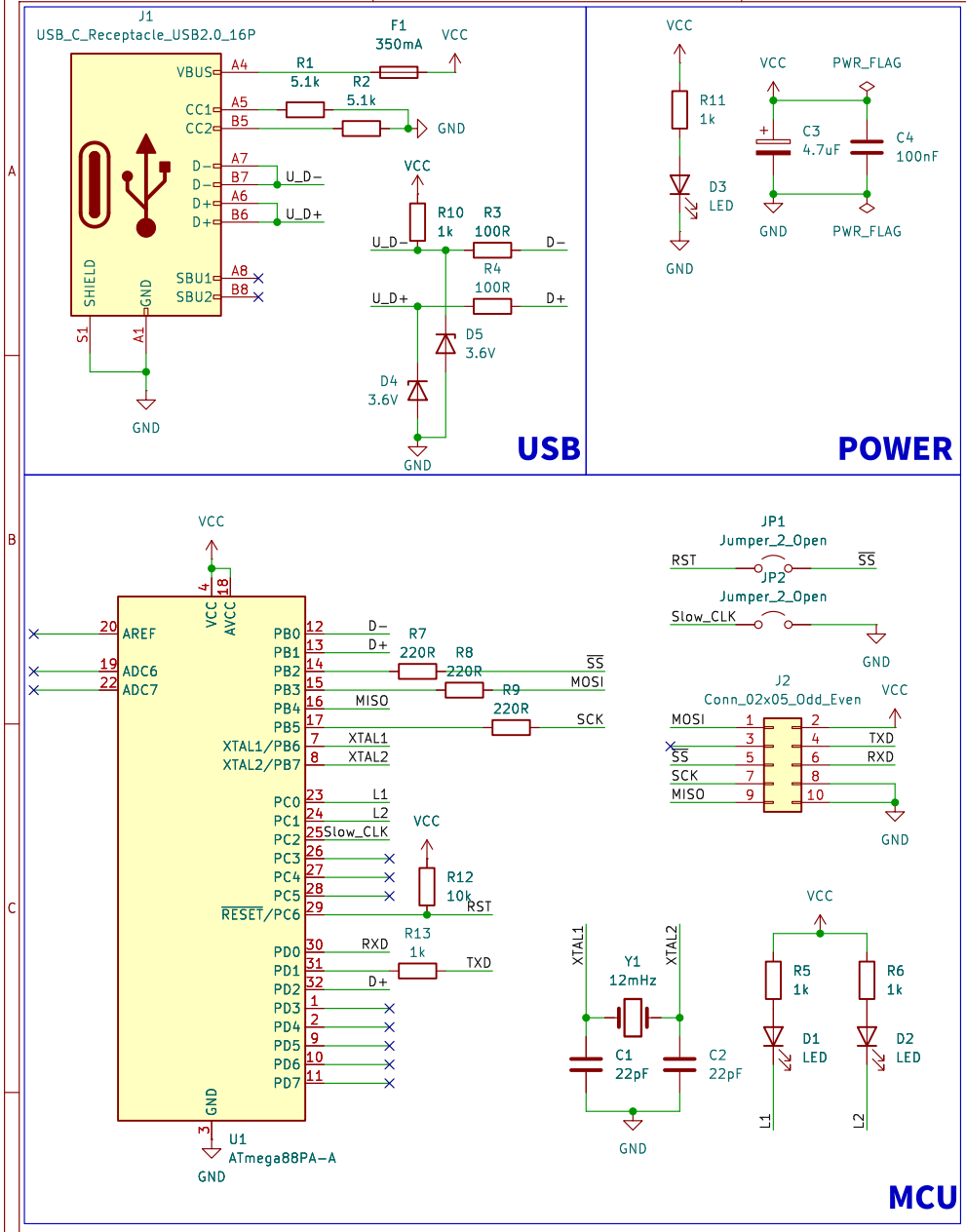

yukuyuku4123

Sheet: /

File: ICSP_Programmer_USBasp.kicad_sch

Title: ICSP_Programmer_USBasp

Size: A4	Date: 2024-06-30	Rev:
KiCad E.D.A. 8.0.1		Id: 1/1