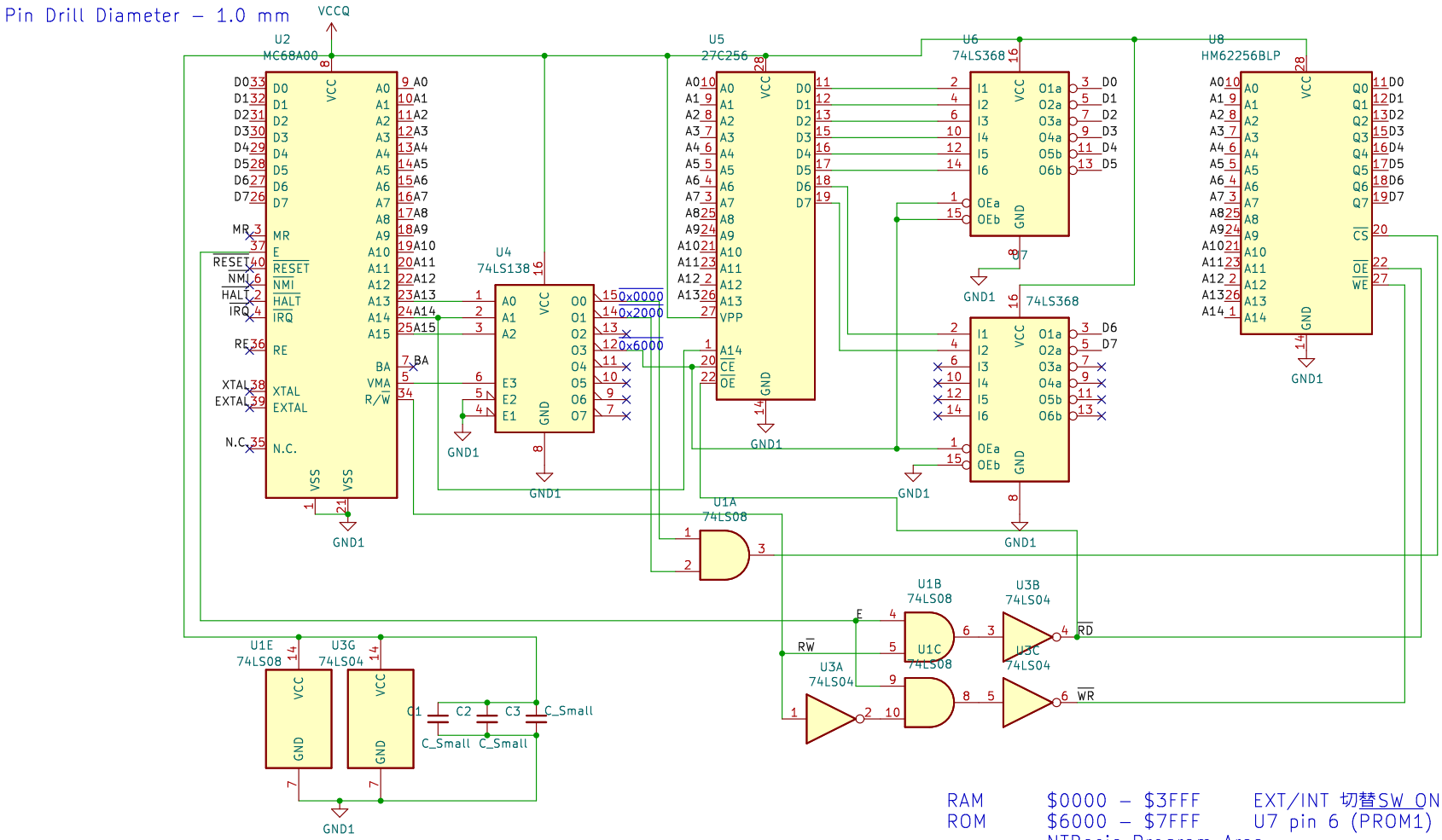

RAM $0000 – $3FFF EXT/INT 切替SW ON MEK6800D2 Board
ROM $6000 – $7FFF U7 pin 6 (PROM1) Pull Up
NTBasic Program Area

MEK6800D2_PiggyBack Rev.2

Sheet: /
File: MEK6800D2.kicad_sch

Title: MEK6800D2_PiggyBack Rev.2

Size: A4	Date: 2023-04-29	Rev:
KiCad E.D.A. kicad 7.0.2-0		Id: 1/1