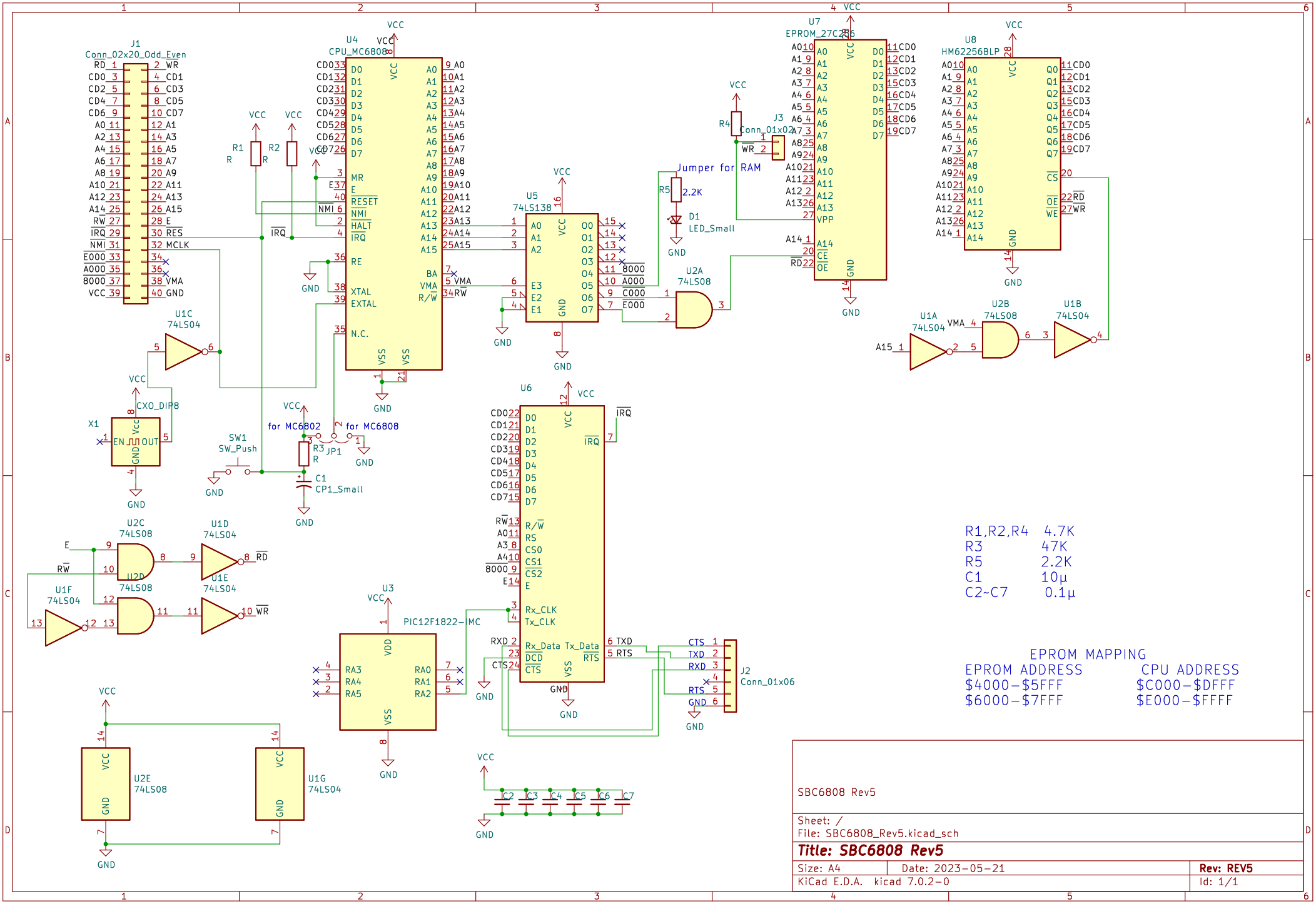
J1
Conn_02x20_Odd_Even
U4
CPU_MC6808
U5
74LS138
U6
U7
EPROM_27C256
U8
HM62256BLP
U1A
74LS04
U1B
74LS04
U1C
74LS04
U1D
74LS04
U1E
74LS04
U1F
74LS04
U1G
74LS04
U2A
74LS08
U2B
74LS08
U2C
74LS08
U2D
74LS08
U2E
74LS08
U3
PIC12F1822-I/MC
J2
Conn_01x06
J3
Conn_01x02
X1
CXO_DIP8
SW1
SW_Push
JP1
for MC6802
for MC6808
Jumper for RAM
D1
LED_Small
R1,R2,R4 4.7K
R3 47K
R5 2.2K
C1 10µ
C2~C7 0.1µ
EPROM MAPPING
EPROM ADDRESS CPU ADDRESS
$4000–$5FFF $C000–$DFFF
$6000–$7FFF $E000–$FFFF
SBC6808 Rev5
Sheet: /
File: SBC6808_Rev5.kicad_sch
Title: SBC6808 Rev5
Size: A4
Date: 2023-05-21
Rev: REV5
KiCad E.D.A. kicad 7.0.2-0
Id: 1/1