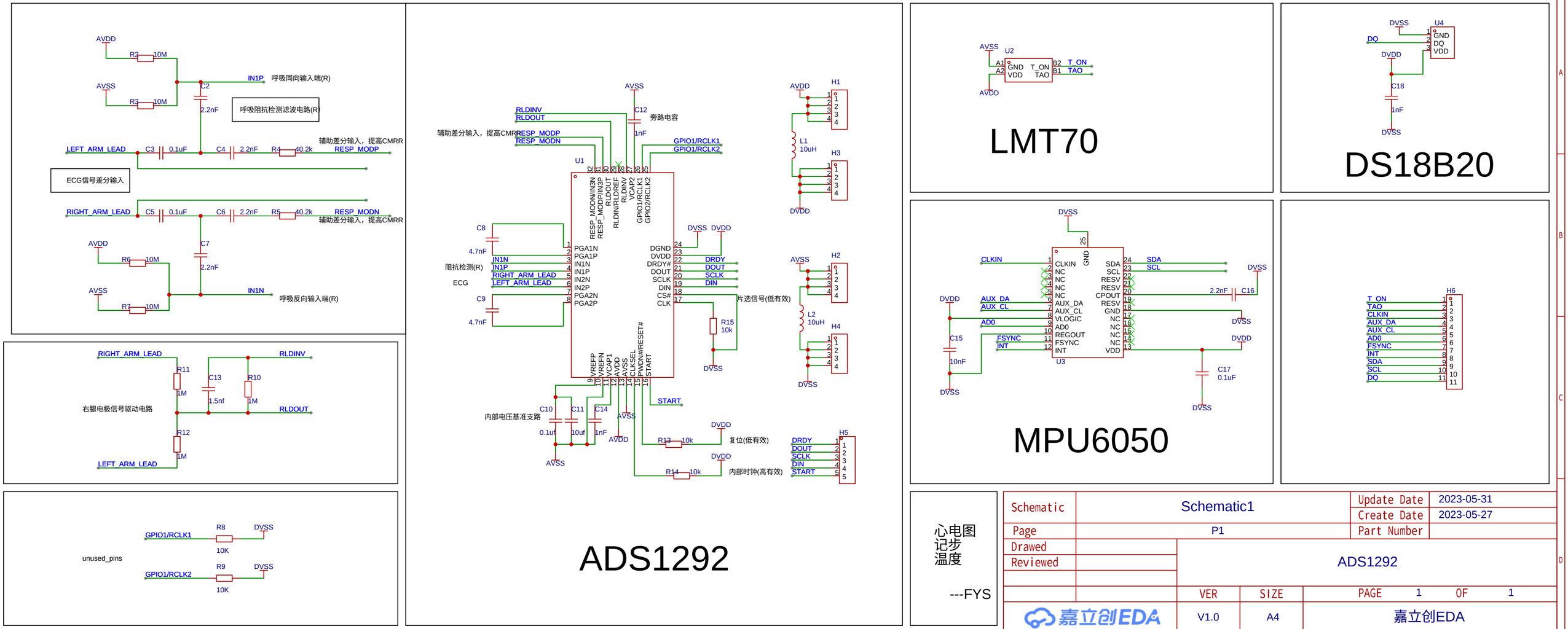


心电图
记步
温度

---FYS

| | | | |
|---|---|---|---|
| Schematic | Schematic1 | Update Date | 2023-05-31 |
| | | Create Date | 2023-05-27 |
| Page | P1 | Part Number | |
| Drawed | ADS1292 | | |
| Reviewed | | | |
| | VER | SIZE | PAGE 1 OF 1 |
| 嘉立创EDA | V1.0 | A4 | 嘉立创EDA |