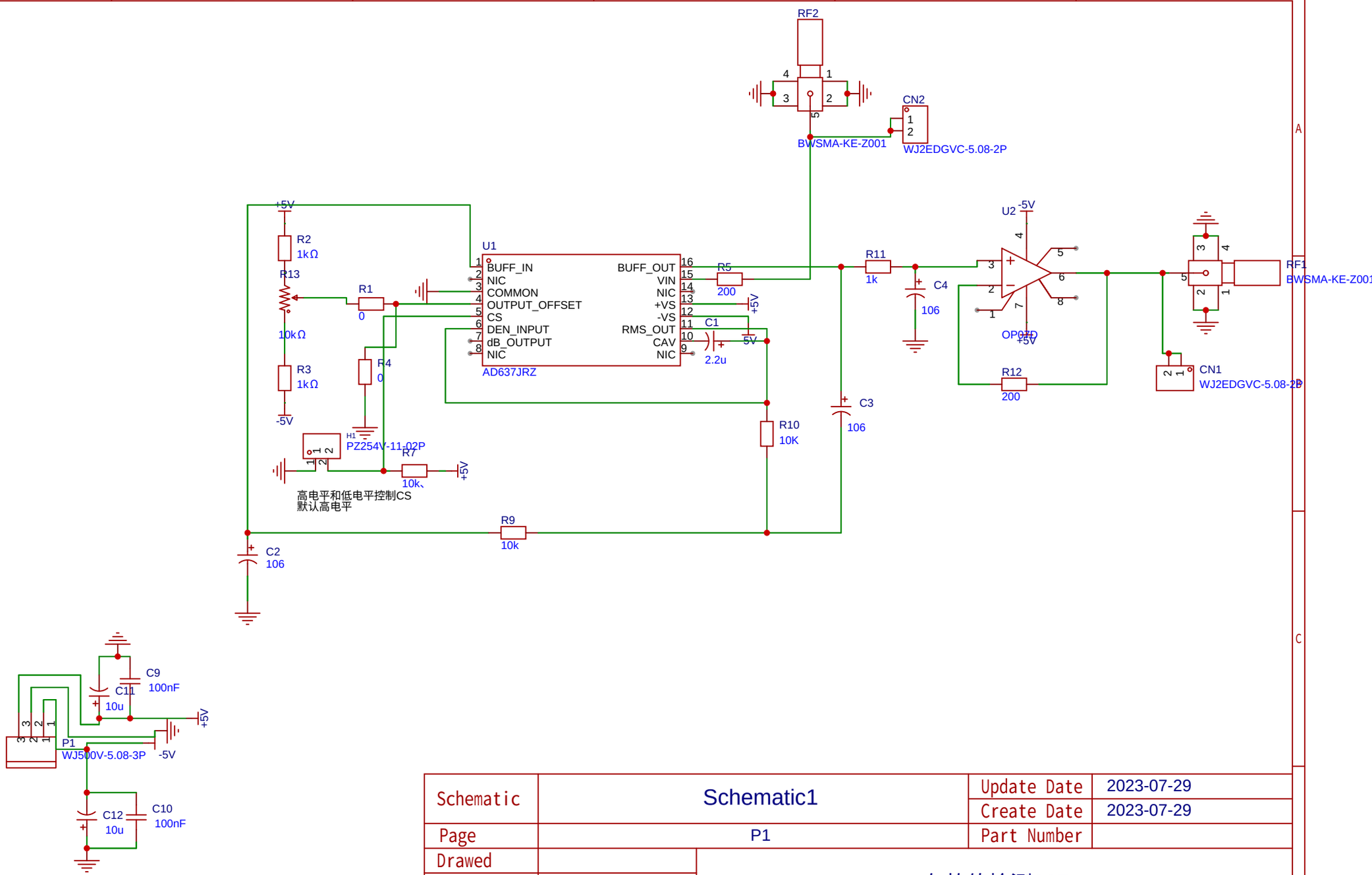

Schematic	Schematic1	Update Date	2023-07-29
		Create Date	2023-07-29
Page	P1	Part Number	
Drawed		有效值检测637	
Reviewed			
		VER	SIZE	PAGE 1 OF 1
嘉立创EDA		V1.0	A4	嘉立创EDA