BILL OF MATERIALS					
POSN	ITEM ID	NAME	DESCRIPTION	QTY	UM
1*	SKU0385133	RDISA0385133	DISK, SS304L, 18.13" OD X .625" THK, ROUGH MACHINED	1	EA

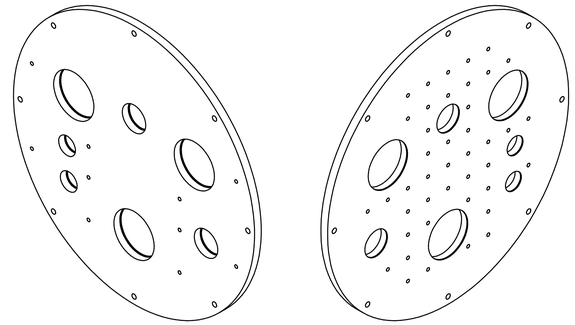

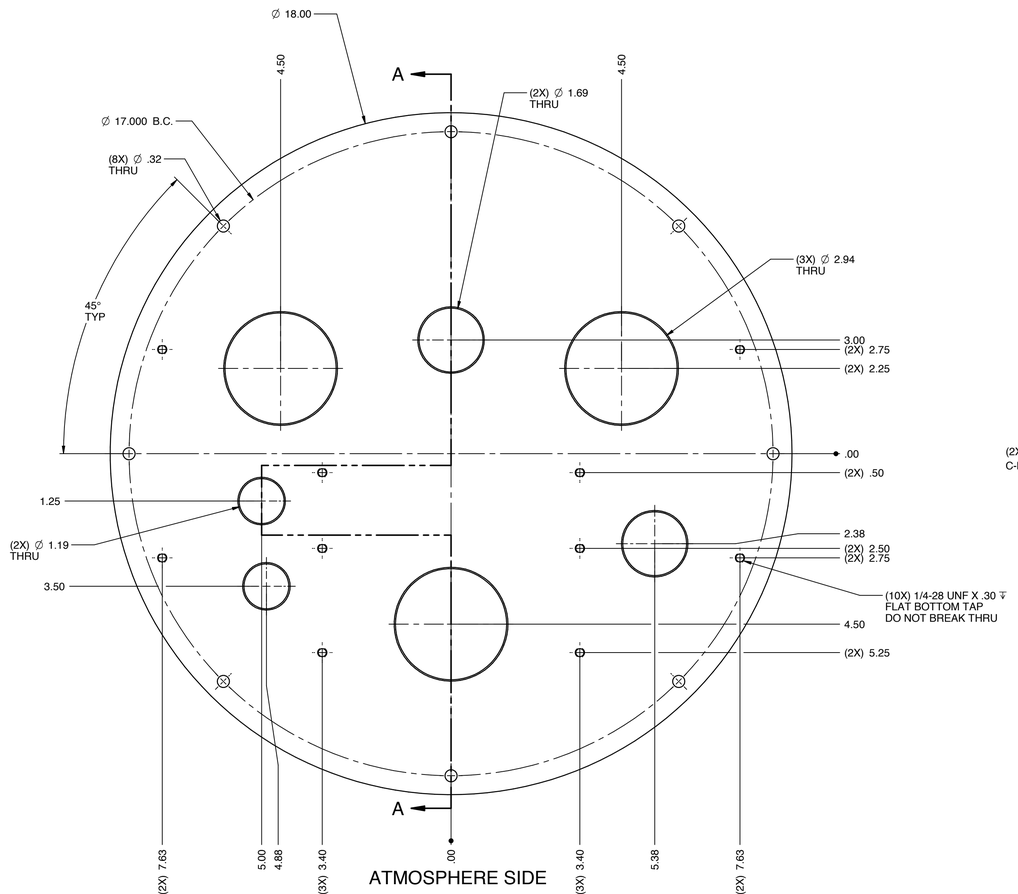

ATMOSPHERE SIDE

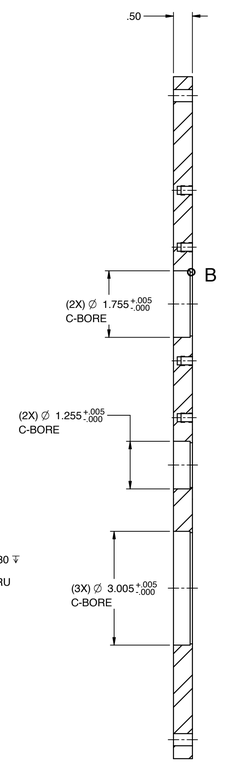

SECTION A-A

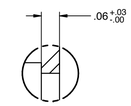

DETAIL B
4/1
TYP. 7 PLACES

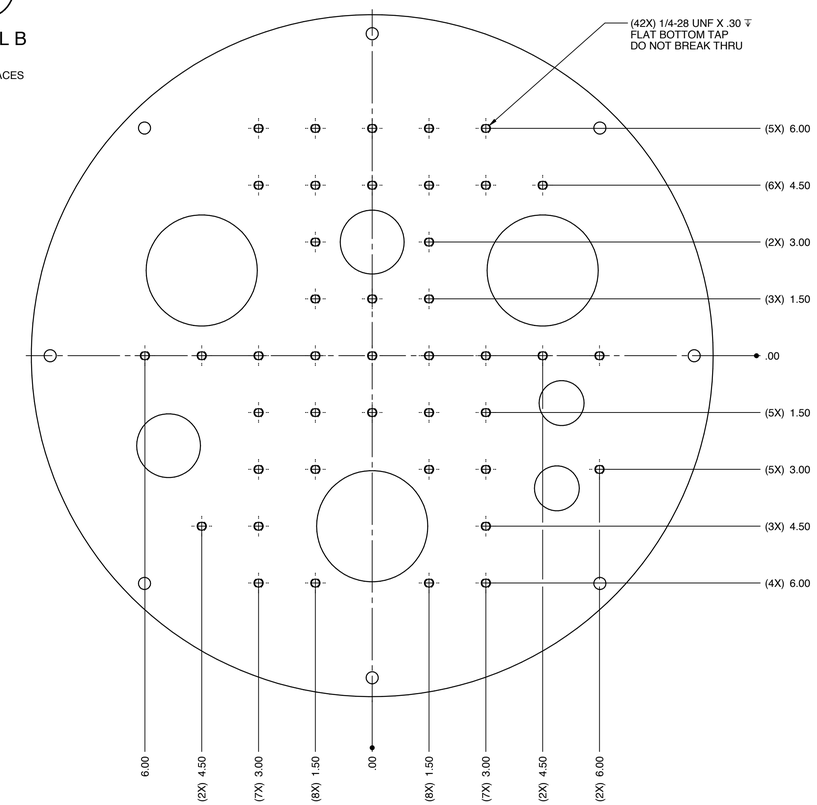

VACUUM SIDE

NOTES:

1. ALL DIMENSIONS ARE IN INCHES [MILLIMETERS], REFER TO TABLE 1 FOR STANDARD TOLERANCING INFORMATION.
2. DETAIL LEVEL: N/A
3. CLEANING PROCEDURE: MSW-DCP-100, LEVEL I
4. UNLESS OTHERWISE SPECIFIED, MACHINE FINISH: 63 Ra
5. UNLESS OTHERWISE SPECIFIED, SURFACE FINISH: N/A
6. Q.C. BY 1:1 DRAWING: No

SYMBOL LEGEND

REVISION	
ITEM BALLOON	
FOCAL POINT	
FOCAL POINT DESIGNATOR	
INSPECTION BALLOON	
CASE DESIGNATOR (MAX. TOOLING, UTILITY, ETC.)	
CENTER OF GRAVITY IDENTIFICATION	

UNLESS OTHERWISE SPECIFIED REFER TO DOCUMENT ENW-1201, KJLC STANDARD TOLERANCES AND MANUFACTURING PRACTICES

MACHINED TOLERANCES (UNLESS OTHERWISE NOTED)

TABLE 1	DIMENSIONS ARE IN INCHES			X in [X mm]
RANGE	1PL X.X	2PL X.XX	3PL X.XXX	
0 - 10	± 0.03	± 0.01	± 0.005	
> 10 - 20	± 0.06	± 0.02	± 0.010	
> 20 - 72	± 0.12	± 0.03	± 0.015	
> 72	± 0.25	± 0.06	± 0.030	
ANGULAR	± 30'			

TABLE 2	DIMENSIONS ARE IN MILLIMETERS			X mm [X in]
RANGE	0PL X	1PL X.X	2PL X.XX	
0 - 250	± 0.5	± 0.2	± 0.12	
> 250 - 500	± 1.0	± 0.5	± 0.25	
> 500 - 1800	± 1.5	± 0.75	± 0.40	
> 1800	± 2.0	± 1.5	± 0.75	
ANGULAR	± 30'			

FABRICATION/WELDMENT TOLERANCES (UNLESS OTHERWISE NOTED)

RANGE	0PL X	1PL X.X	2PL X.XX
0 - 300	± 0.8	± 0.50	
> 300 - 600	± 1.5	± 0.75	
> 600 - 1800	± 3.0	± 1.50	
> 1800	± 6.0	± 3.00	
ANGULAR	± 30'		

1925 Route 51
Jefferson Hills, PA
15025-3681 USA
Phone: 1-800-245-1656
Web: www.lesker.com

Kurt J. Lesker Company
Enabling Technology for a Better World

Austin House
Sidney Little Road
St. Leonards-on-Sea, East Sussex
TN38 9PU, UK
Phone: +44 1424 458100

NOTE: THIS DRAWING, AND ITS CONTENT, IS THE CONFIDENTIAL AND PROPRIETARY INFORMATION OF KURT J. LESKER COMPANY AND CAN NOT BE DISCLOSED OR USED EXCEPT WITH THE EXPRESS WRITTEN PERMISSION OF KURT J. LESKER COMPANY.

DESCRIPTION: BASE FLANGE, SS304L, FOR CF-SPL240

PRODUCT NAME	ITEM NUMBER	REV.
PTN1203183-01-05S001	SKU0385188	0

SIZE	FOR REFERENCE ONLY	SCALE	DOCUMENT TYPE	DESIGN GROUP	DRAWN BY	DATE
D		1/2	PART	MFG ME	BTZ	2/10/2023

MATERIAL SPECIFICATION	APPROX. WEIGHT	SHEET
STAINLESS STEEL, 304L	32.36 lbs	1 OF 1