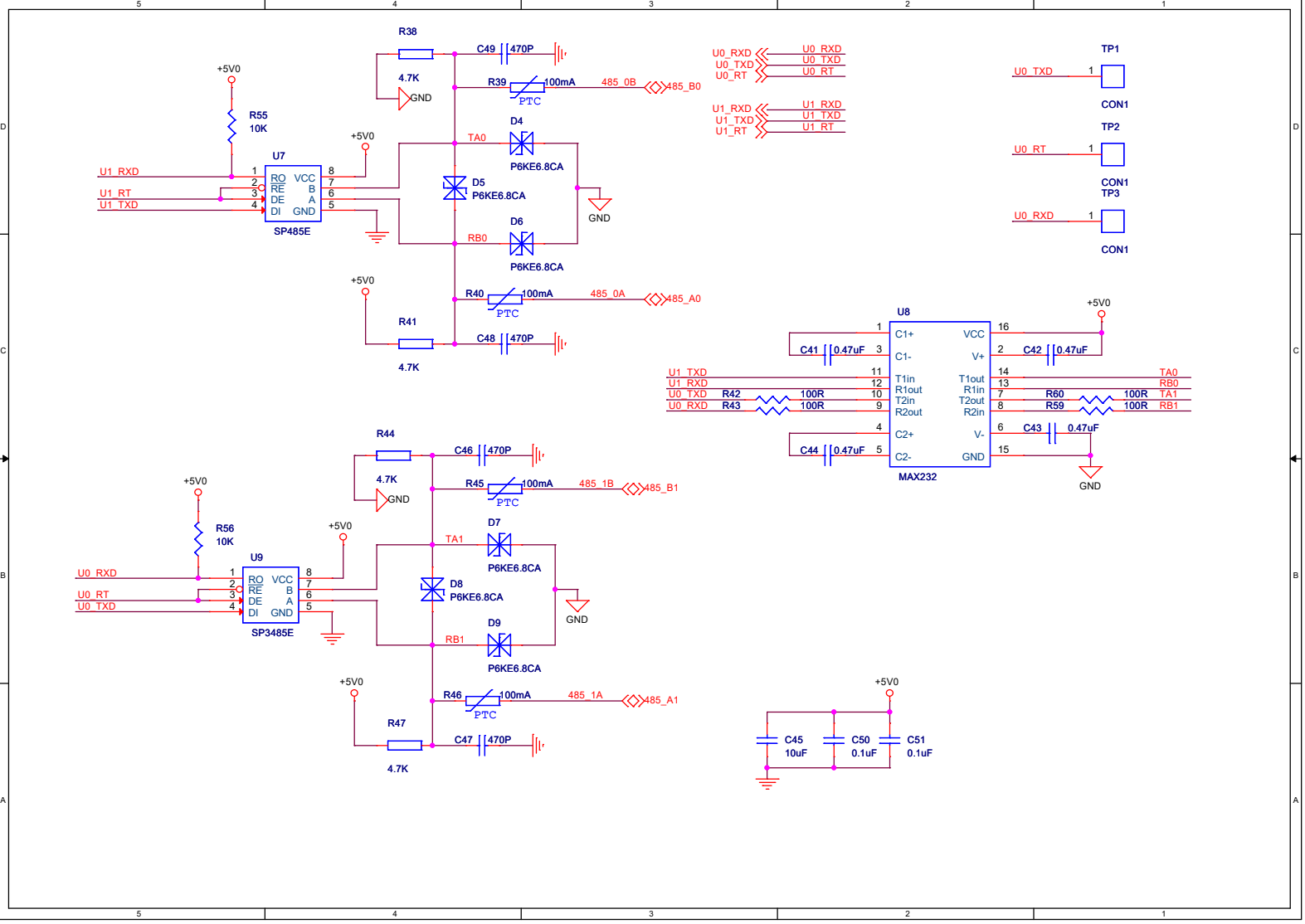
R38
4.7K
GND
C49
470P
R39
100mA
PTC
485_0B
485_B0
+5V0
R55
10K
U7
U1_RXD
U1_RT
U1_TXD
RO
RE
DE
DI
VCC
B
A
GND
SP485E
TA0
D4
P6KE6.8CA
D5
P6KE6.8CA
D6
P6KE6.8CA
RB0
R40
100mA
PTC
485_0A
485_A0
R41
4.7K
C48
470P
U0_RXD
U0_TXD
U0_RT
U1_RXD
U1_TXD
U1_RT
TP1
CON1
TP2
CON1
TP3
CON1
U8
C1+
C1-
C2+
C2-
VCC
V+
T1in
R1out
T2in
R2out
T1out
R1in
T2out
R2in
V-
GND
MAX232
C41
0.47uF
C42
0.47uF
C43
0.47uF
C44
0.47uF
R42
100R
R43
100R
R60
100R
R59
100R
TA0
RB0
TA1
RB1
R44
4.7K
C46
470P
R45
100mA
PTC
485_1B
485_B1
R56
10K
U9
SP3485E
D7
P6KE6.8CA
D8
P6KE6.8CA
D9
P6KE6.8CA
R46
100mA
PTC
485_1A
485_A1
R47
4.7K
C47
470P
C45
10uF
C50
0.1uF
C51
0.1uF

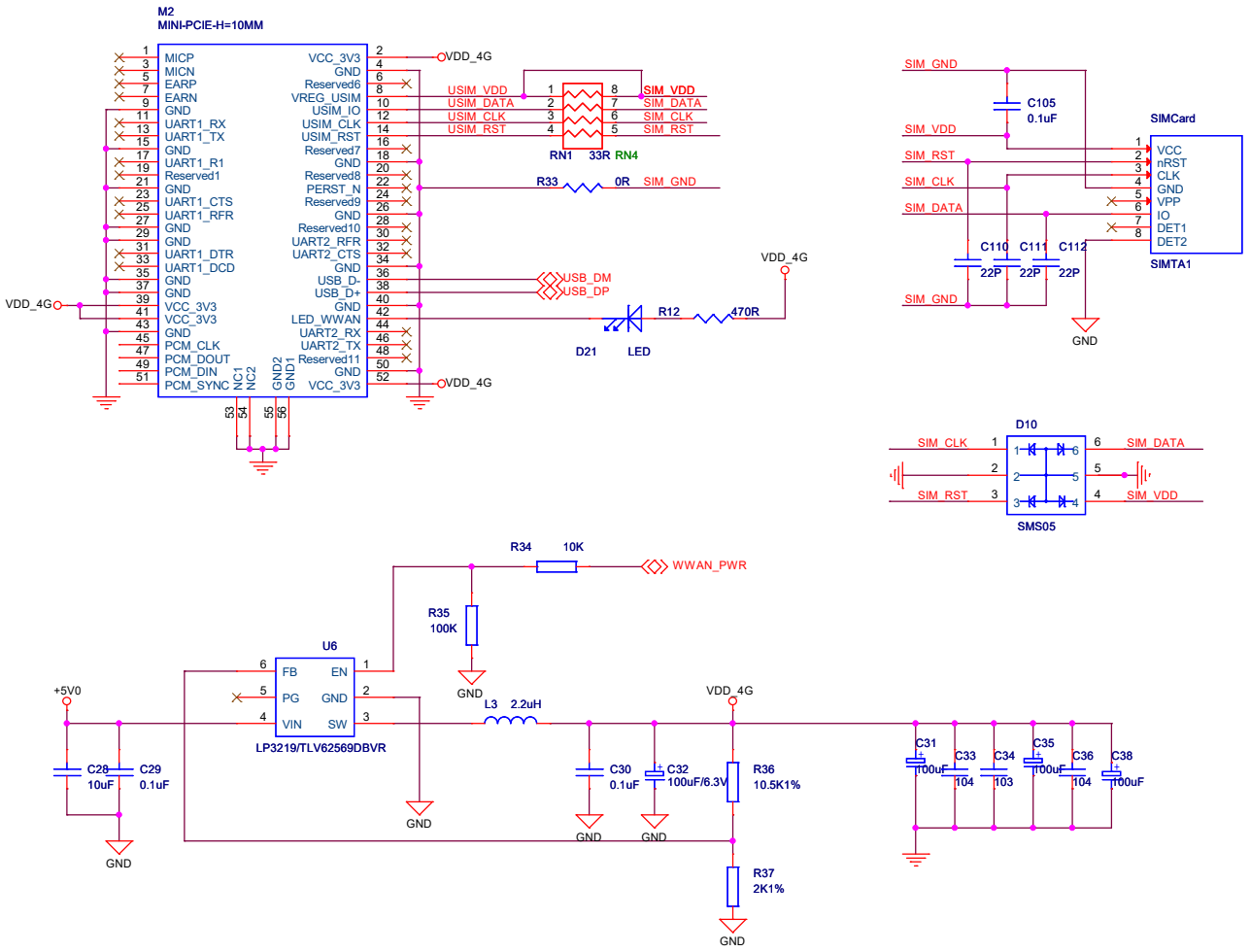
M2
MINI-PCIE-H=10MM
MICP
MICN
EARP
EARN
GND
UART1_RX
UART1_TX
GND
UART1_R1
Reserved1
GND
UART1_CTS
UART1_RFR
GND
GND
UART1_DTR
UART1_DCD
GND
GND
VCC_3V3
VCC_3V3
GND
PCM_CLK
PCM_DOUT
PCM_DIN
PCM_SYNC
NC1
NC2
GND2
GND1
VCC_3V3
GND
Reserved6
VREG_USIM
USIM_IO
USIM_CLK
USIM_RST
Reserved7
GND
Reserved8
PERST_N
Reserved9
GND
Reserved10
UART2_RFR
UART2_CTS
GND
USB_D-
USB_D+
GND
LED_WWAN
UART2_RX
UART2_TX
Reserved11
GND
VCC_3V3
VDD_4G
VDD_4G
VDD_4G
USIM_VDD
USIM_DATA
USIM_CLK
USIM_RST
SIM_VDD
SIM_DATA
SIM_CLK
SIM_RST
RN1
33R
RN4
R33
0R
SIM_GND
USB_DM
USB_DP
VDD_4G
R12
470R
D21
LED
SIM_GND
C105
0.1uF
SIM_VDD
SIM_RST
SIM_CLK
SIM_DATA
SIMCard
VCC
nRST
CLK
GND
VPP
IO
DET1
DET2
SIMTA1
C110
C111
C112
22P
22P
22P
SIM_GND
GND
D10
SIM_CLK
SIM_RST
SIM_DATA
SIM_VDD
SMS05
R34
10K
WWAN_PWR
R35
100K
GND
U6
FB
EN
PG
GND
VIN
SW
LP3219/TLV62569DBVR
+5V0
C28
10uF
C29
0.1uF
GND
GND
L3
2.2uH
VDD_4G
C30
0.1uF
C32
100uF/6.3V
R36
10.5K1%
GND
GND
R37
2K1%
GND
C31
100uF
C33
104
C34
103
C35
100uF
C36
104
C38
100uF

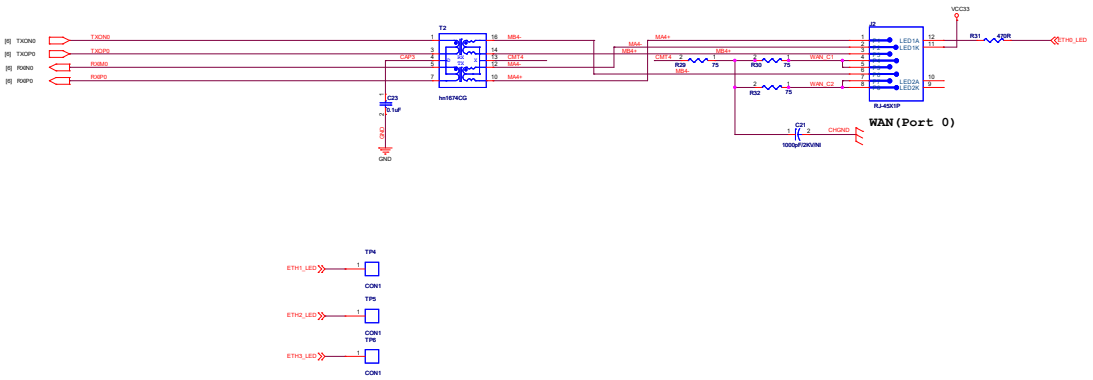
[5] TXCN0
[5] TXCP0
[5] RXIN0
[5] RXIP0
TXCN0
TXCP0
RXIM0
RXIP0
T2
hm1674CG
CAP3
C23
0.1uF
GND
MB4-
MB4+
MA4-
MA4+
CMT4
R29
75
R30
75
R32
75
WAN_C1
WAN_C2
C21
1000pF/2KV/N
CHGND
J2
RJ-45X1P
LED1A
LED1K
LED2A
LED2K
VCC33
R31
0ΩR
ETH0_LED
WAN(Port 0)
ETH1_LED
ETH2_LED
ETH3_LED
TP4
TP5
TP6
CON1

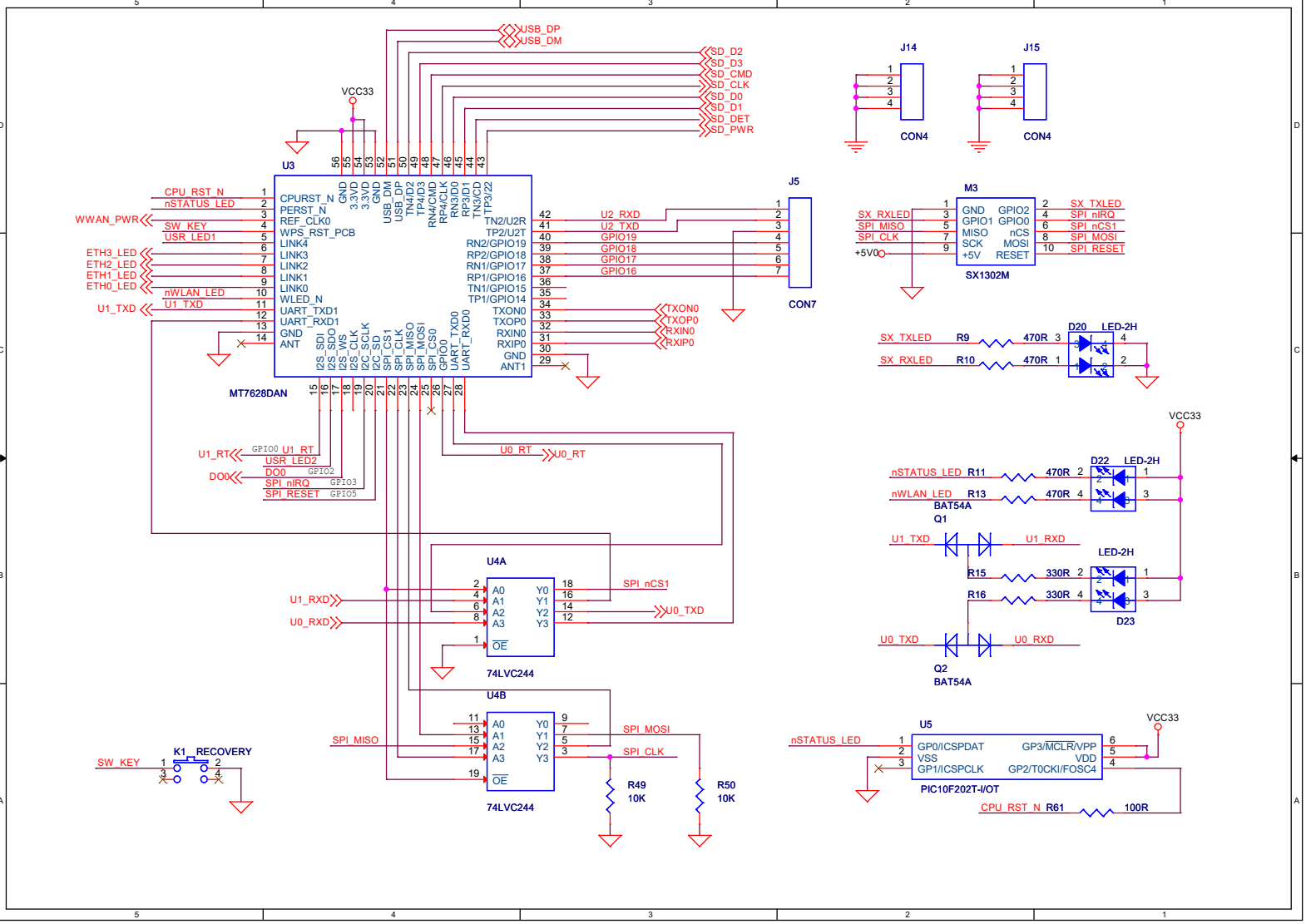
U3
MT7628DAN
CPURST_N
PERST_N
REF_CLK0
WPS_RST_PCB
LINK4
LINK3
LINK2
LINK1
LINK0
WLED_N
UART_TXD1
UART_RXD1
GND
ANT
TN2/U2R
TP2/U2T
RN2/GPIO19
RP2/GPIO18
RN1/GPIO17
RP1/GPIO16
TN1/GPIO15
TP1/GPIO14
TXON0
TXOP0
RXIN0
RXIP0
GND
ANT1
VCC33
USB_DP
USB_DM
SD_D2
SD_D3
SD_CMD
SD_CLK
SD_D0
SD_D1
SD_DET
SD_PWR
CPU_RST_N
nSTATUS_LED
WWAN_PWR
SW_KEY
USR_LED1
ETH3_LED
ETH2_LED
ETH1_LED
ETH0_LED
nWLAN_LED
U1_TXD
U2_RXD
U2_TXD
GPIO19
GPIO18
GPIO17
GPIO16
TXON0
TXOP0
RXIN0
RXIP0
J5
CON7
J14
CON4
J15
CON4
M3
SX1302M
SX_RXLED
SPI_MISO
SPI_CLK
+5V0
SX_TXLED
SPI_nIRQ
SPI_nCS1
SPI_MOSI
SPI_RESET
SX_TXLED
SX_RXLED
R9
R10
470R
D20
LED-2H
U1_RT
DO0
U0_RT
U1_RT
USR_LED2
DO0
SPI_nIRQ
SPI_RESET
GPIO0
GPIO2
GPIO3
GPIO5
VCC33
nSTATUS_LED
nWLAN_LED
R11
R13
470R
D22
LED-2H
BAT54A
Q1
U1_TXD
U1_RXD
LED-2H
R15
R16
330R
D23
U0_TXD
U0_RXD
Q2
BAT54A
U4A
74LVC244
U1_RXD
U0_RXD
SPI_nCS1
U0_TXD
U4B
74LVC244
SPI_MISO
SPI_MOSI
SPI_CLK
R49
10K
R50
10K
K1_RECOVERY
SW_KEY
U5
PIC10F202T-I/OT
nSTATUS_LED
GP0/ICSPDAT
VSS
GP1/ICSPCLK
GP3/MCLR/VPP
VDD
GP2/T0CKI/FOSC4
VCC33
CPU_RST_N
R61
100R

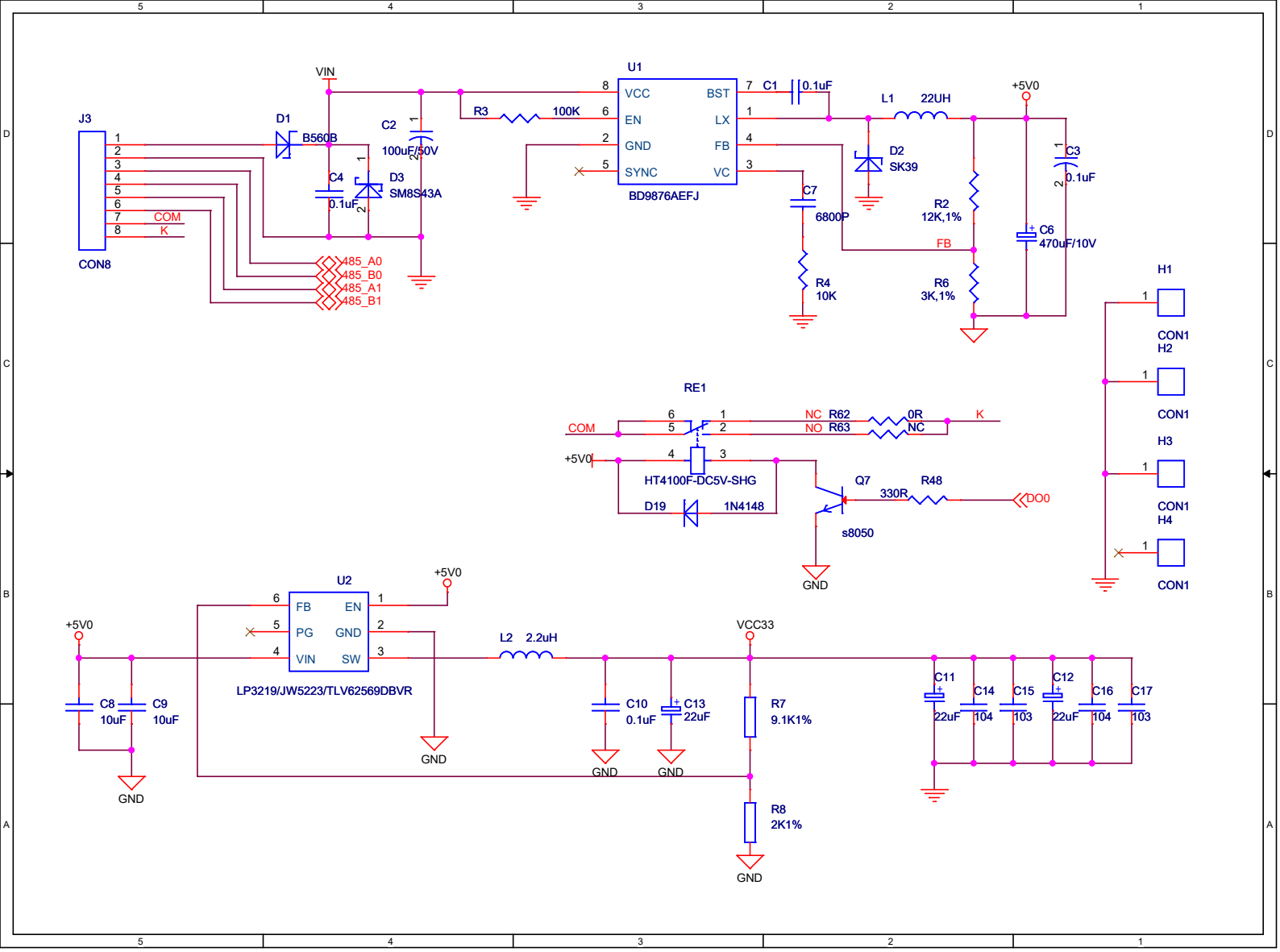
J3
CON8
COM
K
D1
B560B
VIN
C2
100uF/50V
C4
0.1uF
D3
SM8S43A
485_A0
485_B0
485_A1
485_B1
R3
100K
U1
VCC
EN
GND
SYNC
BST
LX
FB
VC
BD9876AEFJ
C1
0.1uF
L1
22UH
D2
SK39
C7
6800P
R4
10K
R2
12K,1%
R6
3K,1%
FB
+5V0
C3
0.1uF
C6
470uF/10V
H1
CON1
H2
CON1
H3
CON1
H4
CON1
RE1
COM
+5V0
NC R62
NO R63
0R
NC
K
HT4100F-DC5V-SHG
D19
1N4148
Q7
s8050
330R
R48
DO0
GND
U2
FB
PG
VIN
EN
GND
SW
LP3219/JW5223/TLV62569DBVR
+5V0
L2 2.2uH
VCC33
C8
10uF
C9
10uF
C10
0.1uF
C13
22uF
R7
9.1K1%
R8
2K1%
C11
22uF
C14
104
C15
103
C12
22uF
C16
104
C17
103

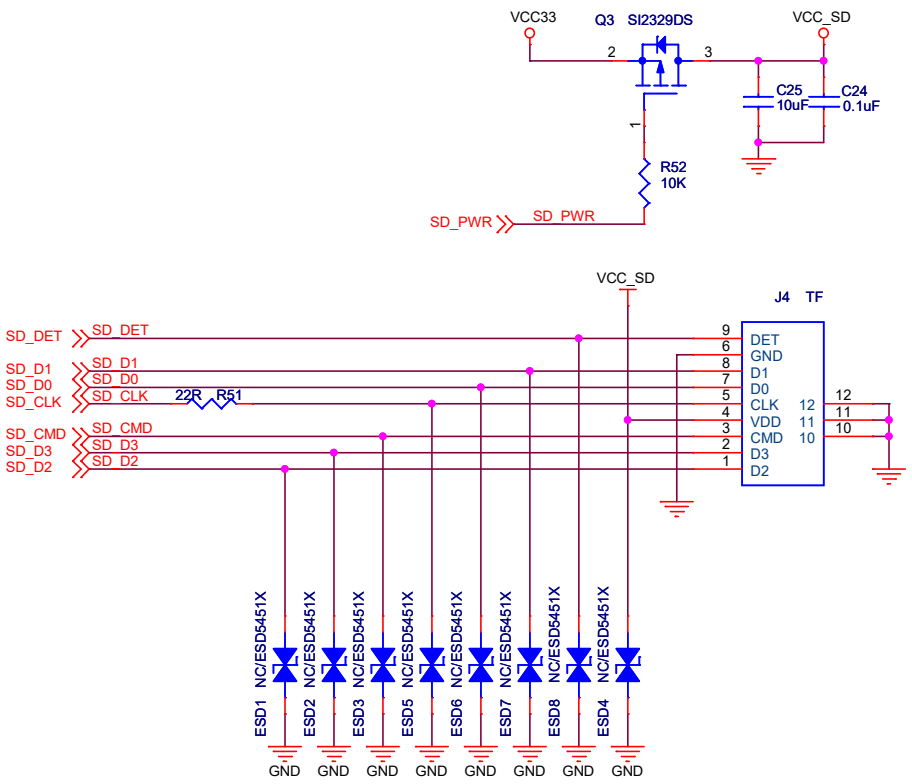
VCC33
Q3
SI2329DS
VCC_SD
2
3
1
C25
10uF
C24
0.1uF
R52
10K
SD_PWR
SD_PWR
VCC_SD
J4
TF
SD_DET
SD_DET
SD_D1
SD_D0
SD_CLK
SD_D1
SD_D0
SD_CLK
22R
R51
SD_CMD
SD_D3
SD_D2
SD_CMD
SD_D3
SD_D2
9
6
8
7
5
4
3
2
1
DET
GND
D1
D0
CLK
VDD
CMD
D3
D2
12
11
10
12
11
10
NC/ESD5451X
ESD1
ESD2
ESD3
ESD5
ESD6
ESD7
ESD8
ESD4
GND