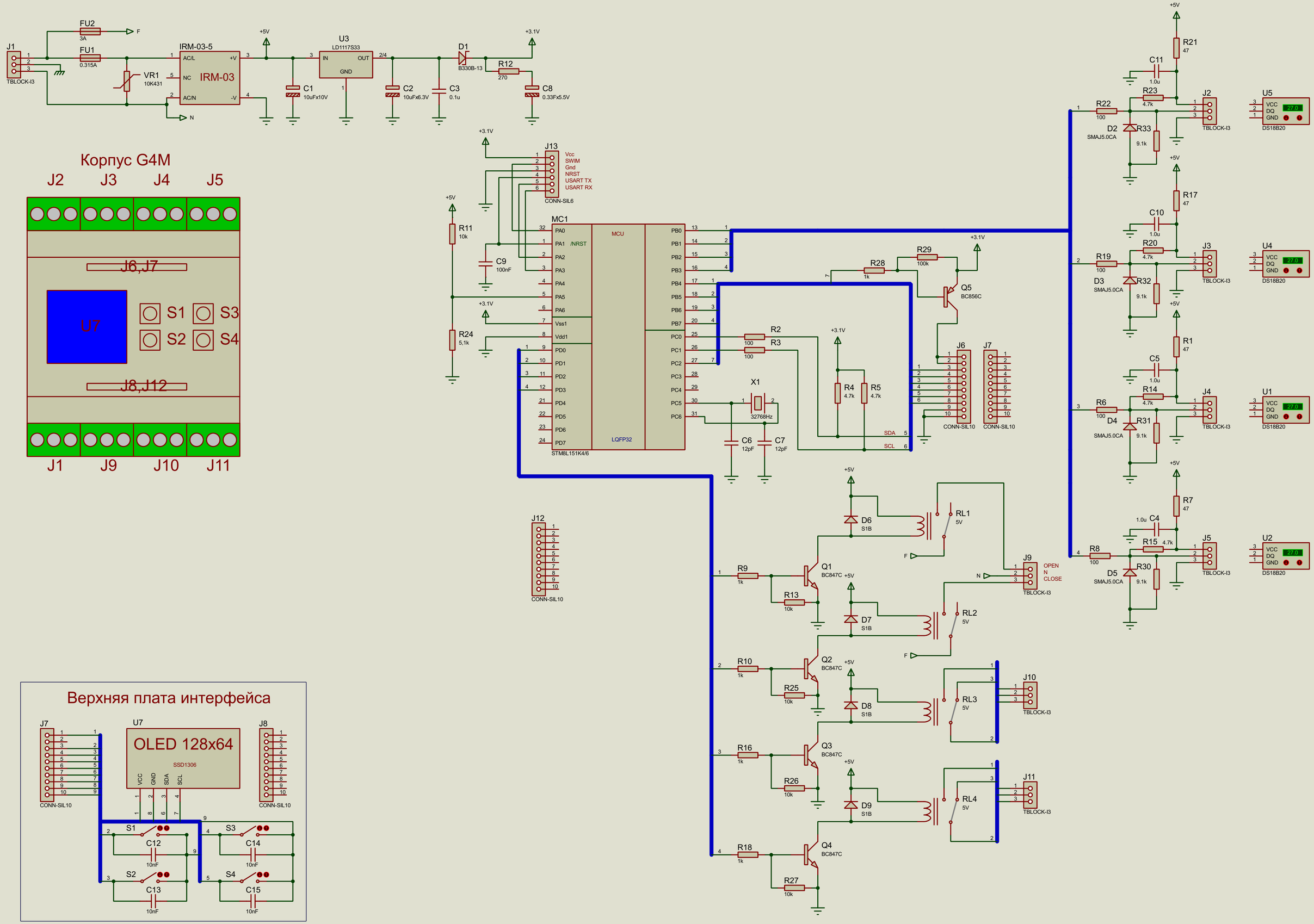
J1
TBLOCK-I3
FU2
3A
FU1
0.315A
VR1
10K431
IRM-03-5
IRM-03
AC/L
NC
AC/N
+V
-V
F
N
+5V
U3
LD1117S33
IN
OUT
GND
C1
10uFx10V
C2
10uFx6.3V
C3
0.1u
D1
B330B-13
R12
270
+3.1V
C8
0.33Fx5.5V
Корпус G4M
J2
J3
J4
J5
J6,J7
U7
S1
S2
S3
S4
J8,J12
J1
J9
J10
J11
J13
Vcc
SWIM
Gnd
NRST
USART TX
USART RX
CONN-SIL6
MC1
MCU
LQFP32
STM8L151K4/6
PA0
PA1
/NRST
PA2
PA3
PA4
PA5
PA6
Vss1
Vdd1
PD0
PD1
PD2
PD3
PD4
PD5
PD6
PD7
PB0
PB1
PB2
PB3
PB4
PB5
PB6
PB7
PC0
PC1
PC2
PC3
PC4
PC5
PC6
R11
10k
R24
5,1k
C9
100nF
R2
R3
100
X1
32768Hz
C6
12pF
C7
12pF
R4
4.7k
R5
4.7k
R28
1k
R29
100k
Q5
BC856C
SDA
SCL
J6
J7
CONN-SIL10
J12
R21
47
C11
1.0u
R23
4.7k
R22
100
D2
SMAJ5.0CA
R33
9.1k
J2
TBLOCK-I3
U5
VCC
DQ
GND
27.0
DS18B20
R17
47
C10
1.0u
R20
4.7k
R19
100
D3
SMAJ5.0CA
R32
9.1k
J3
U4
R1
47
C5
1.0u
R14
4.7k
R6
100
D4
SMAJ5.0CA
R31
9.1k
J4
U1
R7
47
C4
1.0u
R15
4.7k
R8
100
D5
SMAJ5.0CA
R30
9.1k
J5
U2
D6
S1B
RL1
5V
D7
S1B
RL2
5V
D8
S1B
RL3
5V
D9
S1B
RL4
5V
J9
OPEN
N
CLOSE
J10
J11
R9
1k
R13
10k
Q1
BC847C
R10
1k
R25
10k
Q2
BC847C
R16
1k
R26
10k
Q3
BC847C
R18
1k
R27
10k
Q4
BC847C
Верхняя плата интерфейса
J7
CONN-SIL10
U7
OLED 128x64
SSD1306
VCC
GND
SDA
SCL
J8
CONN-SIL10
S1
S2
S3
S4
C12
C13
C14
C15
10nF