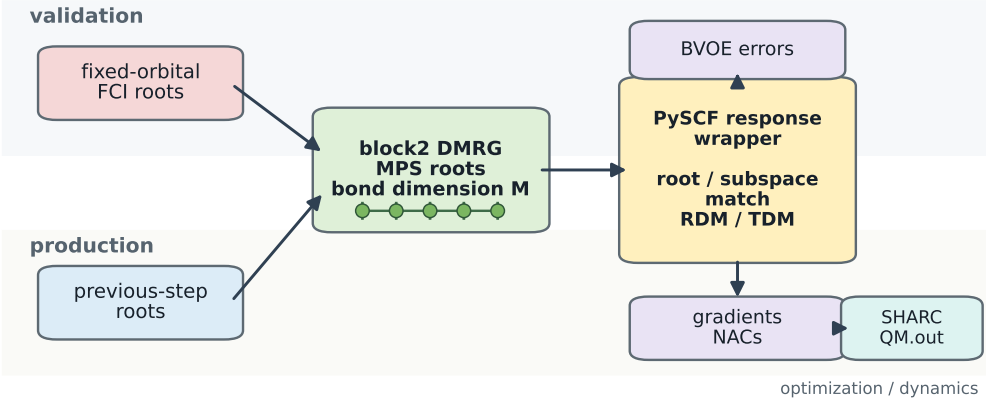DMRG-SA-CASSCF response workflow