Supporting Information

A Scale-Dependent Techno-Economic Analysis of CO_2 Capture and Electroreduction to Ethylene

Théo Alerte[1,2†], Adriana Gaona[3†], Jonathan P. Edwards[4†], Christine M. Gabardo[4], Colin P. O'Brien[4], Joshua Wicks[2], Loann Bonnenfant[1,2], Armin Sedighian Rasouli[2], Daniel Young[4], Jehad Abed[2], Luke Kershaw[4], Yurou Celine Xiao[4], Amitava Sarkar[5,6], Shaffiq A. Jaffer[1], Moritz W. Schreiber[7], David Sinton[4]*, Heather L. MacLean[3]*, & Edward H. Sargent[2]*

[1]TotalEnergies American Services Inc., Hopkinton, Massachusetts, 01748, United States

[2]Department of Electrical and Computer Engineering, University of Toronto, Toronto, Ontario, M5S 3G4, Canada

[3]Department of Civil and Mineral Engineering, University of Toronto, Toronto, Ontario, M5S 1A4, Canada

[4]Department of Mechanical and Industrial Engineering, University of Toronto, Toronto, Ontario, M5S 3G8, Canada

[5]TotalEnergies EP Research & Technology USA, LLC., Houston, Texas, 77002, United States

[6]SUNCAT Center for Interface Science and Catalysis, Department of Chemical Engineering, Stanford University, Stanford, California, 94305, United States

[7]TotalEnergies One Tech Belgium, Seneffe, 7181, Belgium

Corresponding Authors

*Email: ted.sargent@utoronto.ca, heatherl.maclean@utoronto.ca, and sinton@mie.utoronto.ca

[†]T.A., A.G., and J.P.E. contributed equally to this work.

This Supporting Information document includes: 46 pages, 15 figures, and 28 tables.

Table of Contents

Supplemental Note 1: Selection of Separation Technology S3

Supplemental Note 2: Aspen Plus Model Specifications S5

Supplemental Note 3: CO_2 Electrolyzer Performance S15

Figure S5. C_2H_4 absorption in the downstream CO_2 recovery unit with different capture solutions (30 wt.%). S18

Figure S6. CO absorption in the downstream CO_2 recovery unit at different solid oxide electrolyzer cell (SOEC) production rates. S19

Figure S7. Ratio of purified C_2H_4 to electrochemically produced C_2H_4 (BPM configuration). S19

Supplemental Note 4: Techno-Economic Model S20

Supplemental Note 5: Aspen Plus Model of Benchmark Process S26

Figure S13. TAC of C_2H_4 production from CO_2RR compared to the SG benchmark process with and without CO_2 capture (50,000 tonneC_2H_4/year). S37

Supplemental Note 6: Comparison to CO_2RR TEA Literature S38

Table S28. Values used in the sensitivity analysis S40

Figure S15. Roadmap to improve CO_2RR profitability via improvements in technical, deployment, and economic factors (Mass allocated TAC, break-even indicated by black line). S41

References S42

Supplemental Note 1: Selection of Separation Technology

The separation technologies were assessed based on TRL (**Table S1**)[1,2]. This assessment was carried out quantitatively, meaning that the TRL levels were determined according to available data, and the scale of operation: lab, pilot or industrial unit. This comparison is relatively indicative and not absolute. Sometimes a technology may have a high TRL for binary mixtures but more complex mixtures, such as the cathode tail gas mixture ($CO/H_2/CO_2/C_2H_4$), need further assessment. For example, it is easy to separate H_2/CO with a membrane, but if CO_2 is added to the mixture, then the membrane application may be jeopardized. Therefore, it is important to know the exact composition of the stream and the application range. Moreover, all the technologies are not equal in terms of performance and degree of separation. Therefore, it is not trivial to select separation technology and some decisions need to be made based on data availability.

Table S1. TRL assessment of separation technologies for different stages.

Separation Step	Type	Description	TRL	Ref
H_2O Removal	Absorption	Triethylene glycol absorption & regeneration	9	3
	Adsorption	TSA with desiccant (alumina, silica gel, molecular sieves)	9	3
	Distillation	Cooling the gas to facilitate condensation	9	3
	Membrane	Pebax / SPEEK polyethylene oxide	8	4–6
CO_2 Recovery	Absorption	MEA absorption & regeneration	9	7–9
		Alternative amine absorption (e.g., DGA, MDEA, DIGA, DEA) & regeneration	9	7–9
	Adsorption	PSA with zeolite/carbon/activated alumina	8	8–10
	Distillation	Cooling the gas to facilitate CO_2 condensation	9	11,12
	Membrane	Polyamides, facilitated transport, mixed matrix, carbon molecular sieves membrane	6	6,13,14
C_2H_4 Recovery	Absorption	Ag(I) or Cu(I) absorption & regeneration	5	15–17
	Adsorption	Zeolite molecular sieve	5	15–19
		Cu(I) or Ag(I) TSA/PSA	4	15–17

	Distillation	Cooling the gas to facilitate C_2H_4 condensation	9	[15–17]
	Membrane	FTM membrane doped with Ag(I)	4	[15–17]
		Polymeric membrane	4	[15–17]
CO Recovery	Absorption	Cu(I) ammonium solution & regeneration (i.e., COSORB)	9	[20]
	Adsorption	Zeolite/activated carbon PSA/TSA	9	[20]
	Distillation	Cooling the gas to facilitate CO condensation	9	[20]
	Membrane	FTM membrane doped with Ag(I)	2	[20,21]
		Polymeric membrane	2	[20,21]
	Water gas shift	$CO + H_2O \rightarrow CO_2 + H_2$		n.a.
H_2 Recovery	Adsorption	Activated carbon & zeolite PSA	9	[6,22,23]
	Distillation	Cooling the gas to facilitate H_2 condensation	9	
	Membrane	Polymeric membrane	7	
N_2 Removal	Adsorption	Activated carbon & zeolite PSA	9	[24,25]
	Distillation	Cooling the gas to facilitate N_2 condensation	9	
	Membrane	Polymeric membrane	9	
C_2H_5OH Recovery	Distillation	Azeotropic with cyclohexane or benzene (99 wt.%)	9	[26]
		Extractive with ethylene glycol (99 wt.%)	6	
		Normal distillation (95 wt.%)	9	
	Adsorption	PSA	9	
	Membrane	Pervaporation	4	

Supplemental Note 2: Aspen Plus Model Specifications

This section provides more details about the chemical process simulations: CO_2 recovery units (**Figure S1**, **Table S2**, **Table S3**, **Table S4**), TEG-based H_2O removal unit (**Figure S2**, **Table S5**), cryogenic distillation unit for C_2H_4 recovery (**Figure S3**, **Table S6**), and double distillation unit for C_2H_5OH recovery (**Figure S4**, **Table S7**, **Table S8**). A list of variables adjusted during the simulations as well as a component list are also provided (**Table S9, Table S10**).

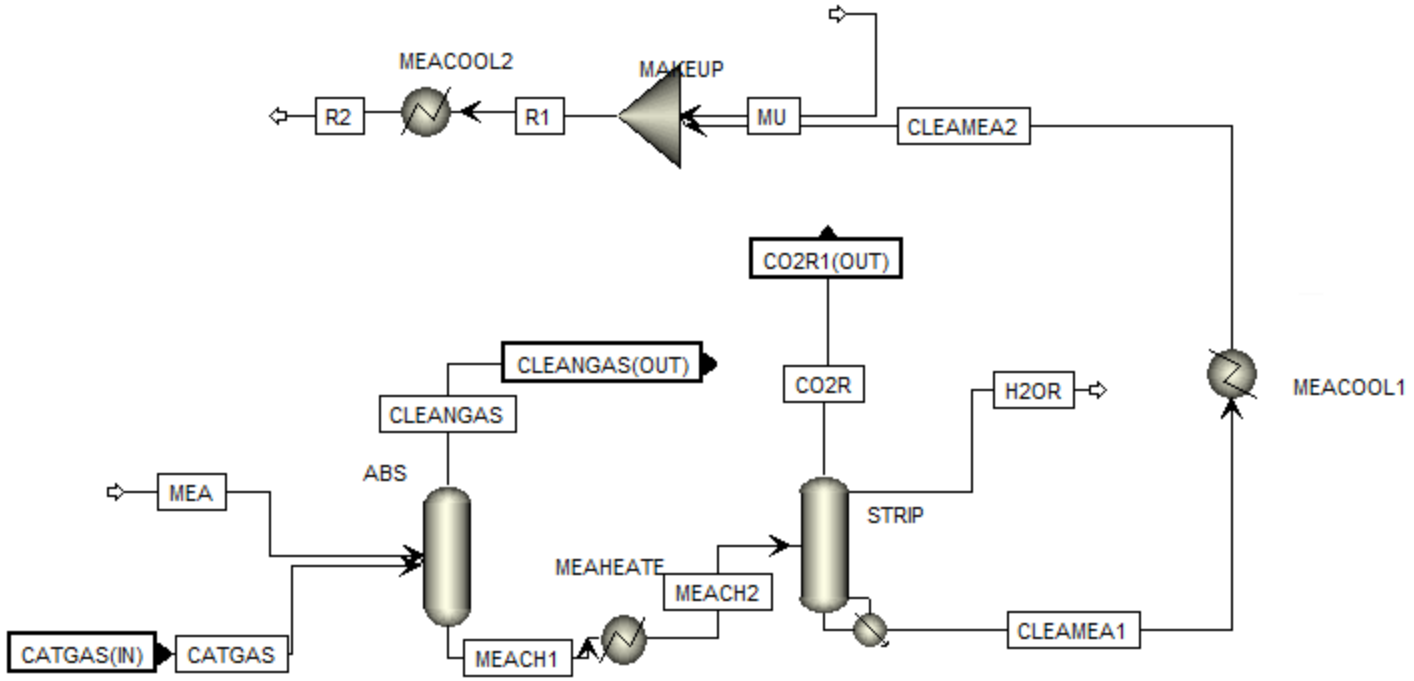

Figure S1. The MEA-based CO_2 recovery units as modeled in Aspen Plus: upstream, downstream cathodic, and downstream anodic (Aspen ID: *CO2SEP1, CO2SEP2,* and *CO2SEP3*, respectively).

Table S2. Reaction kinetics for the MEA-based CO_2 recovery units.

Label	Type	n°	Reaction	k	E	Ref
				n.a	Mbtu/lbmol	
MEA-CHEM	Equilibrium	1	$2H_2O \leftrightarrow H_3O^+ + OH^-$	n.a	n.a	Aspen Equilibrium Database
		2	$CO_2 + 2H_2O \leftrightarrow HCO_3^- + H_3O^+$			
		3	$HCO_3^- + H_2O \leftrightarrow CO_3^{-2} + H_3O^+$			
		4	$MEAH^+ + H_2O \leftrightarrow MEA + H_3O^+$			
		5	$MEACOO^- + H_2O \leftrightarrow MEA + HCO_3^-$			
MEA-RXN	Kinetic	1	$OH^- + CO_2 \rightarrow HCO_3^-$	1.33e+17	23.84	[27–29]
		2	$HCO_3^- \rightarrow OH^- + CO_2$	6.63e+16	46.18	
		3	$MEA + CO_2 + H_2O \rightarrow MEACOO^- + H_3O^+$	3.02e+14	17.74	
		4	$MEACOO^- + H_3O^+ \rightarrow MEA + CO_2 + H_2O$	5.52e+23	29.73	
	Equilibrium	n.a	MEA-CHEM1+ MEA-CHEM3 + MEA-CHEM4	n.a	n.a	
MEA-STP	Kinetic	n.a	MEA-RXN1 + MEA-RXN2 + MEA-RXN3	n.a	n.a	
		1	$MEACOO^- + H_3O^+ \rightarrow MEA + CO_2 + H_2O$	6.49e+27	41	
	Equilibrium		MEA-CHEM1+ MEA-CHEM3 + MEA-CHEM4	n.a	n.a	

Table S3. Fixed parameters for the MEA-based CO_2 recovery units (equation of state: NRTL-RK)[27–29]. *For the 50,000 tonneC_2H_4/year configurations, a liquid hold-up of 1e-4 m^3 yielded very poor absorption and an unreasonably large MEA flow rate. Incorrect liquid hold-up selection will impact the result accuracy,[30] so for these simulations the liquid hold-up was increased to 1e-2 m^3.

Process Block	Aspen ID	Aspen Pre Built Model	T (°C)	P (bar)	Mass Reflux Ratio	No. of Stages	Feed Stage	Reaction ID	Liquid Hold-up (m^3)
Absorber	*ABS*	Radfrac Equilibrium No Condenser No Reboiler	40	1	n.a	20	MEA:1 FLUEGAS, ANOGAS, CATGAS: 20	MEA-RXN: Stage 1-20	1 e-4*
Distillation	*DIST*	Radfrac Equlibirum Partial Vapor-Liquid Condenser Kettles	n.a	1	1	20	20	MEA-CHEM: Stage 1-1 & 20-20 MEA-STP: Stage 2-19	1e-6
Pre-distillation Heater	*MEAHEATER*	Heater	90	1	n.a	n.a	n.a	MEA-CHEM	n.a.
Post-distillation Coolers	*MEACOOL1*	Heater	25	1	n.a	n.a	n.a	MEA-CHEM	n.a.
	MEACOOL2	Heater	25	1	n.a	n.a	n.a	MEA-CHEM	n.a.

Table S4. Specifications used to reverse engineer the upstream CO_2 capture unit based on CO_2 recycled from downstream units.

Specification Name	Variable	Aspen ID Stream	Value
CO2F	CO_2 mass flow rate at the outlet of the stripper	*CO2SEP.CO21*	Fixed according to scenario & scale
	Lean amine flow rate feed to the absorber	*CO2SEP.MEA*	Changed according to above
CO2TAIL	Mass Frac at the outlet of the absorber of CO_2 leftover in the cleaned gas	*CO2SEP.TAILGAS*	Fixed at 0.01383
	Flue gas feed to the absorber	*FLUEGAS*	Changed according to above

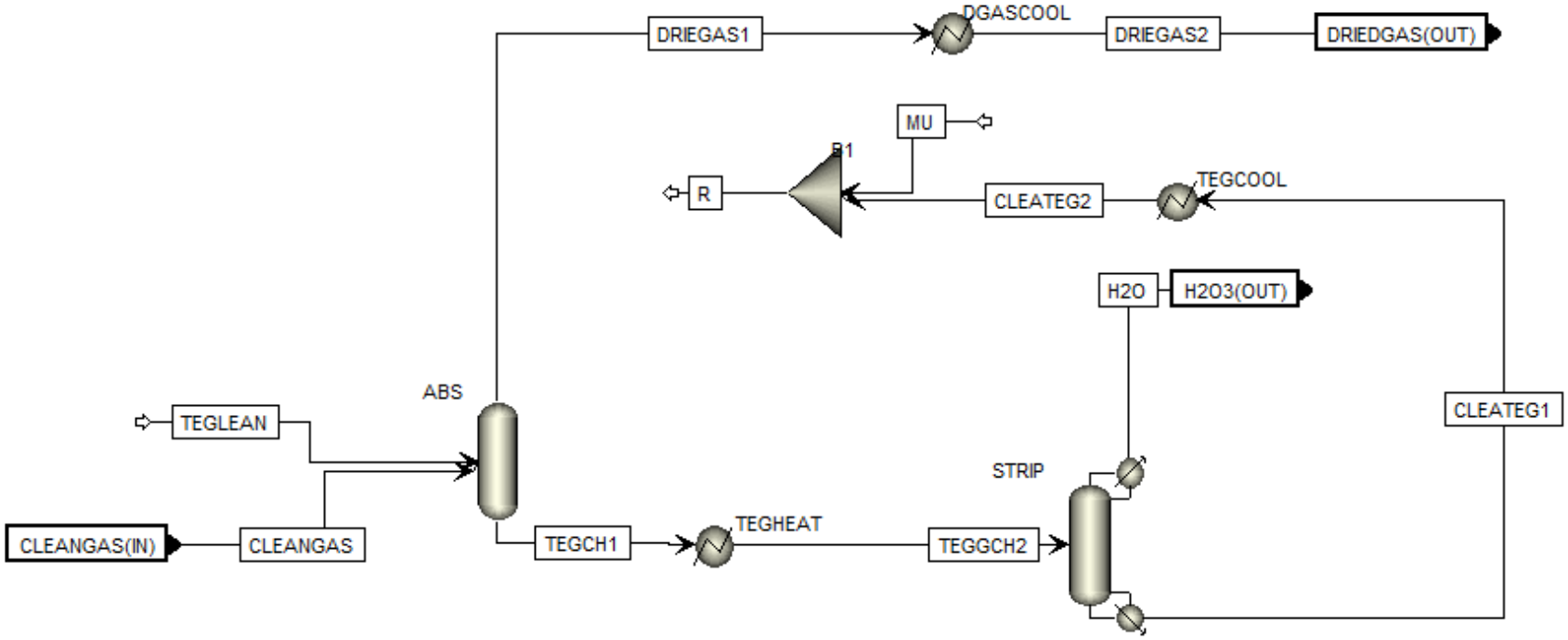

Figure S2. The TEG-based H_2O removal unit as modeled in Aspen Plus (Aspen ID: *H2OSEP2*).

Table S5. Fixed parameters for the TEG-based H_2O removal units (equation of state: SR-POLAR)[31].

Process Block	Aspen ID	Aspen Pre Built Model	T (°C)	P (bar)	Molar Reflux Ratio	No. of Stages	Feed Stage
Absorber	*ABS*	Radfrac Equilibrium No Condenser No Reboiler	~25-50	1	n.a	10	TEGLEAN :1 CLEANGAS:10
Distillation	*STRIP*	Radfrac Equlibirum Partial Vapor Condenser Kettles	n.a	1	1	5	5
Post-absorber Cooler	*DGASCOOL*	Heater	25	1	n.a	n.a	n.a
Pre-distillation Heater	*TEGHEAT*	Heater	200	1	n.a	n.a	n.a
Post-distillation Coolers	*TEGCOOL*	Heater	25	1	n.a	n.a	n.a

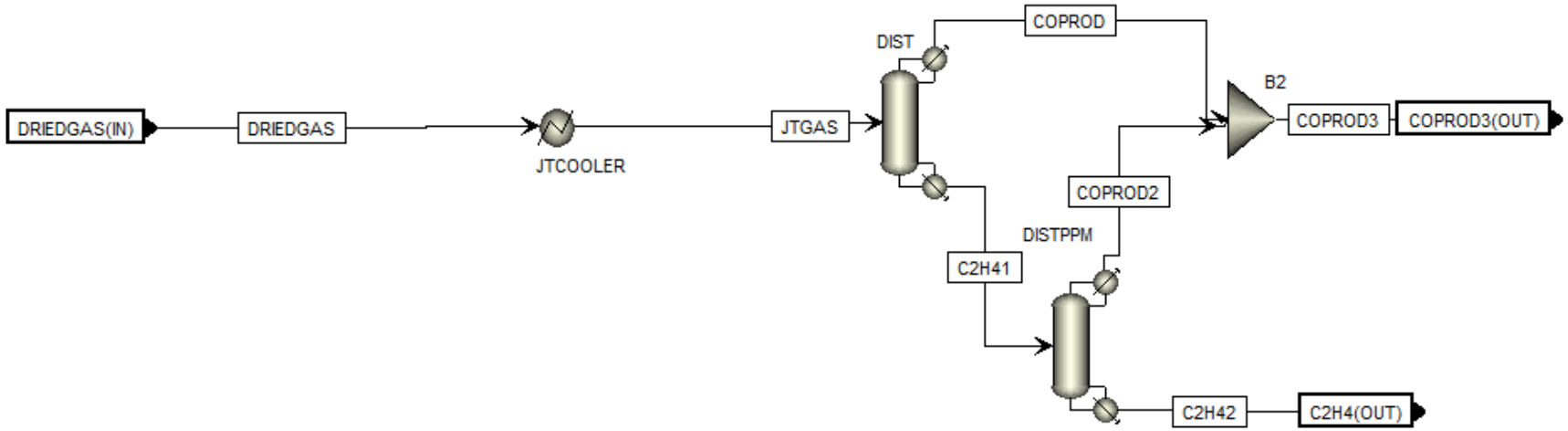

Figure S3. The cryogenic distillation unit applied for C_2H_4 recovery as modeled in Aspen Plus (Aspen ID: *C2H4SEP*).

Table S6. Fixed parameters for the cryogenic distillation unit (equation of state: PENG-ROBINSON)[32].

Process Block	Aspen ID	Aspen Pre Built Model	T (°C)	P (bar)	Mass Reflux Ratio	No. of Stages	Feed Stage
Cryogenic Distillation	*Dist*	Radfrac Equlibirum Partial Vapor Condenser Kettles	n.a	1	0.1	20	20
Cryogenic Distillation PPM	*DistPPM*	Radfrac Equlibirum Partial Vapor Condenser Kettles	n.a	1	n.a	10	10
Pre-cooler Cryogenic Distillation	*JTCooler*	Heater	-200	1	n.a	n.a	n.a

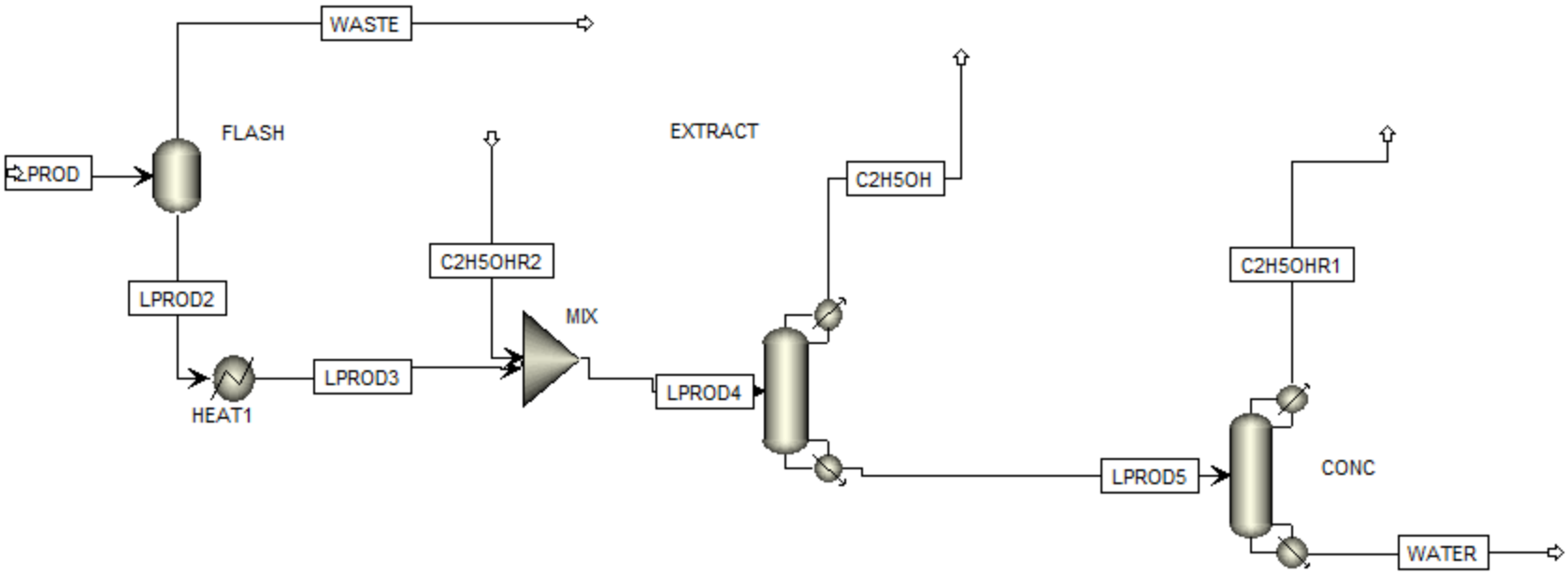

Figure S4. The double distillation unit applied for C_2H_5OH purification (done in separate simulation file).

Table S7. Fixed parameters for the double distillation unit (equation of state: ENRTL-RK)[26,31,33].

Process Block	Aspen ID	Aspen Pre Built Model	T (°C)	P (bar)	Mass Reflux Ratio	No. of Stages	Feed Stage	Mass Boil-up Ratio
Extractive Distillation	*EXTRACT*	Radfrac Equlibirum Partial Vapor Condenser Kettles	n.a	1	Refer to specification	25	22	0.1
Concentrator Distillation	*CONC*	Radfrac Equlibirum Partial Vapor Condenser Kettles	n.a	1	0.1	25	25	Refer to specification
Pre-distillation Heater	*HEAT1*	Heater	78	1	n.a	n.a	n.a	n.a

Table S8. Specifications for C_2H_5OH purification (conducted in a separate simulation file).

Specification Name	Variable	Aspen ID Stream	Value
C2H5OH	C_2H_5OH mass frac of final purified stream	*C2H5OH*	Fixed at 0.99
	Mass reflux ratio of the extractive column	*EXTRACT. Mass RR*	Changed according to above
C2H5OHF	C_2H_5OH specific mass flow of final purified stream	*C2H5OH*	Changed to reach 95 wt.% purity
	Mass boil-up ratio of the concentrator column	*CONC. Mass BR*	Changed according to above

Table S9. Variables changed during process simulation and closure of the mass balance

Variable Description	Aspen ID	Indicative Unit	Specification
Cathodic output flow rate	*CATPROD*	kg/hr	Calculated based on electrolyzer performance
Cathodic liquid flow rate	*LPROD*	kg/hr	
Anodic output flow rate	*ANOPROD*	kg/hr	
Anodic water input flow rate	*ANOFEED*	kg/hr	
Lean amine flow rate for upstream and downstream CO_2 capture units	*CO2SEP.MEA* *CO2SEP2.MEA* *CO2SEP3.MEA*	kg/hr	Until maximum convergence is reached to absorb the maximum amount of CO_2
Water make-up flow rate for upstream and downstream CO_2 capture units	*CO2SEP.MU (H2O)* *CO2SEP2.MU (H2O)* *CO2SEP3.MU (H2O)*	kg/hr	Completed conjointly to close the mass balance, with a residual error around (1e-3) of the amine loop R2=MEA
Mass boil-up ratio of MEA stripper in upstream and downstream CO_2 capture units	*CO2SEP.STRIP. Mass BR* *CO2SEP2.STRIP. Mass BR* *CO2SEP3.STRIP. Mass BR*	n.a	
Lean TEG flow rate	*H2OSEP2.TEGLEAN*	kg/hr	Until split fraction of absorbed H_2O is equal to 0.9999
Molar boil-up ratio of TEG stripper	*H2OSEP2.Mole BR*	n.a	Until the bottom outlet of the distillation column is equal or inferior to 200 °C
Mass boil-up ratio of cryogenic distillation unit	*C2H4SEP.DIST. Mass BR*	n.a	When max of CO is separated from C_2H_4, and split fraction of C_2H_4 to liquid is equal to 0.99
Mass boil-up ratio of cryogenic distillation PPM unit	*C2H4SEP.DISTPPM. Mass BR*	n.a	Adjusted together to reach 99.9 wt.% or maximum allowed by convergence.
Mass reflux ratio of cathodic cryogenic distillation PPM	*C2H4SEP.DISTPPM. Mass RR*	n.a	

Table S10. Component list for the process simulation. All components used 'Conventional' properties from the Aspen Plus database. It was assumed that all gasses present in the cathode and anode streams follow Henry's Law throughout the process (i.e., dissolution of the gas in the liquid phase).

Component ID	Component name	Henry Component
H2O	Water	
CO2	Carbon Dioxide	Applicable
H2S	Hydrogen Sulfide	Applicable
H3O+	Hydronium	
OH-	Hydroxide	
HCO3-	Bicarbonate	
CO3-2	Carbonate	
HS-	Bisulfide	
S-2	Sulfide	
MEAH+	Protonated monoethanolamine	
MEACOO-	Monoethanolamine carbonate	
N2	Nitrogen	Applicable
O2	Oxygen	Applicable
CO	Carbon Monoxide	Applicable
H2	Hydrogen	Applicable
CH4	Methane	Applicable
ETHYL-01	Ethylene	Applicable
TRIET-01	Tri ethylene glycol	
ETHAN-01	Ethanol	
1-PRO-01	1-propanol	
FORMI-01	Formic acid	
ACETI-01	Acetic acid	

Supplementary Note 3: CO_2 Electrolyzer Performance

In the CO_2 electrolyzer, CO_2 electroreduction and H_2O oxidation take place concurrently at the cathode and anode, respectively (**Table S11**). CO_2 electroreduction can produce a variety of gas and liquid products - in this work we considered 7 different cathode reactions. It was assumed that the anode reaction was exclusively H_2O oxidation to O_2 (i.e. no reduction products from the cathode were able to reach the anode and be oxidized back to CO_2).

Table S11. Electrochemical reactions taking place in the CO_2 electrolyzer.

n°	Reaction
Anode	
0	$2H_2O \rightarrow O_2 + 4H^+ + 4e^-$
Cathode	
1	$CO_2 + 2H^+ + 2e^- \rightarrow HCOOH\ (aq)$
2	$CO_2 + 2H^+ + 2e^- \rightarrow CO\ (g) + H_2O$
3	$2CO_2 + 8H^+ + 8e^- \rightarrow CH_3COOH\ (aq) + 2H_2O$
4	$2CO_2 + 12H^+ + 12e^- \rightarrow C_2H_5OH\ (aq) + 3H_2O$
5	$2CO_2 + 12H^+ + 12e^- \rightarrow C_2H_4\ (g) + 4H_2O$
6	$3CO_2 + 18H^+ + 18e^- \rightarrow C_3H_7OH\ (aq) + 5H_2O$
7	$2H^+ + 2e^- \rightarrow H_2$

We considered two different zero-gap electrolyzer configurations in this work: one which incorporated an AEM and one which incorporated a BPM (**Table S12**). To account for power supply inefficiencies and balance of plant energy requirements, the actual electricity input to the electrolyzer subsystem was assumed to be 16% larger than the electricity required for the electrolyzer alone[34].

The AEM configuration was assumed to operate with 0.1 M $KHCO_3$ anolyte. During electrolyzer operation, potassium cations can migrate through the AEM to the cathode, necessitating electrolyte top-up[35]. The $KHCO_3$ consumption rate reported in **Table S12** is the 30-day average from a pilot-scale CO_2 electrolyzer whose anolyte was topped-up once the anolyte conductivity

fell more than 10% from its original value[36]. It was assumed that the BPM configuration operated without cations in the anolyte and did not consume $KHCO_3$ during operation.

Table S12. Performance assumptions for the two CO_2 electrolyzer configurations.

Metric	Unit	AEM	BPM
Cell voltage	V	4.0	3.5
Current density	mA/cm^2	200	300
Faradaic Efficiency	%	100	100
H_2	%	18	5
CO	%	33	8
C_2H_4	%	25	70
CH_2O_2	%	3	0
$C_2H_4O_2$	%	5	8
C_2H_5OH	%	12	7
C_3H_7OH	%	4	2
Single pass CO_2 utilization	%	30%	80%
CO_2 crossover	µmol/C	3.12	0
$KHCO_3$ consumption	nmol/C	135	0
Water consumption	µmol/C	8.43	4.23
CO_2 humidification	µmol/C	0.371	0
Reaction	µmol/C	2.06	1.91
Miscellaneous	µmol/C	6.01	2.32

Water was consumed in three primary forms in the electrolyzer subsystem. In the AEM case, water was added to the incoming CO_2 to increase the water content from 1.8 wt.% (as supplied by the capture unit) to 3.4 wt.% before entering the electrolyzer. No additional humidification was required for the BPM case. Secondly, the electrochemical reactions consumed and produced water, based on the process selectivity and products. Thirdly, there was a miscellaneous water usage to account for water which crossed through the membrane, water used for washing away

cathodic salt precipitation, and water used for electrolyte replacement[35]. The miscellaneous AEM water consumption reported in **Table S12** is the 30-day average from a pilot-scale CO_2 electrolyzer[36]. All other water consumption values in **Table S12** were estimated from calculations. The value presented for the BPM case assumes that there is no washing or electrolyte replacement but there was water crossover with a water transport coefficient of 0.90[37].

The liquid streams leaving the electrolyzer were calculated based on the supply of CO_2, electrolyte, and water to the electrolyzer (**Table S13**). The cathode and anode gas streams leaving the electrolyzer were assumed to be fully humidified (i.e., they slightly reduce the flow rate of the liquid stream). For simplicity, it was assumed that there is a single liquid drain from the system and no liquid products traveled to the anolyte.

Table S13. Flow rate and composition of cathode liquid stream.

Metric	Unit	AEM	BPM
Flow rate	μg/C	146	51.1
Composition	wt.%	100	100
CH_2O_2	wt.%	4.89	0
$C_2H_4O_2$	wt.%	2.66	7.09
C_2H_5OH	wt.%	3.26	7.71
C_3H_7OH	wt.%	0.946	0.789
$KHCO_3$	wt.%	9.22	0
H_2O	wt.%	79.0	84.4

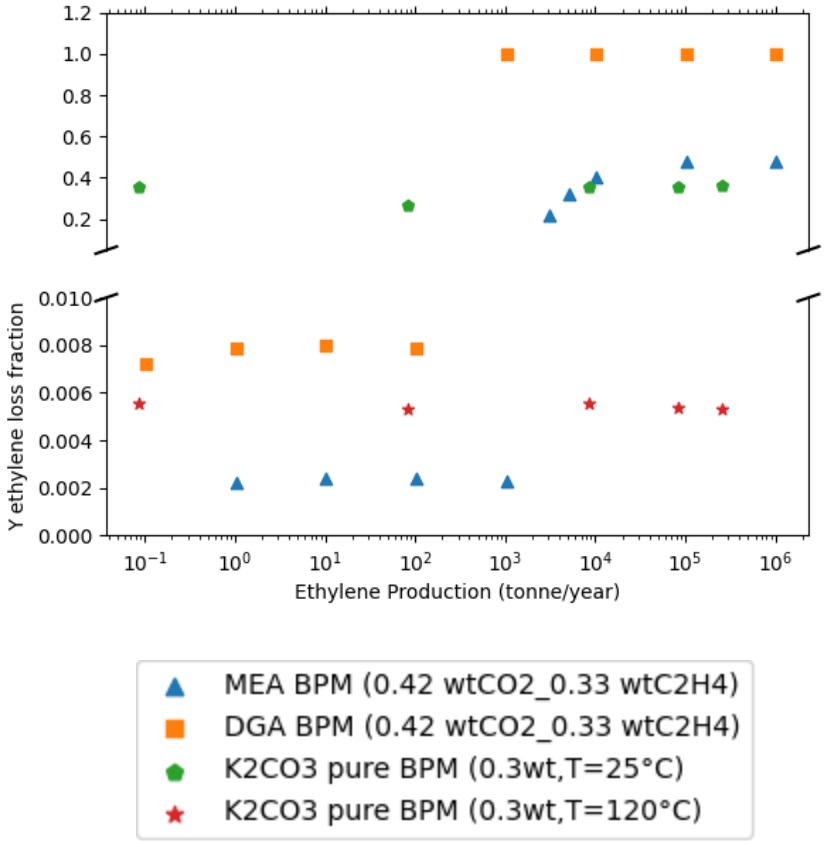

Figure S5. C_2H_4 absorption in the downstream CO_2 recovery unit with different capture solutions (30 wt.%): monoethanolamine (MEA), diglycolamine (DGA), and Benfield solution (potassium carbonate, K_2CO_3). In the BPM configuration, the gaseous cathodic stream consisted of 42 wt.% CO_2, 33 wt.% C_2H_4, 22 wt.% CO, 2 wt.% H_2O, and 1 wt.% H_2.

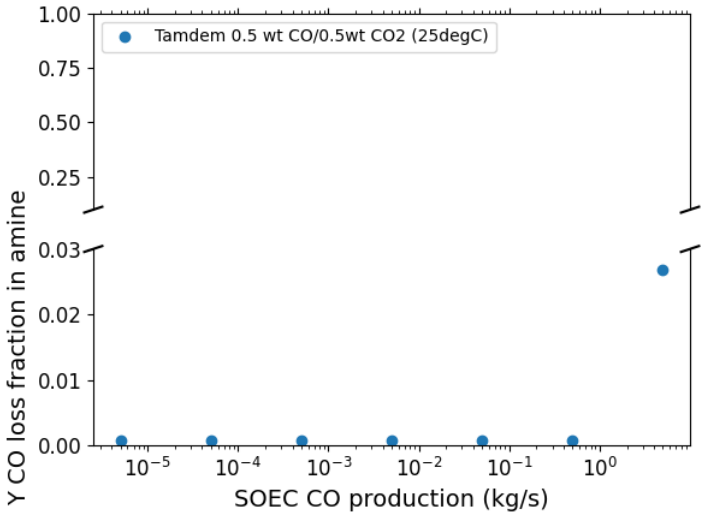

Figure S6. CO absorption in the downstream CO_2 recovery unit at different solid oxide electrolyzer cell (SOEC) production rates. The gaseous cathode stream consisted of 50 wt.% CO_2 and 50 wt.% CO.

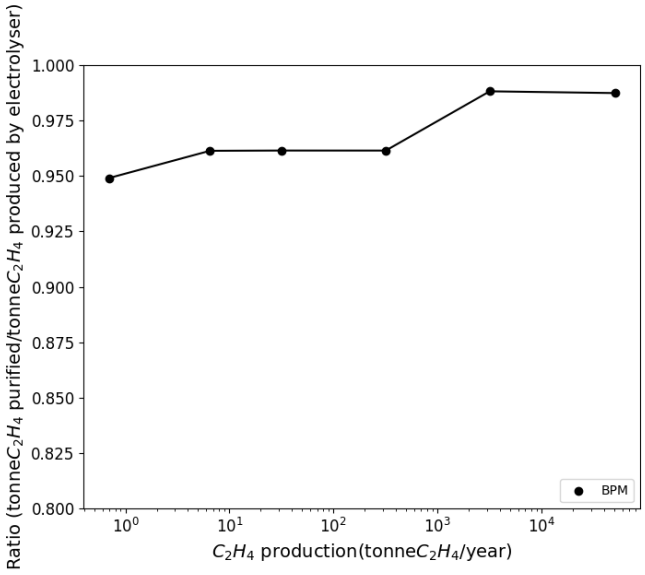

Figure S7. Ratio of purified C_2H_4 to electrochemically produced C_2H_4 (BPM configuration). The modified separation method was used for the downstream CO_2 recovery unit at production rates >1,000 tonneC_2H_4/year.

Supplemental Note 4: Techno-Economic Model

This section details the assumptions and calculations performed to complete the TEA: economic indicator calculations (**Table S14**), process equipment costs (**Table S15**, **Table S16**), and external economic parameters (i.e., raw material, utility, and market prices; **Table S17**).

Table S14. Economic indicator definitions and calculations[38,39]. It was assumed that the plant lifetime (*n*) was 20 years and the interest rate (*Interest rate*) was 10%.

Parameter	Description	Formula	Unit
Procurement Cost	Equipment cost without installation	Aspen Plus' Icarus module equipment sizing with assumptions	USD
CAPEX	Capital expenditure to build the plant	$CAPEX = Lang\ factor \times Procurement\ cost$ With $Lang\ factor = 4.05$	USD
Rm OPEX	Annual raw material cost	$Rm\ OPEX = Flowrate\ raw\ material \times Price\ raw\ material$	USD/year
E OPEX	Annual electricity cost (for electrolyzer)	$Electricity\ OPEX = Electrolyser\ power \times Electricity\ price$	USD/year
U OPEX	Annual utility cost	$U\ OPEX = Load \times Utility\ price$ Load determined from Aspen Plus Energy Analyser	USD/year
Cm OPEX	Annual consumable cost	$Cm\ OPEX = Consumable\ flowrate \times Consumable\ price$	USD/year
FC OPEX	Annual fixed costs (e.g., maintenance, labour, taxes and insurance, factory and head office overhead)	$FC\ OPEX = 0.09 \times CAPEX$	USD/year
IR salvage	Annual value loss of the equipment	$IR = Declining\ balance\ depreciation\ factor \times CAPEX$ With $Declining\ balance\ depreciation\ factor = 0.02$	USD/year
DBD	Declining balance depreciation	$DBD = 1 - (\frac{IR}{CAPEX - IR})^{\frac{1}{n}}$	n.a

A_i	Year i annual provision for depreciation	$A_i = (CAPEX - IR) \times (1 - DBD)^{i-1} \times DBD$	USD/year
A	Average annual provision for depreciation	For i: 1 to n $A = Average\ (A_i)$	USD/year
im	Yearly average rate of return if the money was not invested in plant	$im = \frac{Interest\ rate \times (n+1)}{2 \times 100 \times n}$	n.a
IC OPEX	Investment cost per year	$IC\ OPEX = \left(\sum_{i=1}^{n} A_i + CAPEX \right) \times im$	USD/year
$OPEX_i$	Year i operating expenditure	$OPEX_i = Rm\ OPEX + E\ OPEX + U\ OPEX + Cm\ OPEX + FC\ OPEX + A_i + IC\ OPEX$	USD/year
OPEX	Average lifetime operating expenditure	For i: 1 to n $OPEX = Average\ (OPEX_i)$	USD/year
R_{C2H4}	Revenue from C_2H_4 sales	$R_{C2H4} = C_2H_4\ flowrate \times C_2H_4\ price$	USD/year
R_{C2H5OH}	Revenue from C_2H_5OH sales	$R_{C2H5OH} = C_2H_5OH\ flowrate \times C_2H_5OH\ price$	USD/year
R_{O2}	Revenue from O_2 sales	$R_{O2} = O_2\ flowrate \times O_2\ price$	USD/year
R_{Syngas}	Revenue made from syngas sales	$R_{syngas} = (CO\ flowrate \times CO\ HHV + H_2\ flowrate \times H_2\ HHV) \times Syngas\ price$ With $CO\ HHV$ = 10.1 GJ/tonne and $H_2\ HHV$ = 142 GJ/tonne	USD/year
Revenues	Revenue from all sales	$Revenues = R_{C2H4} + R_{C2H5OH} + R_{O2} + R_{syngas}$	USD/year
GP_i	Gross profit at year i	$GP_i = Revenue_i - OPEX_i$	USD/year

CF_i	Cash flow at year i	$CF_i = GP_i \times (1 - a) + A_i$ with $a = tax\,rate = 0.1$	USD/year
NPV	Net present value normalized by C_2H_4 production	$NPV = \frac{NPV(Interest\,rate, CF_1{:}CF_n) + CAPEX}{C_2H_4\ flowrate \times n}$ *NPV* calculated using Excel's built-in formula	USD/tonne C_2H_4
ACCR	Annual capital charge ratio	$ACCR = \frac{Interest\,rate \times (1 + Interest\,rate)^n}{(1 + Interest\,rate)^n - 1}$	n.a
TAC_{C2H4}	Total annualized cost (C_2H_4 only allocation)	$TAC_{C2H4} = \frac{(OPEX + CAPEX \times ACCR)}{C_2H_4\,flowrate}$	USD/tonne C_2H_4
TAC_{CO2}	Total annualized cost (normalized per CO_2 converted)	$TAC_{CO2} = \frac{(OPEX + CAPEX \times ACCR)}{CO_2\,converted\,flowrate}$	USD/tonne CO_2
X_{massal}	Mass allocation ratio	$Xmassal = \frac{C_2H_4\,flowrate}{O_2\,flowrate + CO\,flowrate + H_2\,flowrate + C_2H_5OH\,flowrate + C_2H_4\,flowrate}$	n.a
TAC_{C2H4} mass allocated	Total annualized cost (mass allocated per C_2H_4)	$TAC_{C2H4}mass\,allocated = TAC_{C2H4} \times Xmassal$	USD/tonne C_2H_4
$X_{marketal}$	Market allocation ratio	$Xmarketal = \frac{R_{C2H4}}{R_{C2H4} + R_{syngas} + R_{O2} + R_{C2H5OH}}$	n.a
TAC_{C2H4} market allocated	Total annualized cost (market allocated per C_2H_4)	$TAC_{C2H4}market\,allocated = TAC_{C2H4} \times Xmarketal$	USD/tonne C_2H_4

Table S15. Assumptions pertaining to chemical process equipment used for calculations and factorial method[39]. The electrolyzer (area calculated using the current density and C_2H_4 Faradaic Efficiency from **Supplemental Note 3**) was assumed to cost 1840 USD/m^2 [40].

Equipment	Parameter	Value
Columns	Number of trays (for skirt thickness)	35
	Material used	304 Stainless Steel
	Bubble cap tray	n.a
	Double cross flow tray	n.a
Flash separators	Number of trays (for skirt thickness)	20
Heat exchangers	Length of heat exchanger	4.9 m
	Number of passes	2
	Operating pressure	<10 bar
	Operating temperature	<350 °C
	Material	304 L Stainless Steel

Table S16. Inflation and currency conversion for chemical process equipment costs (e.g., columns, flash separators, and heat exchangers) using the chemical engineering plant cost index (CEPCI)[41]. Costs were calculated by the Aspen software in euro (2000) and converted to US Dollars (2019).

Assumptions	Conversion to USD (2019)
1 euro (2019) = 1.1199 USD (2019) CEPCI 2019 = 607.5 CEPCI 2000 = 394.1	$Cost\ (2019\ USD) = Cost\ (2000\ euro) \times \frac{CEPCI_{2019}}{CEPCI_{2000}} \times 2019\ exchange\ rate$

Table S17. External economic parameters in the base case scenario.

Category	Name	Unit	Value	Ref
Raw Materials	CO_2	USD/tonne	0	[42]
	DI water	USD/tonne	14.5	[43]
	$KHCO_3$	USD/tonne	1000	n.a
	Cooling water	USD/tonne	0.177	[43]
	MEA	USD/tonne	1400	n.a
	TEG	USD/tonne	1000	n.a
Utilities	Electricity	USD/MWh	12	[44–46]
	Low pressure (LP) steam	USD/GJ	4.54	[43]
	High pressure (HP) steam	USD/GJ	5.66	[43]
	Medium pressure (MP) steam	USD/GJ	3.51	[43]
	Natural gas	USD/GJ	1.96	[43,46,47]
	Refrigerant	USD/GJ	14.12	[43]
	Cooling water	USD/GJ	0.378	[43]
Market Prices	C_2H_4	USD/tonne	967	[44,48]
	O_2	USD/tonne	500	[44]
	Syngas (H_2/CO)	USD/GJ	15.5	[49–51]
	C_2H_5OH	USD/tonne	1250	[44]

Supplemental Note 5: Aspen Plus Model of Benchmark Process

To provide a reference case for the electrochemical production of C_2H_4, we modeled a conventional petrochemical production process with and without CO_2 recovery. We selected this benchmark process (**Figure S8**, **Figure S9**) to be the steam cracking of shale gas (SG, **Table S18**). The Aspen Plus model for the benchmark process is based on previous reports from literature (**Table S19**, **Table S20**)[52,53].

The SG process consisted of a CO_2 recovery unit (Aspen ID: *CO2SEP*, optional), a TEG-based H_2O removal unit (Aspen ID: *H2OSEP*), an upstream de-methanizer (Aspen ID: *CH4SEP*; **Figure S10**, **Table S21**), a steam cracker and quench tower (Aspen ID: *CRACKER, QUENCH;* **Figure S11**, **Table S22**), a downstream TEG-based H_2O removal unit (Aspen ID: *H2OSEP2*), and a cryogenic distillation unit (Aspen ID: *CRYODIST*; **Figure S12**, **Table S23**). For details about the upstream CO_2 recovery unit and TEG-based H_2O removal units please refer to **Supplemental Note 2**. A list of variables adjusted during the simulations is also provided (**Table S24**).

As with the CO_2RR process, the main product was C_2H_4, but in the benchmark there were additional streams: a methane (99 wt.% CH_4) co-product stream and a liquid waste stream (containing C_{4+} compounds and unrecovered C_2H_4). Without a CO_2 recovery unit, CO_2 ends up as a contaminant in the liquid waste stream or is vented to the atmosphere. Additional economic parameters and economic calculations were included to assess the economics of the benchmark process (**Table S25**, **Table S26**).

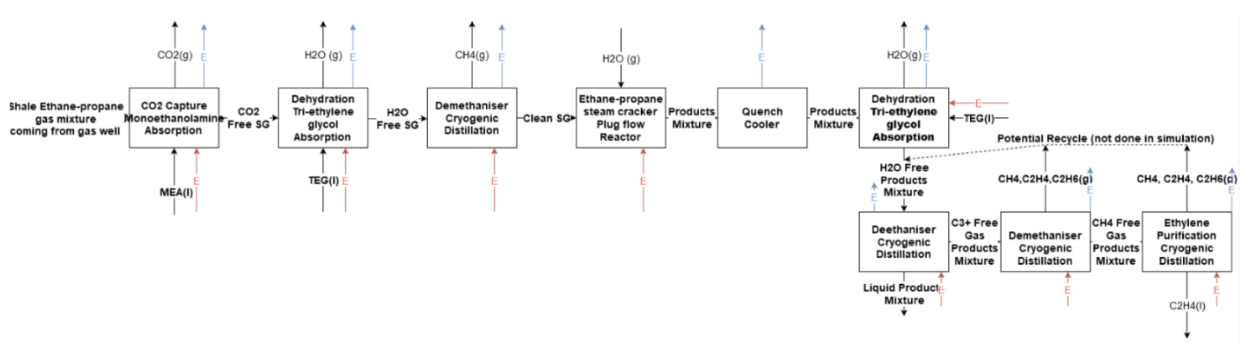

Figure S8. Process flow diagram for the SG to C_2H_4 benchmark process.

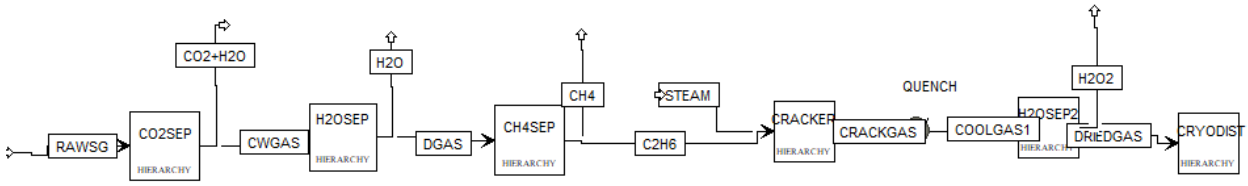

Figure S9. Simulation environment for the SG to C_2H_4 benchmark process.

Table S18. SG composition (supplied at 25 °C and 6.894757 bar). SG composition can vary depending on the well it is extracted from (i.e. some may have high H_2S or CO_2 content)[54]. To provide a conservative CAPEX and OPEX, we chose a composition representative of the Marcellus Shale gas field due to its high ethane content (16.1 mol.%).

Component	Mol Fraction
CO_2	0.001
N_2	0.004
CH_4	0.794
C_2H_6	0.161
C_3H_8	0.04

Table S19. SG cracking reaction kinetics (label: CRACK, reaction type: thermal kinetics)[55–57].

N°	Reaction	K Pre-exponential Factor		E Exponential Factor	
		Value	Unit	Value	Unit
1	$C_2H_6 \rightarrow C_2H_4 + H_2$	4.6e+13	s^{-1}	272.838	kJ mol^{-1}
2	$C_3H_6 \rightarrow C_2H_2 + CH_4$	7.2e+12	s^{-1}	274.178	
3	$C_2H_2 + C_2H_4 \rightarrow C_4H_6$	1e+12	$cm^3\ mol^{-1}\ s^{-1}$	172.632	
4	$C_2H_4 + C_4H_6 \rightarrow C_6H_6 + 2H_2$	8.3e+09	$cm^3\ mol^{-1}\ s^{-1}$	144.599	
5	$C_3H_8 \rightarrow C_3H_6 + H_2$	5.8e+10	s^{-1}	214.597	
6	$C_3H_8 + C_2H_4 \rightarrow C_2H_6 + C_3H_6$	2.5e+13	$cm^3\ mol^{-1}\ s^{-1}$	247.107	
7	$2C_3H_6 \rightarrow 3C_2H_4$	7.3e+12	s^{-1}	268.487	
8	$2C_2H_6 \rightarrow C_3H_8+CH_4$	3.88e+11	s^{-1}	273.006	
10	$C_2H_4 +C_2H_6 \rightarrow C_3H_6+CH_4$	7e+13	$cm^3\ mol^{-1}\ s^{-1}$	252.839	
11	$C_3H_6+C_2H_6 \rightarrow CH_4+C_4H_8$	1e+14	$cm^3\ mol^{-1}\ s^{-1}$	251.082	
12	$C_2H_4+H_2 \rightarrow C_2H_6$	8.49e+08	s^{-1}	136.5	
13	$C_2H_2+CH_4 \rightarrow C_3H_6$	3.81e+08	s^{-1}	147.2	
14	$H_2+ C_3H_6 \rightarrow C_3H_8$	903000	s^{-1}	93.5	

Table S20. Component list for the SG process simulation. All components used 'Conventional' properties from the Aspen Plus database. It was assumed that all gases follow Henry's law throughout the ethane propane steam cracker process (i.e., dissolution of the gas in the liquid phase).

Component ID	Component name	Henry Component
H2O	Water	
CO2	Carbon Dioxide	Applicable
H2S	Hydrogen Sulfide	Applicable
H3O+	Hydronium	
OH-	Hydroxide	
HCO3-	Bicarbonate	
CO3-2	Carbonate	
HS-	Bisulfide	
S-2	Sulfide	
MEAH+	Protonated monoethanolamine	
MEACOO-	Monoethanolamine carbonate	
N2	Nitrogen	Applicable
O2	Oxygen	Applicable
CO	Carbon Monoxide	Applicable
H2	Hydrogen	Applicable
CH4	Methane	Applicable
C2H4	Ethylene	Applicable
TRIET-01	Tri ethylene glycol	
C2H6	Ethane	Applicable
C3H8	Propane	Applicable
C2H2	Acetylene	Applicable
PROPY-01 (C3H6)	Propylene	Applicable
CIS-2-01 (C4H8)	Cis-2-butene	Applicable
1:3-B-01 (C4H6)	1,3 - butadiene	Applicable
C6H6	Benzene	Applicable

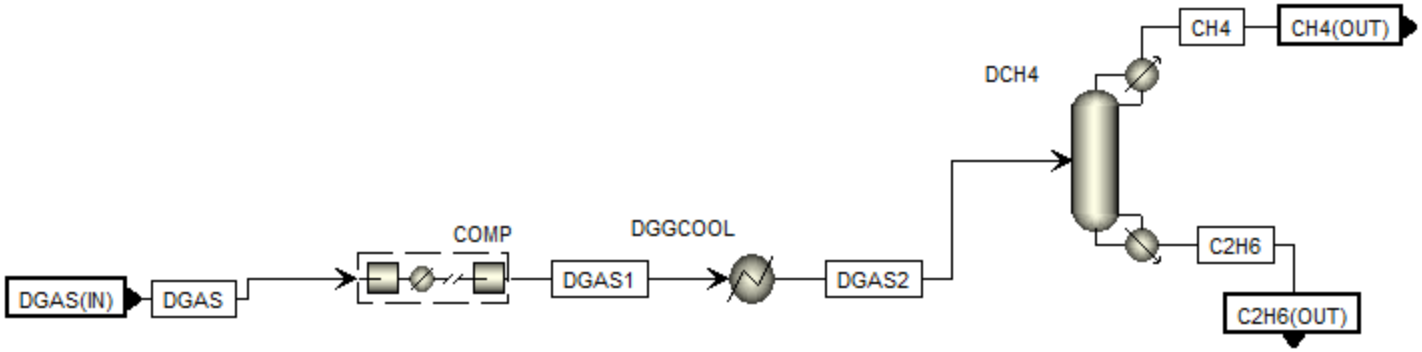

Figure S10. The upstream de-methanizer unit as modeled in Aspen Plus (Aspen ID: *CH4SEP*).

Table S21. Fixed parameters for the upstream de-methanizer unit (equation of state: PENG-ROBINSON).

Process Block	Aspen ID	Aspen Pre Built Model	T (°C)	P (bar)	No. of Stages	Feed Stage
Compressor	*COMP*	Mcompr Isentropic	25	1 to 32	3	n.a
Pre-distillation Cooler	*DGGCOOL*	Heater	25 to -100	32	n.a	n.a
Demethanizer	*DCH4*	Radfrac equilibrium Partial vapor condenser Kettles	n.a	32	10	10

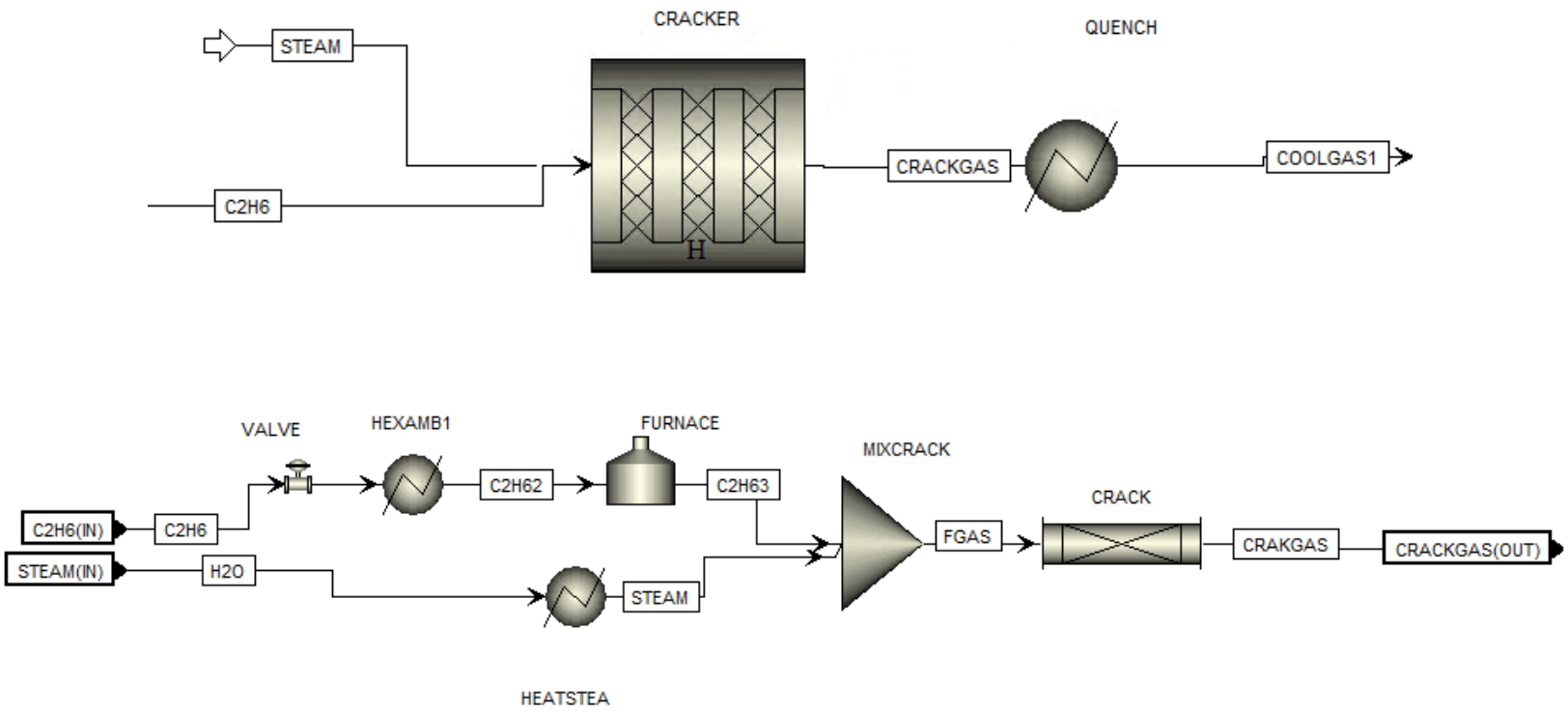

Figure S11. The steam cracker (Aspen ID: *CRACKER*) and quench tower (Aspen ID: *QUENCH*) as modeled in Aspen Plus.

Table S22. Fixed parameters for the steam cracker and quench tower (equation of state: PENG-ROBINSON)[53,55,58].

Process Block	Aspen ID	Aspen Pre Built Model	T (°C)	P (bar)	Feed Stage	Reaction ID
Pressure Regulator	*VALVE*	Valve Adiabatic	-1 to -85	32 to 1	n.a	n.a
Feed Steam Boiler	*HEATSTEA*	Heater	25 to 680	1	n.a	n.a
SG Pre-heater	*HEXAMB1*	Heater	-85 to 25	1	n.a	n.a
SG Furnace	*FURNACE*	Heater	25 to 680	1	n.a	n.a
SG Cracker	*CRACK*	Rplug	(T, location) (680,0) (770,0.1) (820,0.8) (1100,1)	1	0	CRACK
Quench Tower	*QUENCH*	Heater	25	1	n.a	n.a

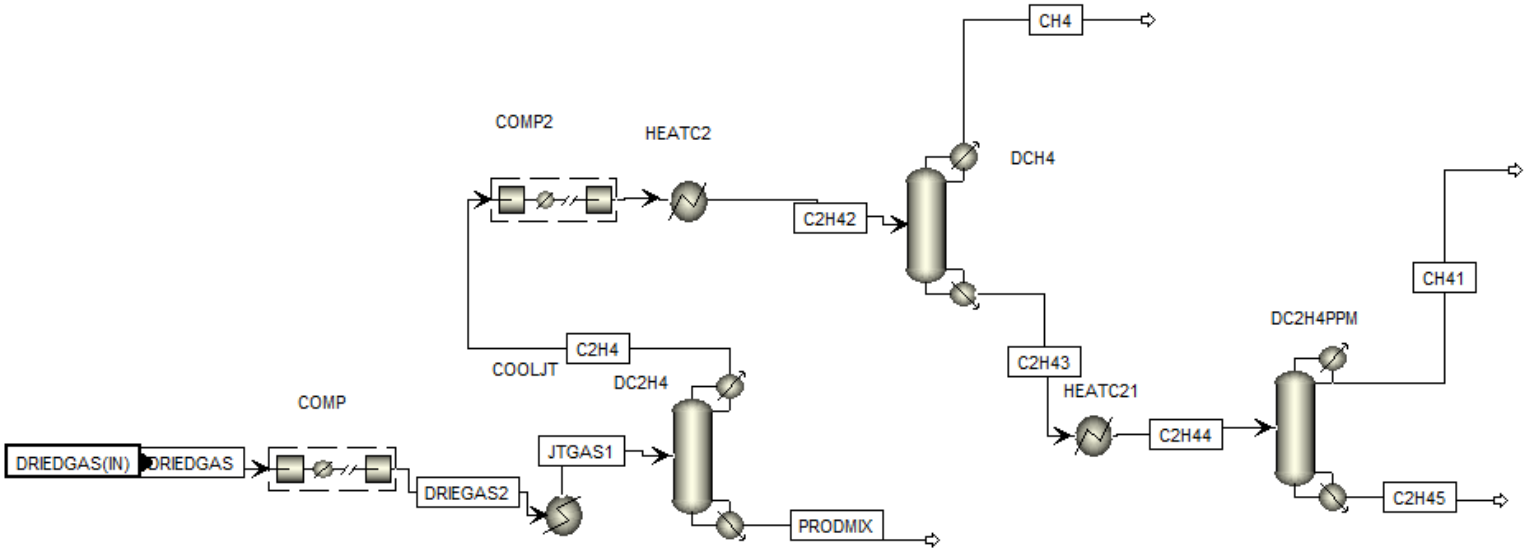

Figure S12. The cryogenic distillation unit (downstream de-ethanizer and double demethanizer) unit as modeled in Aspen Plus (Aspen ID: CRYODIST).

Table S23. Fixed parameters for the cryogenic distillation unit (equation of state: PENG-ROBINSON)[32].

Process Block	Aspen ID	Aspen Pre Built Model	T (°C)	P (bar)	No. of Stages	Feed Stage
Compressor De-ethanizer	*COMP*	Mcompr Isentropic	25	25	3	n.a
Pre-cooler Distillation	*COOLJT*	Heater	25 to 0	25	n.a	n.a
De-ethanizer	*DC2H4*	Radfrac Partial vapor condenser Kettle	n.a	25	20	10
Compressor Demethanizer	*COMP2*	Mcompr Isentropic	25	32	3	n.a
Pre-distillation Heater	*HEATC2*	Heater	25 to -32	32	n.a	n.a
Demethanizer	*DCH4*	Radfrac Partial vapor condenser Kettle	n.a	32	20	20
Pre-distillation Heater	*HEATC21*	Heater	-18 to -40	32	n.a	n.a
Rectification C_2H_4 Distillation Column	*DC2H4PPM*	Radfrac Partial vapor condenser Kettle	n.a	32	20	20

Table S24. Variables changed during process simulation and closure of the mass balance.

Variable description	Aspen ID	Indicative Unit	Specification
Shale gas extracted from well flow rate	*RAWSG*	kg/hr	Adjusted to achieve the desired flow rate of purified C_2H_4
Lean amine flow rate for CO_2 recovery unit	*CO2SEP.MEA*	kg/hr	Until maximum convergence is reached to absorb the maximum amount of CO_2
Water make-up flow rate for CO_2 recovery unit	*CO2SEP.MU (H2O)*	kg/hr	Completed conjointly to close the mass balance, with a residual error around (1e-3) of the amine loop R2=MEA
Mass boil-up ratio of amine stripper in CO_2 recovery unit	*CO2SEP.STRIP. Mass BR*	n.a	
Upstream lean TEG flow rate	*H2OSEP.LEANTEG*	kg/hr	Until split fraction of absorbed H_2O is equal to 0.9999
Mass boil-up ratio of upstream TEG stripper	*H2OSEP.mass BR*	n.a	Until the bottom outlet of the distillation column is equal or inferior to 200 °C
Mass boil-up ratio of upstream demethanizer	*CH4SEP.mass BR*	n.a	Completed conjointly, Maximize the split fraction of CH_4 in the gas phase, Minimize the loss of C_2H_6 in the gas phase
Mass reflux ratio of upstream demethanizer	*CH4SEP.mass RR*	n.a	
Steam flow rate to cracker	*STEAM*	kg/hr	Equal to 1/3 of C_2H_6 fed to the cracker
Cracker length	*CRACKER.CRACK.L*	m	Until 99% of C_2H_6 fed is consumed by the reaction
Cracker diameter	*CRACKER.CRACK.D*	m	
Downstream lean TEG flow rate	*H2OSEP2.LEANTEG*	kg/hr	Until split fraction of absorbed H_2O is equal to 0.9999
Mass boil-up ratio of downstream TEG stripper	*H2OSEP2.mass BR*	n.a	Until the bottom outlet of the distillation column is equal or inferior to 200 °C

Mass boil-up ratio of downstream de-ethanizer	*CRYODIST.DC2H4.mass BR*	n.a	Completed conjointly, Maximize the split fraction of C_2H_4 in the gas phase, Maximize the split fraction of C_2H_6 in liquid
Mass reflux ratio of downstream de-ethanizer	*CRYODIST.DCH4.mass RR*	n.a	
Mass boil-up ratio of downstream demethanizer	*CRYODIST.DCH4.mass BR*	n.a	Completed conjointly, Maximize the split fraction of CH_4 in the gas phase, Minimize the loss of C_2H_4 in the gas phase
Mass reflux ratio of downstream demethanizer	*CRYODIST.DCH4.mass RR*	n.a	
Boil-up ratio of downstream demethanizer (PPM)	*CRYODIST.DC2H4PPM.mass BR*	n.a	Completed conjointly, Reach 99.9% C_2H_4 purity
Mass reflux ratio of downstream demethanizer (PPM)	*CRYODIST.DC2H4PPM.mass RR*	n.a	

Table S25. Additional external economic parameters for the benchmark SG process (to complement those listed in **Table S17**).

Category	Name	Unit	Value	Ref
Raw Materials	Shale Gas	USD/tonne	400	[59]
Utilities	Fired Heat	USD/GJ	3.51	[43]
Market Prices	CH_4	USD/tonne	300	[43]

Table S26. Additional economic indicator definitions and calculations (to complement those listed in **Table S14**)[39].

Parameter	Description	Formula	Unit
E OPEX	Annual electricity cost (for compressors)	$Electricity\ OPEX = Compressor\ power \times Electricity\ price$	USD/year
R_{CH4}	Revenue from CH_4 sales	$R_{CH4} = CH_4\ flowrate \times CH_4\ price$	USD/year
X_{massal}	Mass allocation ratio	$Xmassal = \frac{C_2H_4\ flowrate}{CH_4\ flowrate + C_2H_4\ flowrate}$	n.a
TAC_{C2H4} mass allocated	Total annualized production (mass allocated per C_2H_4)	$TAC_{C2H4} mass\ allocated = TAC_{C2H4} \times Xmassal$	USD/tonne C_2H_4
$X_{marketal}$	Market allocation ratio	$Xmarketal = \frac{R_{C2H4}}{R_{C2H4} + R_{CH4}}$	n.a
TAC_{C2H4} market allocated	Total annualized production cost (market allocated per C_2H_4)	$TAC_{C2H4} market\ allocated = TAC_{C2H4} \times Xmarketal$	USD/tonne C_2H_4

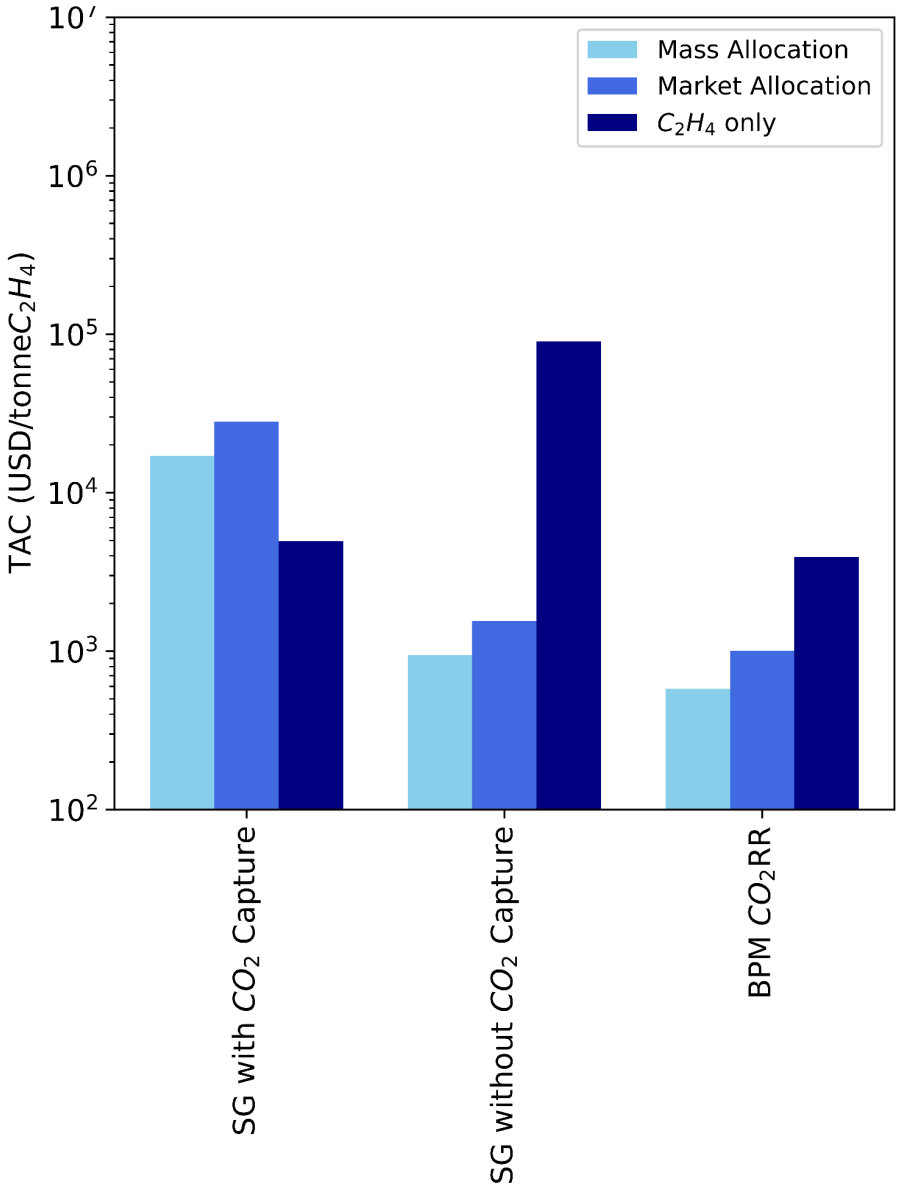

Figure S13. TAC of C_2H_4 production from CO_2RR compared to the SG benchmark process with and without CO_2 capture (50,000 tonneC_2H_4/year).

Supplemental Note 6: Comparison to CO_2RR TEA Literature

We performed a gap analysis to assess differences between the conclusions here and those in relevant literature (**Figure S14**, **Table S27**)[40,60,61].

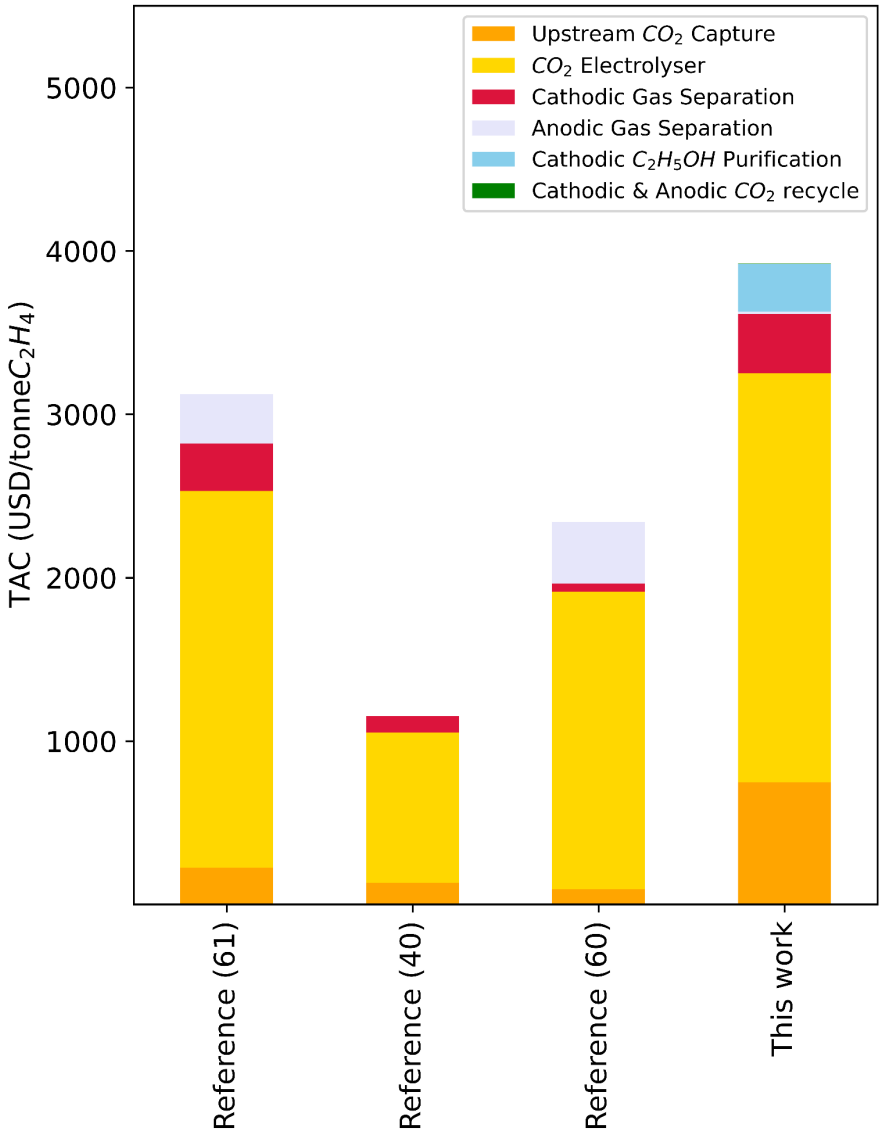

Figure S14. Quantitative comparison of TAC (C_2H_4 only) estimated in this work (3,000 tonneC_2H_4/year BPM configuration) against literature reports.

Table S27. Qualitative comparison of TAC (C_2H_4 only) estimated in this work against literature reports.

Area	Discrepancy	Reference [61]	Reference [40]	Reference [60]	This work
Economics	Scale (tonneC_2H_4/year)	18,250	36,500	32,850	3,150
	Lang factor	1	1	1	4.05
	Depreciation	MACRS (10 years, 0.2 salvage value)	MACRS (10 years, 0.2 salvage value)	None	Declining Balance (20 years, 0.02 salvage IR)
Electrolyzer	Single pass CO_2 conversion (%)	15	50	30	80
	FE_C_2H_4	70	90	64	70
	FE_H_2	30	10	36	5
	Cell voltage (V)	2.9	2.3	3.65	3.5
	Current density (mA/cm^2)	1000	200	120	300
	Power (kW/m^2)	29	4.6	4.3	10.5
	Energy (GJ/tonneC_2H_4)	171	105	235	206
	Electricity price (USD/MWh)	30	50	20	12
	Electrolyzer cost	550 USD/kW (2014)	920 USD/m^2 (2010) (equivalent to 200 USD/kW)	450 USD/kW	1840 USD/m^2 (equivalent to 175 USD/kW) + Factorial
	TAC (USD/tonneC_2H_4)	2154	865	800	2,500
Downstream	Technology	PSA	PSA	PSA	Multi-stage
	Operating cost and estimation method	0.25 kWh/m^3 total gas (order of magnitude estimate)	0.25 kWh/m^3 total gas (order of magnitude estimate)	0.25 kWh/m^3 total gas (order of magnitude estimate)	Determined from Aspen Plus model + Factorial
	TAC (USD/tonneC_2H_4)	197(Cathode) 209 (Anode) 0 (Liquid) 406 (Total)	60 (Cathode) 0 (Anode) 0 (Liquid) 60 (Total)	133(Cathode) 300(Anode) 0(Liquid) 433(Total)	366 (Cathode) 15.1 (Anode) 289 (Liquid) 669 (Total)
Upstream	Estimation method	Order of magnitude estimate	Order of magnitude estimate	Order of magnitude estimate	Determined from Aspen Plus model + Factorial
	TAC (USD/tonneCO_2)	40	30	30	145

Table S28. Values used in the sensitivity analysis.

Category	Name	Unit	Worse	Base	Better
Raw Materials	CO_2	USD/tonne	-30	0	30
	DI water	USD/tonne	145	14.5	1.45
	Cooling water	USD/tonne	1.77	0.177	0.0177
	MEA	USD/tonne	14,000	1,400	140
	TEG	USD/tonne	10,000	1,000	100
Utilities	Electricity	USD/MWh	120	12	1.2
	Low pressure (LP) steam	USD/GJ	45.4	4.54	0.454
	High pressure (HP) steam	USD/GJ	56.6	5.66	0.566
	Refrigerant	USD/GJ	141.2	14.12	1.412
	Cooling water	USD/GJ	3.78	0.378	0.0378
Market Prices	C_2H_4	USD/tonne	96.7	967	9,670
	O_2	USD/tonne	50	500	5,000
	Syngas (H_2/CO)	USD/GJ	1.55	15.5	155
	C_2H_5OH	USD/tonne	125	1,250	12,500
Economic Parameters	Fixed costs	% of CAPEX	18	9	4.5
	Interest rate	%	20	10	5
	Lang Factor	-	8	4.05	2
	Depreciation	%	4	2	1

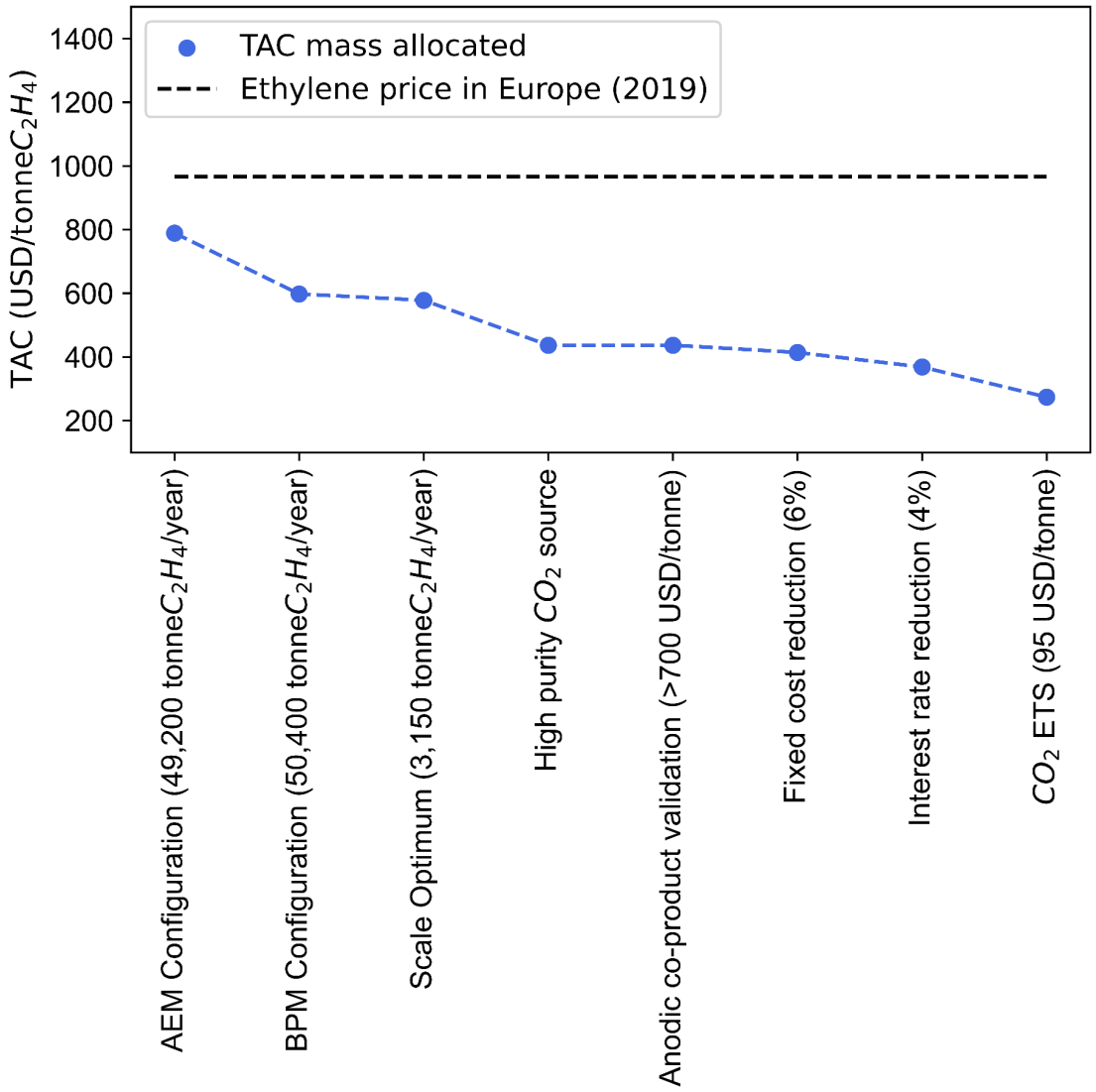

Figure S15. Roadmap to improve CO_2RR profitability via improvements in technical, deployment, and economic factors (Mass allocated TAC, break-even indicated by black line).

References

(1) Engel, D. W.; Dalton, A. C.; Anderson, K. K.; Sivaramakrishnan, C.; Lansing, C. *Development of Technology Readiness Level (TRL) Metrics and Risk Measures*; PNNL-21737; Pacific Northwest National Lab (PNNL): Richland, WA, US, 2012; p 19. https://doi.org/10.2172/1067968.able

(2) Roh, K.; Bardow, A.; Bongartz, D.; Burre, J.; Chung, W.; Deutz, S.; Han, D.; Heßelmann, M.; Kohlhaas, Y.; König, A.; Lee, J. S.; Meys, R.; Völker, S.; Wessling, M.; Lee, J. H.; Mitsos, A. Early-Stage Evaluation of Emerging CO_2 Utilization Technologies at Low Technology Readiness Levels. *Green Chem.* **2020**, *22* (12), 3842–3859. https://doi.org/10.1039/C9GC04440J.

(3) Netusil, M.; Ditl, P. Comparison of Three Methods for Natural Gas Dehydration. *J. Nat. Gas Chem.* **2011**, *20* (5), 471–476. https://doi.org/10.1016/S1003-9953(10)60218-6.

(4) Reijerkerk, S. R.; Jordana, R.; Nijmeijer, K.; Wessling, M. Highly Hydrophilic, Rubbery Membranes for CO_2 Capture and Dehydration of Flue Gas. *Int. J. Greenh. Gas Control* **2011**, *5* (1), 26–36. https://doi.org/10.1016/j.ijggc.2010.06.014.

(5) Sijbesma, H.; Nymeijer, K.; van Marwijk, R.; Heijboer, R.; Potreck, J.; Wessling, M. Flue Gas Dehydration Using Polymer Membranes. *J. Membr. Sci.* **2008**, *313* (1–2), 263–276. https://doi.org/10.1016/j.memsci.2008.01.024.

(6) Takht Ravanchi, M.; Kaghazchi, T.; Kargari, A. Application of Membrane Separation Processes in Petrochemical Industry: A Review. *Desalination* **2009**, *235* (1–3), 199–244. https://doi.org/10.1016/j.desal.2007.10.042.

(7) Rao, A. B.; Rubin, E. S. A Technical, Economic, and Environmental Assessment of Amine-Based CO_2 Capture Technology for Power Plant Greenhouse Gas Control. *Environ. Sci. Technol.* **2002**, *36* (20), 4467–4475. https://doi.org/10.1021/es0158861.

(8) Rochelle, G. T. Amine Scrubbing for CO_2 Capture. *Science* **2009**, *325* (5948), 1652–1654. https://doi.org/10.1126/science.1176731.

(9) Chapel, D. G.; Mariz, C. L. Recovery of CO_2 from Flue Gases: Commercial Trends. In *Canadian Society of Chemical Engineers annual meeting*; Saskatoon, SK, CA, 1999; p 17.

(10) Sayari, A.; Belmabkhout, Y.; Serna-Guerrero, R. Flue Gas Treatment via CO_2 Adsorption. *Chem. Eng. J.* **2011**, *171* (3), 760–774. https://doi.org/10.1016/j.cej.2011.02.007.

(11) Song, C.; Liu, Q.; Deng, S.; Li, H.; Kitamura, Y. Cryogenic-Based CO_2 Capture Technologies: State-of-the-Art Developments and Current Challenges. *Renew. Sustain. Energy Rev.* **2019**, *101*, 265–278. https://doi.org/10.1016/j.rser.2018.11.018.

(12) Zanganeh, K. E.; Shafeen, A.; Salvador, C. CO_2 Capture and Development of an Advanced Pilot-Scale Cryogenic Separation and Compression Unit. *Energy Procedia* **2009**, *1* (1), 247–252. https://doi.org/10.1016/j.egypro.2009.01.035.

(13) Brunetti, A.; Scura, F.; Barbieri, G.; Drioli, E. Membrane Technologies for CO_2 Separation. *J. Membr. Sci.* **2010**, *359* (1–2), 115–125. https://doi.org/10.1016/j.memsci.2009.11.040.

(14) Baker, R. W.; Lokhandwala, K. Natural Gas Processing with Membranes: An Overview. *Ind. Eng. Chem. Res.* **2008**, *47* (7), 2109–2121. https://doi.org/10.1021/ie071083w.

(15) Bryan, P. F. Removal of Propylene from Fuel‐Grade Propane. *Sep. Purif. Rev.* **2004**, *33* (2), 157–182. https://doi.org/10.1081/SPM-200042095.

(16) Asinger, F. The Concentration or Isolation of Olefins from Olfein-Containing Gases. In

Mono-Olefins; Elsevier, 1968; pp 218–302. https://doi.org/10.1016/B978-0-08-011547-4.50006-9.
(17) Eldridge, R. B. Olefin/Paraffin Separation Technology: A Review. *Ind. Eng. Chem. Res.* **1993**, *32* (10), 2208–2212.
(18) van Zandvoort, I.; van der Waal, J. K.; Ras, E.-J.; de Graaf, R.; Krishna, R. Highlighting Non-Idealities in C_2H_4/CO_2 Mixture Adsorption in 5A Zeolite. *Sep. Purif. Technol.* **2019**, *227*, 115730. https://doi.org/10.1016/j.seppur.2019.115730.
(19) van Zandvoort, I.; Ras, E.-J.; Graaf, R. de; Krishna, R. Using Transient Breakthrough Experiments for Screening of Adsorbents for Separation of C_2H_4/CO_2 Mixtures. *Sep. Purif. Technol.* **2020**, *241*, 116706. https://doi.org/10.1016/j.seppur.2020.116706.
(20) Dutta, N. N.; Patil, G. S. Developments in CO Separation. *Gas Sep. Purif.* **1995**, *9* (4), 277–283. https://doi.org/10.1016/0950-4214(95)00011-Y.
(21) Park, C. H.; Lee, J. H.; Kim, N. U.; Kong, C.-I.; Kim, J.-H.; Kim, J. H. Solid-State Facilitated Transport of Carbon Monoxide through Mixed Matrix Membranes. *J. Membr. Sci.* **2019**, *592*, 117373. https://doi.org/10.1016/j.memsci.2019.117373.
(22) Yin, H.; Yip, A. C. K. A Review on the Production and Purification of Biomass-Derived Hydrogen Using Emerging Membrane Technologies. *Catalysts* **2017**, *7* (10), 297. https://doi.org/10.3390/catal7100297.
(23) Picciotti, M.; Barbieri, G.; Drioli, E.; Bernardo, P.; Criscuoli, A.; Clarizia, G.; Fleres, G. Applications of Membrane Unit Operations in Ethylene Process. *Clean Technol. Environ. Policy* **2004**, *6* (2), 78–95. https://doi.org/10.1007/s10098-003-0225-8.
(24) Bozorg, M.; Addis, B.; Piccialli, V.; Ramírez-Santos, Á. A.; Castel, C.; Pinnau, I.; Favre, E. Polymeric Membrane Materials for Nitrogen Production from Air: A Process Synthesis Study. *Chem. Eng. Sci.* **2019**, *207*, 1196–1213. https://doi.org/10.1016/j.ces.2019.07.029.
(25) Lokhandwala, K. A.; Pinnau, I.; He, Z.; Amo, K. D.; DaCosta, A. R.; Wijmans, J. G.; Baker, R. W. Membrane Separation of Nitrogen from Natural Gas: A Case Study from Membrane Synthesis to Commercial Deployment. *J. Membr. Sci.* **2010**, *346* (2), 270–279. https://doi.org/10.1016/j.memsci.2009.09.046.
(26) Küüt, A.; Ritslaid, K.; Küüt, K.; Ilves, R.; Olt, J. State of the Art on the Conventional Processes for Ethanol Production. In *Ethanol*; Elsevier, 2019; pp 61–101. https://doi.org/10.1016/B978-0-12-811458-2.00003-1.
(27) Aspen Plus. *Rate Based Model of the CO_2 Capture Process by MEA Using Aspen Plus*; Aspen Technology Inc.: Bedford, MA, USA, 2008.
(28) Zhang, Y.; Chen, H.; Chen, C.-C.; Plaza, J. M.; Dugas, R.; Rochelle, G. T. Rate-Based Process Modeling Study of CO_2 Capture with Aqueous Monoethanolamine Solution. *Ind. Eng. Chem. Res.* **2009**, *48* (20), 9233–9246. https://doi.org/10.1021/ie900068k.
(29) Madeddu, C.; Errico, M.; Baratti, R. Process Analysis for the Carbon Dioxide Chemical Absorption–Regeneration System. *Appl. Energy* **2018**, *215*, 532–542. https://doi.org/10.1016/j.apenergy.2018.02.033.
(30) Mathias, P. M.; Gilmartin, J. P. Quantitative Evaluation of the Effect of Uncertainty in Property Models on the Simulated Performance of Solvent-Based CO2-Capture. *Energy Procedia* **2014**, *63*, 1171–1185. https://doi.org/10.1016/j.egypro.2014.11.127.
(31) Li, G.; Bai, P. New Operation Strategy for Separation of Ethanol–Water by Extractive Distillation. *Ind. Eng. Chem. Res.* **2012**, *51* (6), 2723–2729. https://doi.org/10.1021/ie2026579.

(32) Larijani, M. A.; Bayat, M.; Afshin, H. Simulation and Performance Improvement of Cryogenic Distillation Column, Using Enhanced Predictive Peng–Robinson Equation of State. *Fluid Phase Equilibria* **2019**, *489*, 117–130. https://doi.org/10.1016/j.fluid.2019.01.022.
(33) Yang, A.; Zou, H.; Chien, I.-L.; Wang, D.; Wei, S.; Ren, J.; Shen, W. Optimal Design and Effective Control of Triple-Column Extractive Distillation for Separating Ethyl Acetate/Ethanol/Water with Multiazeotrope. *Ind. Eng. Chem. Res.* **2019**, *58* (17), 7265–7283. https://doi.org/10.1021/acs.iecr.9b00466.
(34) Office of Energy Efficiency & Renewable Energy. *DOE Technical Targets for Hydrogen Production from Electrolysis*. Hydrogen and fuel cell technologies office. https://www.energy.gov/eere/fuelcells/doe-technical-targets-hydrogen-production-electrolysis (accessed 2021-01-05).
(35) Kim, J.; Guo, W.; Kim, H.; Choe, S.; Kim, S. Y.; Ahn, S. H. Gaseous CO_2 Electrolysis: Progress, Challenges, and Prospects. *ACS Sustain. Chem. Eng.* **2022**, *10* (43), 14092–14111. https://doi.org/10.1021/acssuschemeng.2c04501.
(36) Edwards, J. P.; Alerte, T.; O'Brien, C. P.; Gabardo, C. M.; Liu, S.; Wicks, J.; Gaona, A.; Abed, J.; Xiao, Y. C.; Young, D.; Sedighian Rasouli, A.; Sarkar, A.; Jaffer, S. A.; MacLean, H. L.; Sargent, E. H.; Sinton, D. Pilot-Scale CO_2 Electrolysis Enables a Semi-Empirical Electrolyzer Model. *ACS Energy Lett.* **2023**, *8* (6), 2576–2584. https://doi.org/10.1021/acsenergylett.3c00620.
(37) Lu, G. Q.; Liu, F. Q.; Wang, C.-Y. Water Transport Through Nafion 112 Membrane in DMFCs. *Electrochem. Solid-State Lett.* **2005**, *8* (1), A1. https://doi.org/10.1149/1.1825312.
(38) Towler, G.; Sinnott, R. *Chemical Engineering Design: Principles, Practice and Economics of Plant and Process Design*, 3rd edition.; Butterworth-Heinemann: Cambridge, MA, USA, 2021. https://doi.org/10.1016/B978-0-12-821179-3.12001-1.
(39) Chauvel, A.; Fournier, G.; Raimbault, C. *Manual of Process Economic Evaluation*, Expanded edition.; Institut Français du Pétrole Publications; Editions TECHNIP: Paris, FR, 2003.
(40) Jouny, M.; Luc, W.; Jiao, F. General Techno-Economic Analysis of CO_2 Electrolysis Systems. *Ind. Eng. Chem. Res.* **2018**, *57* (6), 2165–2177. https://doi.org/10.1021/acs.iecr.7b03514.
(41) Jenkins, S. *2019 Chemical Engineering Plant Cost Index Annual Average*. Chemical Engineering. https://www.chemengonline.com/2019-chemical-engineering-plant-cost-index-annual-average/ (accessed 2023-06-12).
(42) World Bank. *State and Trends of Carbon Pricing 2022*; World Bank: Washington, DC, US, 2022. http://hdl.handle.net/10986/37455 (accessed 2023-06-03).
(43) Turton, R.; Baillie, R. C.; Whiting, W. B.; Shaeiwitz, J. A. *Analysis, Synthesis, and Design of Chemical Processes*, 3rd edition.; Prentice Hall: Upper Saddle River, NJ, US, 2008.
(44) De Luna, P.; Hahn, C.; Higgins, D.; Jaffer, S. A.; Jaramillo, T. F.; Sargent, E. H. What Would It Take for Renewably Powered Electrosynthesis to Displace Petrochemical Processes? *Science* **2019**, *364* (6438), eaav3506. https://doi.org/10.1126/science.aav3506.
(45) Independent Electricity System Operator. *HOEP Monthly Averages ¢/KWh*; 2020. https://www.ieso.ca/en/Power-Data/Data-Directory (accessed 2023-06-06).

(46) International Energy Agency. *Key World Energy Statistics 2020*; Paris, FR, 2020. https://www.iea.org/reports/key-world-energy-statistics-2020 (accessed 2021-09-02).
(47) Canada Energy Regulator. *Natural Gas*. https://www.cer-rec.gc.ca/en/data-analysis/energy-commodities/natural-gas/ (accessed 2023-06-12).
(48) International Energy Agency. *World Energy Investment 2020*; Paris, FR, 2020. https://www.iea.org/reports/world-energy-investment-2020 (accessed 2021-09-02).
(49) Han, J. Catalytic Syngas Production from Carbon Dioxide of Two Emission Source Scenarios: Techno-Economic Assessment. *J. Ind. Eng. Chem.* **2021**, *96*, 213–218. https://doi.org/10.1016/j.jiec.2021.01.019.
(50) Energy Technology Systems Analysis Program. *Biogas and Bio-syngas Production*. https://iea-etsap.org/E-TechDS/PDF/P11_BiogasProd_ML_Dec2013_GSOK.pdf (accessed 2023-06-27).
(51) Energy Technology Systems Analysis Program. *Syngas Production from Coal*. https://iea-etsap.org/E-TechDS/PDF/P05-Coal-gasification-GS-gct-AD_gs.pdf (accessed 2023-06-27).
(52) Yao, Y.; Graziano, D. J.; Riddle, M.; Cresko, J.; Masanet, E. Understanding Variability To Reduce the Energy and GHG Footprints of U.S. Ethylene Production. *Environ. Sci. Technol.* **2015**, *49* (24), 14704–14716. https://doi.org/10.1021/acs.est.5b03851.
(53) Yang, M.; You, F. Comparative Techno-Economic and Environmental Analysis of Ethylene and Propylene Manufacturing from Wet Shale Gas and Naphtha. *Ind. Eng. Chem. Res.* **2017**, *56* (14), 4038–4051. https://doi.org/10.1021/acs.iecr.7b00354.
(54) Bullin, K.; Krouskop, P. Compositional Variety Complicates Processing Plans for US Shale Gas. *Oil Gas J.* **2009**, *107* (10), 50–55.
(55) Ranjan, P.; Kannan, P.; Al Shoaibi, A.; Srinivasakannan, C. Modeling of Ethane Thermal Cracking Kinetics in a Pyrocracker. *Chem. Eng. Technol.* **2012**, *35* (6), 1093–1097. https://doi.org/10.1002/ceat.201100529.
(56) Froment, G. P.; Van De Steene, B. O.; Van Damme, P. S.; Narayanan, S.; Goossens, A. G. Thermal Cracking of Ethane and Ethane-Propane Mixtures. *Ind. Eng. Chem. Process Des. Dev.* **1976**, *15* (4), 495–504. https://doi.org/10.1021/i260060a004.
(57) Rosli, M. N.; Aziz, N. Simulation of Ethane Steam Cracking with Severity Evaluation. *IOP Conf. Ser. Mater. Sci. Eng.* **2016**, *162* (1), 012017. https://doi.org/10.1088/1757-899X/162/1/012017.
(58) Rosli, M. N.; Aziz, N. Steady State Modelling of Steam Cracking Furnace Radiant Section Using Aspen PLUS. *Mater. Today Proc.* **2018**, *5* (10), 21780–21789. https://doi.org/10.1016/j.matpr.2018.07.032.
(59) Mistré, M.; Crénes, M.; Hafner, M. Shale Gas Production Costs: Historical Developments and Outlook. *Energy Strategy Rev.* **2018**, *20*, 20–25. https://doi.org/10.1016/j.esr.2018.01.001.
(60) Sisler, J.; Khan, S.; Ip, A. H.; Schreiber, M. W.; Jaffer, S. A.; Bobicki, E. R.; Dinh, C.-T.; Sargent, E. H. Ethylene Electrosynthesis: A Comparative Techno-Economic Analysis of Alkaline vs Membrane Electrode Assembly vs CO_2–CO–C_2H_4 Tandems. *ACS Energy Lett.* **2021**, *6* (3), 997–1002. https://doi.org/10.1021/acsenergylett.0c02633.
(61) Shin, H.; Hansen, K. U.; Jiao, F. Techno-Economic Assessment of Low-Temperature Carbon Dioxide Electrolysis. *Nat. Sustain.* **2021**, *4* (10), 911–919.

https://doi.org/10.1038/s41893-021-00739-x.