NadyScope

A USB-powered oscilloscope with a web-based interface and an integrated AI assistant(TBD).

Features:
- 1 Analog input (up to 26 volts)
- 4 Analog outputs (up to 25 mA per channel)
- 1 isolated I2C input

TBD:
- Power circuit
- Power budget diagram
- System block diagram
- Maybe an SPI isolator

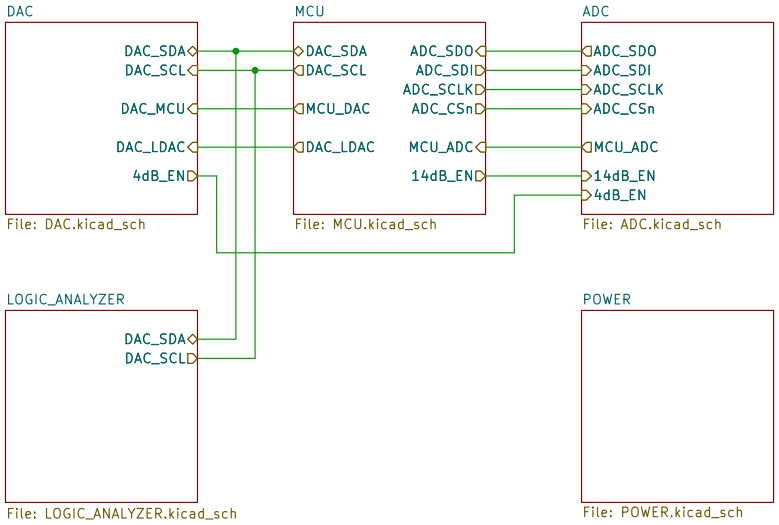

MCU Section

- To ensure that the power supply to the ESP32-C3 chip is stable during power-up, it is advised to add an RC delay circuit at the EN pin. The recommended setting for the RC delay circuit is usually R = 10 kΩ and C = 1 μF. However, specific parameters should be adjusted based on the power-up timing of the module

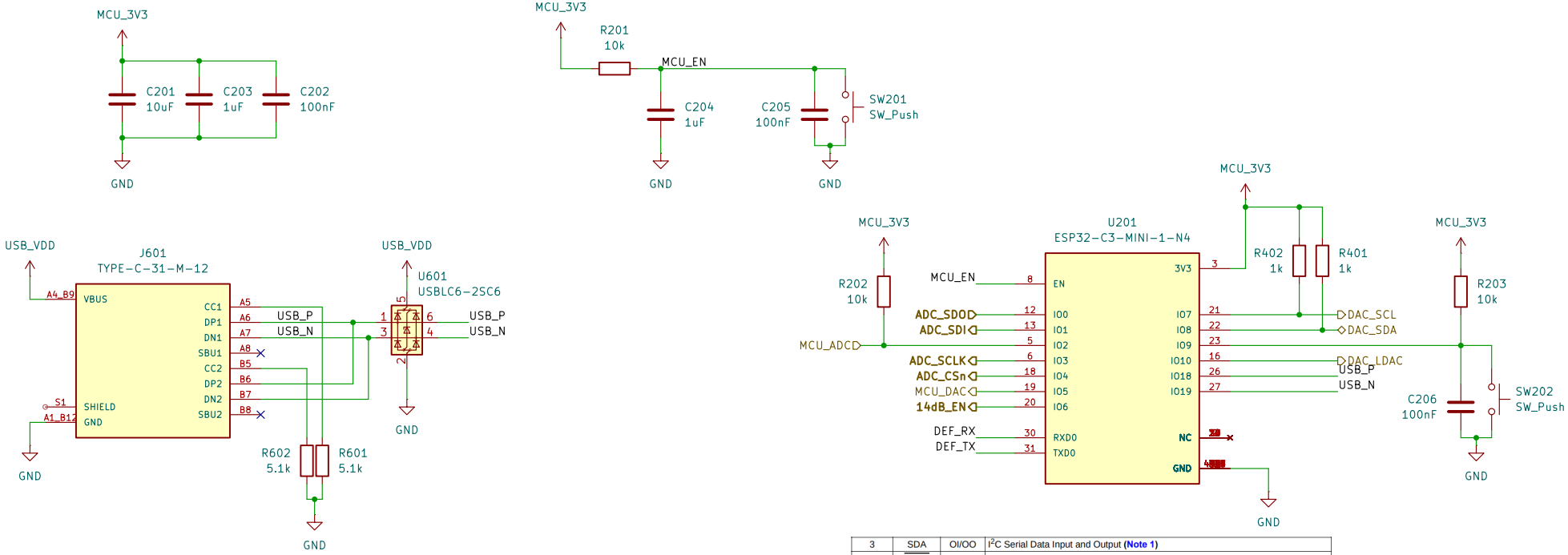

3	SDA	OI/OO	I²C Serial Data Input and Output (**Note 1**)
4	$\overline{\text{LDAC}}$	ST	This pin is used for two purposes: (a) Synchronization Input. It is used to transfer the contents of the DAC input registers to the output registers (V_{OUT}). (b) Select the device for reading and writing I²C address bits. (**Note 2**)

Note 1: This pin needs an external pull-up resistor from V_{DD} line. Leave this pin float if it is not used.
2: This pin can be driven by MCU.

Table 4-3. Chip Boot Mode Control

Boot Mode	GPIO2 [2]	GPIO8	GPIO9
SPI boot mode	1	Any value	**1**
Joint download boot mode [3]	1	1	0

[1] **Bold** marks the default value and configuration.
[2] GPIO2 actually does not determine SPI Boot and Joint Download Boot mode, but it is recommended to pull this pin up due to glitches.
[3] Joint Download Boot mode supports the following download methods:
- USB-Serial-JTAG Download Boot
- UART Download Boot

ADC Section

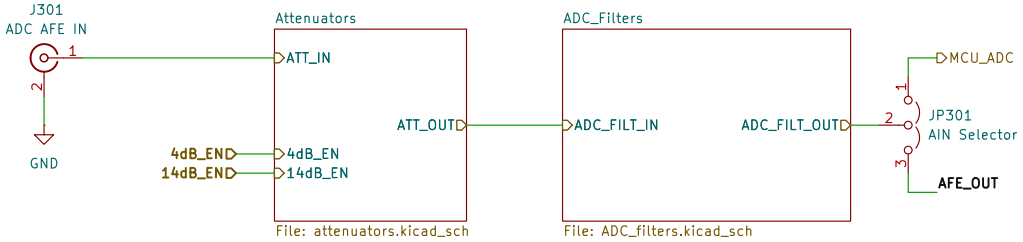
J301
ADC AFE IN
1
2
GND
Attenuators
ATT_IN
ATT_OUT
4dB_EN
14dB_EN
4dB_END
14dB_END
File: attenuators.kicad_sch
ADC_Filters
ADC_FILT_IN
ADC_FILT_OUT
File: ADC_filters.kicad_sch
MCU_ADC
JP301
AIN Selector
AFE_OUT

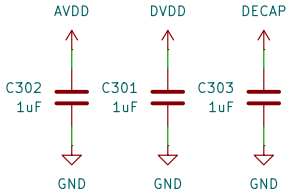
AVDD
DVDD
DECAP
C302
1uF
C301
1uF
C303
1uF
GND
GND
GND

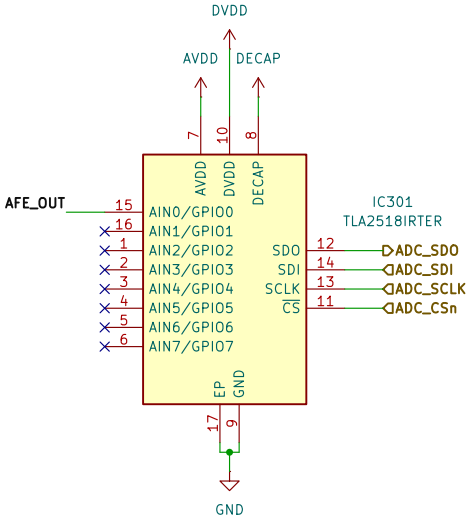
DVDD
AVDD
DECAP
AFE_OUT
IC301
TLA2518IRTER
AIN0/GPIO0
AIN1/GPIO1
AIN2/GPIO2
AIN3/GPIO3
AIN4/GPIO4
AIN5/GPIO5
AIN6/GPIO6
AIN7/GPIO7
SDO
SDI
SCLK
CS
ADC_SDO
ADC_SDI
ADC_SCLK
ADC_CSn
EP
GND
GND

DAC Section

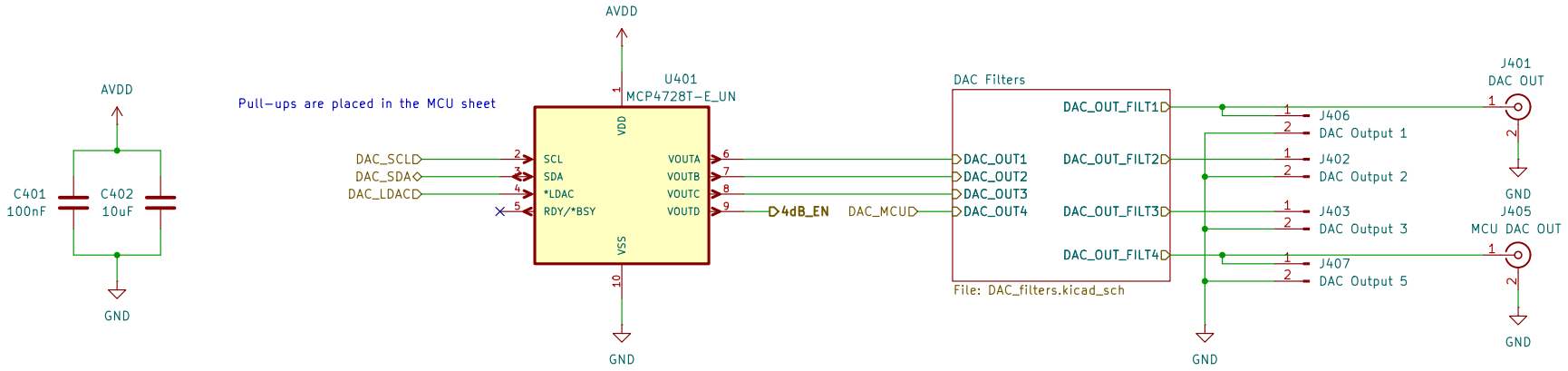
AVDD
C401
100nF
C402
10uF
GND
Pull-ups are placed in the MCU sheet
AVDD
U401
MCP4728T-E_UN
VDD
VSS
SCL
SDA
*LDAC
RDY/*BSY
VOUTA
VOUTB
VOUTC
VOUTD
DAC_SCL
DAC_SDA
DAC_LDAC
4dB_EN
DAC_MCU
GND
DAC Filters
DAC_OUT1
DAC_OUT2
DAC_OUT3
DAC_OUT4
DAC_OUT_FILT1
DAC_OUT_FILT2
DAC_OUT_FILT3
DAC_OUT_FILT4
File: DAC_filters.kicad_sch
GND
J406
DAC Output 1
J402
DAC Output 2
J403
DAC Output 3
J407
DAC Output 5
J401
DAC OUT
GND
J405
MCU DAC OUT
GND

Logic Analyzer Section

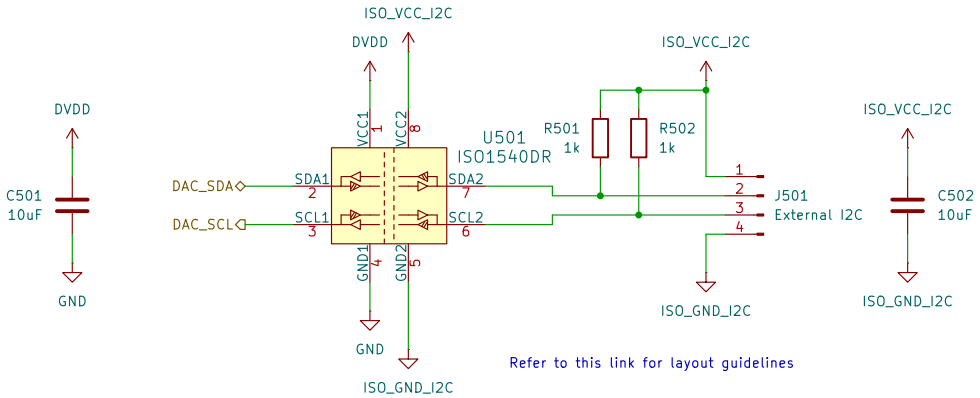

Power Section

Input Attenuators Section

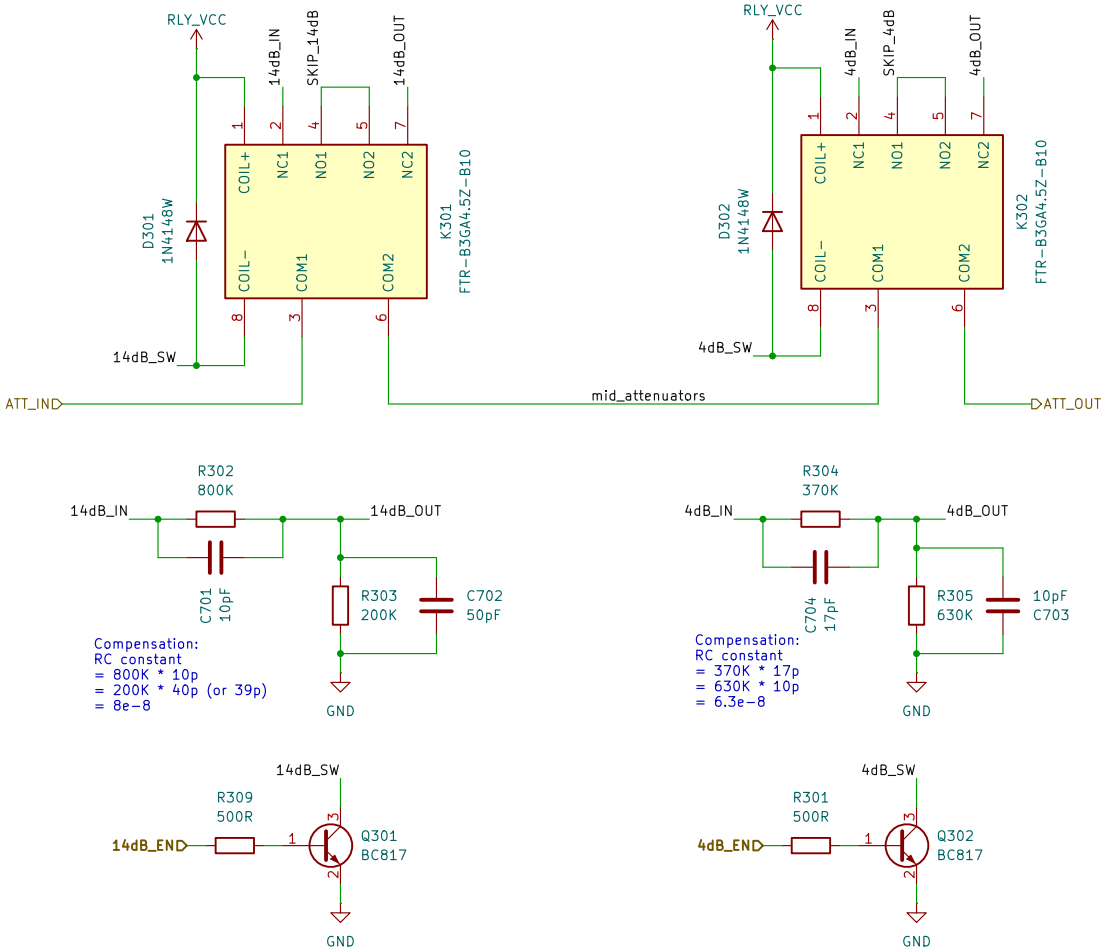

4dB EN	14dB EN	Max. Input Voltage
Y	Y	3.3V
Y	N	5V
N	Y	16V
N	N	26V

With 4 voltage settings, the default is the highest setting and the MCU would switch down if the voltage is detected to fit within tighter ones.

ADC Filters Section

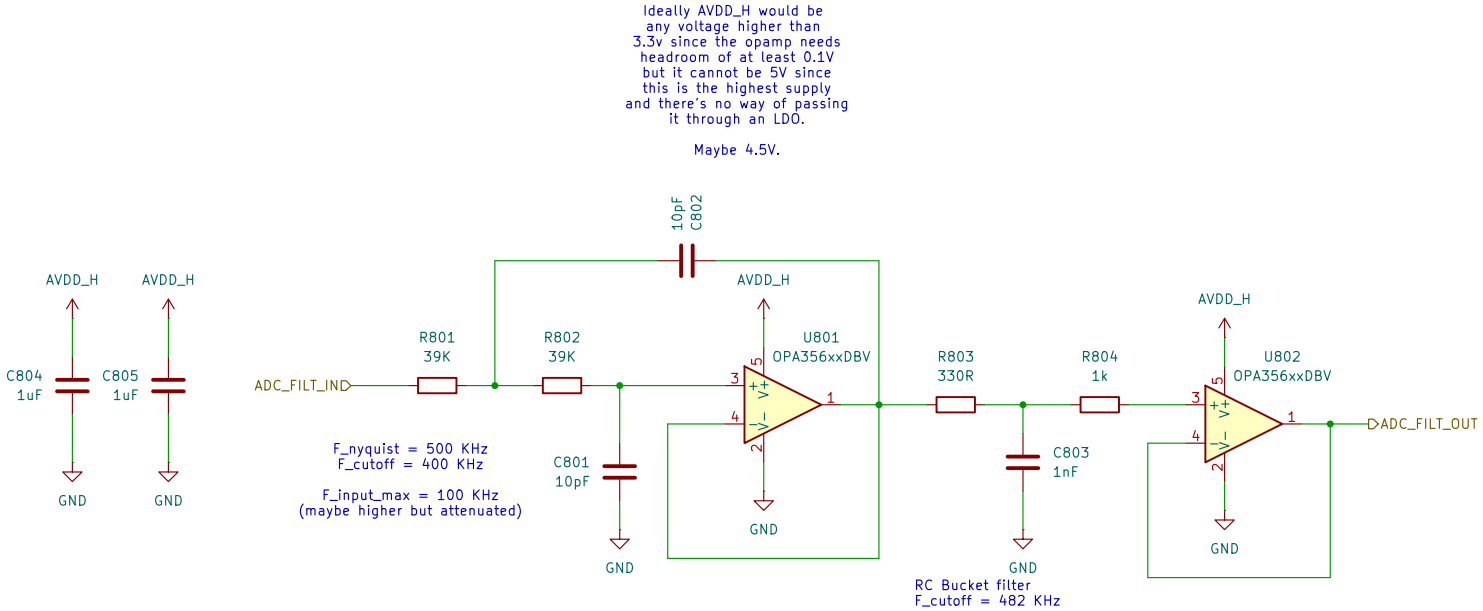

DAC Filters Section

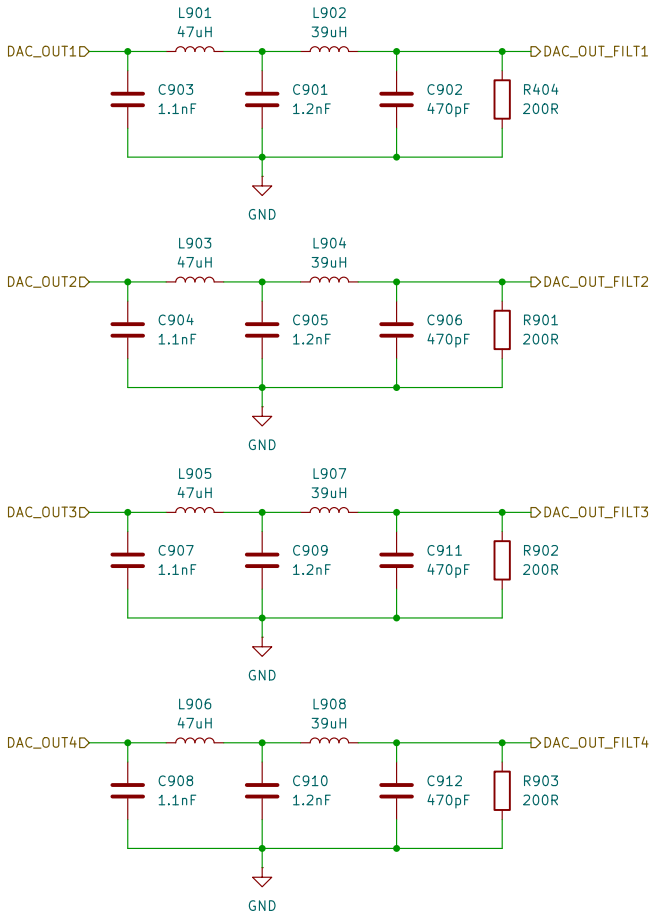

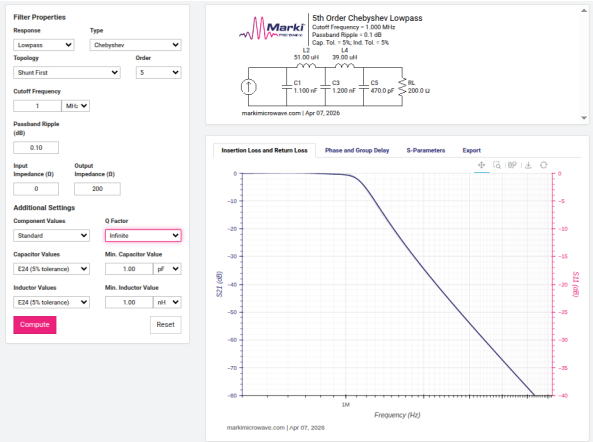
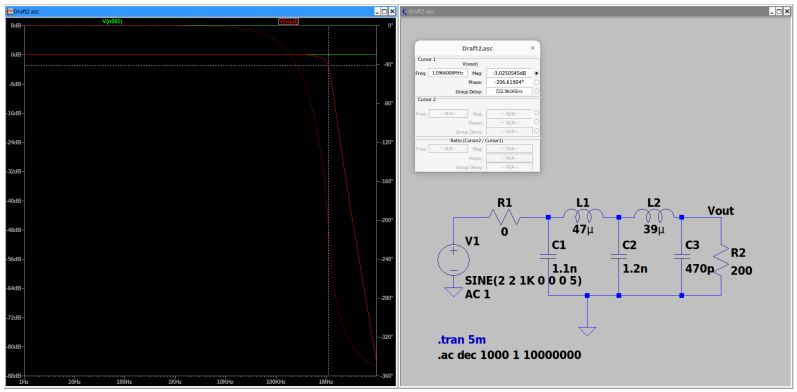
F_cutoff = 1 MHz
(calculated using this link)