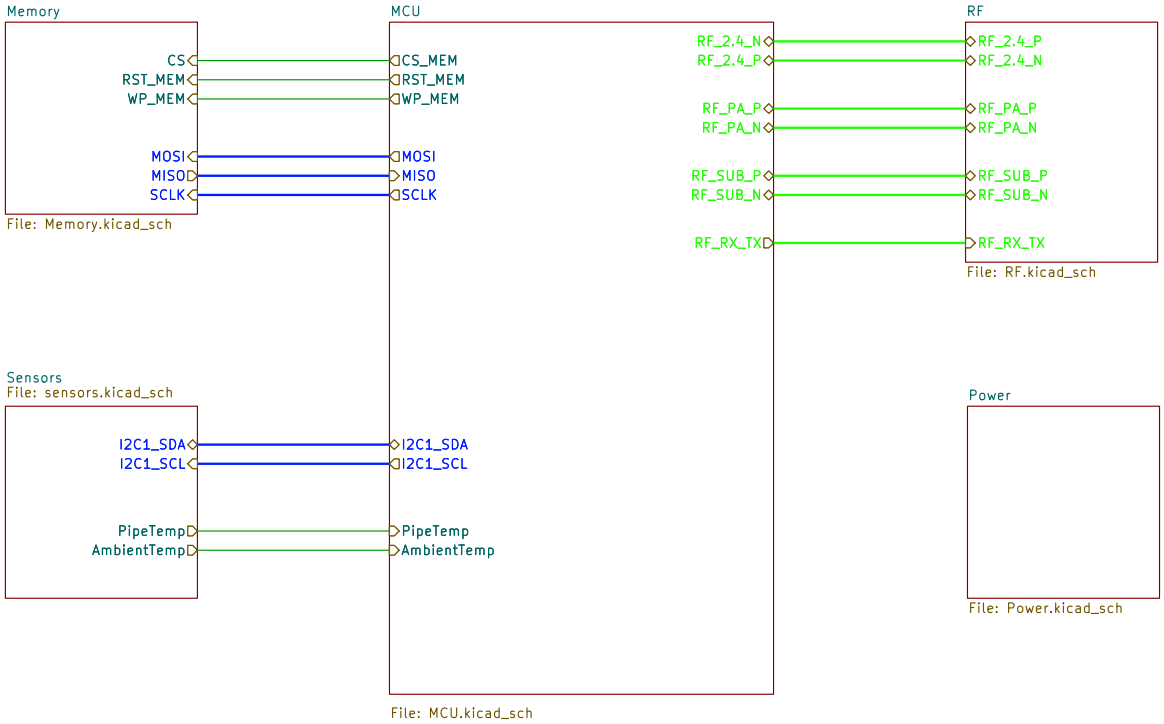
Memory
CS
RST_MEM
WP_MEM
MOSI
MISO
SCLK
File: Memory.kicad_sch
MCU
CS_MEM
RST_MEM
WP_MEM
MOSI
MISO
SCLK
RF_2.4_N
RF_2.4_P
RF_PA_P
RF_PA_N
RF_SUB_P
RF_SUB_N
RF_RX_TX
I2C1_SDA
I2C1_SCL
PipeTemp
AmbientTemp
File: MCU.kicad_sch
RF
RF_2.4_P
RF_2.4_N
RF_PA_P
RF_PA_N
RF_SUB_P
RF_SUB_N
RF_RX_TX
File: RF.kicad_sch
Sensors
File: sensors.kicad_sch
I2C1_SDA
I2C1_SCL
PipeTemp
AmbientTemp
Power
File: Power.kicad_sch

MCU SECTION

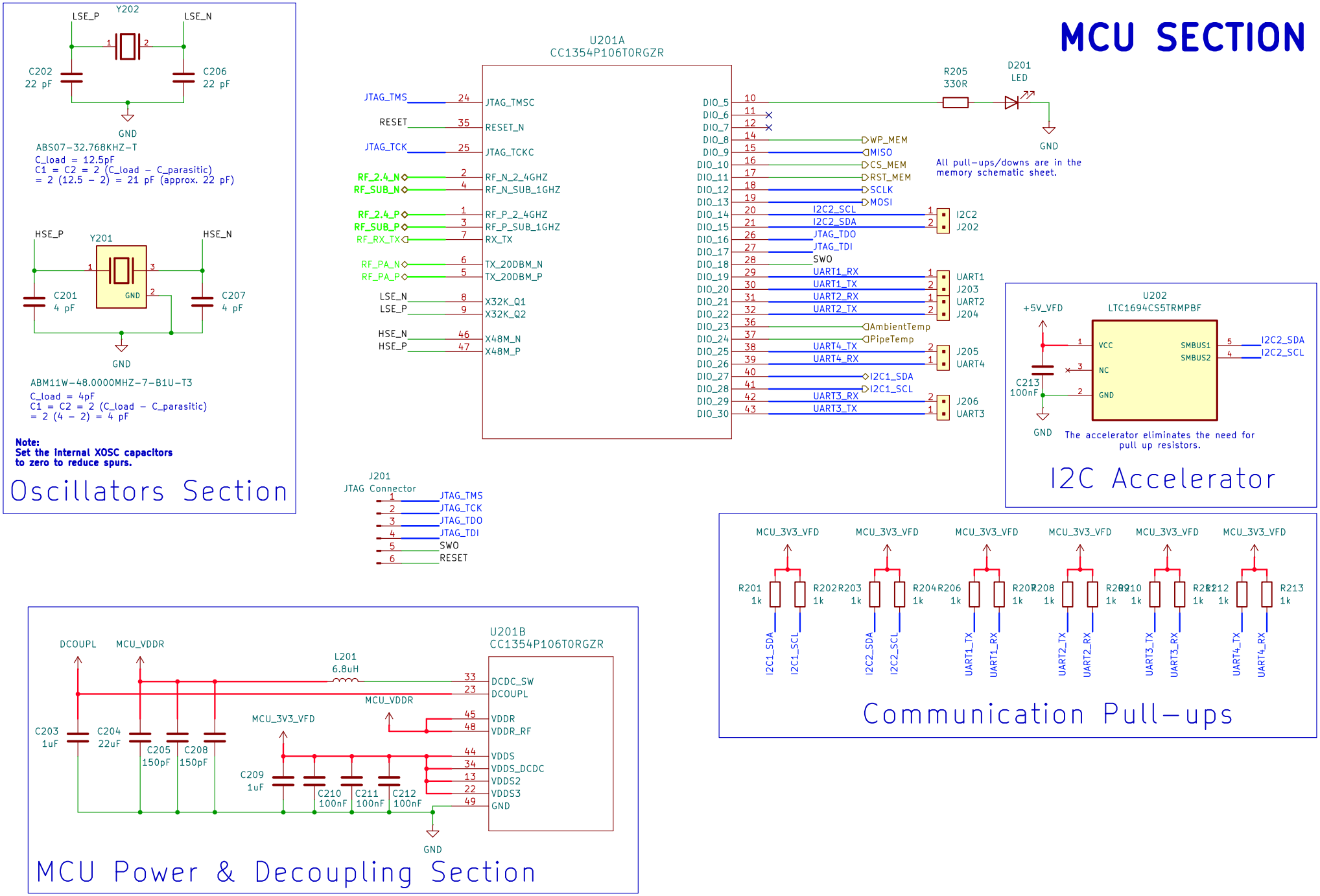
Y202
LSE_P
LSE_N
C202
22 pF
C206
22 pF
GND
ABS07-32.768KHZ-T
C_load = 12.5pF
C1 = C2 = 2 (C_load - C_parasitic)
= 2 (12.5 - 2) = 21 pF (approx. 22 pF)
HSE_P
Y201
HSE_N
C201
4 pF
C207
4 pF
GND
ABM11W-48.0000MHZ-7-B1U-T3
C_load = 4pF
C1 = C2 = 2 (C_load - C_parasitic)
= 2 (4 - 2) = 4 pF
Note:
Set the internal XOSC capacitors
to zero to reduce spurs.
Oscillators Section
U201A
CC1354P106T0RGZR
JTAG_TMS
RESET
JTAG_TCK
RF_2.4_N
RF_SUB_N
RF_2.4_P
RF_SUB_P
RF_RX_TX
RF_PA_N
RF_PA_P
LSE_N
LSE_P
HSE_N
HSE_P
JTAG_TMSC
RESET_N
JTAG_TCKC
RF_N_2_4GHZ
RF_N_SUB_1GHZ
RF_P_2_4GHZ
RF_P_SUB_1GHZ
RX_TX
TX_20DBM_N
TX_20DBM_P
X32K_Q1
X32K_Q2
X48M_N
X48M_P
DIO_5
DIO_6
DIO_7
DIO_8
DIO_9
DIO_10
DIO_11
DIO_12
DIO_13
DIO_14
DIO_15
DIO_16
DIO_17
DIO_18
DIO_19
DIO_20
DIO_21
DIO_22
DIO_23
DIO_24
DIO_25
DIO_26
DIO_27
DIO_28
DIO_29
DIO_30
WP_MEM
MISO
CS_MEM
RST_MEM
SCLK
MOSI
I2C2_SCL
I2C2_SDA
JTAG_TDO
JTAG_TDI
SWO
UART1_RX
UART1_TX
UART2_RX
UART2_TX
AmbientTemp
PipeTemp
UART4_TX
UART4_RX
I2C1_SDA
I2C1_SCL
UART3_RX
UART3_TX
I2C2
J202
UART1
J203
UART2
J204
J205
UART4
J206
UART3
R205
330R
D201
LED
GND
All pull-ups/downs are in the
memory schematic sheet.
J201
JTAG Connector
JTAG_TMS
JTAG_TCK
JTAG_TDO
JTAG_TDI
SWO
RESET
U202
LTC1694CS5TRMPBF
+5V_VFD
VCC
NC
GND
SMBUS1
SMBUS2
I2C2_SDA
I2C2_SCL
C213
100nF
GND
The accelerator eliminates the need for
pull up resistors.
I2C Accelerator
MCU_3V3_VFD
R201
1k
R202
1k
R203
1k
R204
1k
R206
1k
R207
1k
R208
1k
R209
1k
R210
1k
R211
1k
R212
1k
R213
1k
I2C1_SDA
I2C1_SCL
I2C2_SDA
I2C2_SCL
UART1_TX
UART1_RX
UART2_TX
UART2_RX
UART3_TX
UART3_RX
UART4_TX
UART4_RX
Communication Pull-ups
DCOUPL
MCU_VDDR
L201
6.8uH
U201B
CC1354P106T0RGZR
DCDC_SW
DCOUPL
VDDR
VDDR_RF
VDDS
VDDS_DCDC
VDDS2
VDDS3
GND
C203
1uF
C204
22uF
C205
150pF
C208
150pF
C209
1uF
C210
100nF
C211
100nF
C212
100nF
MCU_3V3_VFD
GND
MCU Power & Decoupling Section

RF SECTION

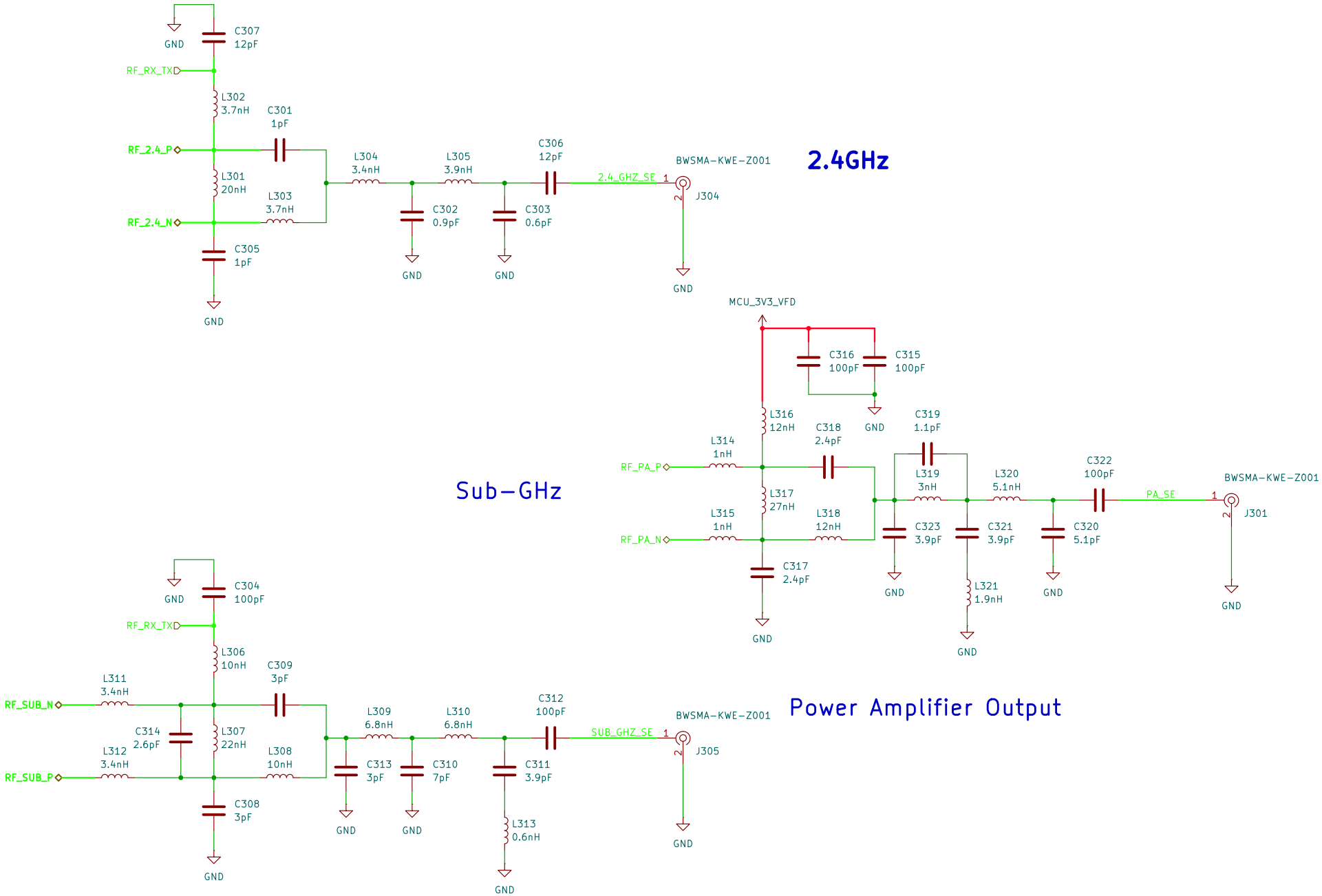
2.4GHz
Sub-GHz
Power Amplifier Output
RF_RX_TX
RF_2.4_P
RF_2.4_N
RF_PA_P
RF_PA_N
RF_SUB_N
RF_SUB_P
MCU_3V3_VFD
2.4_GHZ_SE
PA_SE
SUB_GHZ_SE
BWSMA-KWE-Z001
J304
J301
J305
GND
C307 12pF
L302 3.7nH
C301 1pF
L301 20nH
L303 3.7nH
C305 1pF
L304 3.4nH
L305 3.9nH
C306 12pF
C302 0.9pF
C303 0.6pF
C316 100pF
C315 100pF
L316 12nH
C318 2.4pF
C319 1.1pF
L314 1nH
L317 27nH
L315 1nH
L318 12nH
L319 3nH
L320 5.1nH
C322 100pF
C323 3.9pF
C321 3.9pF
C320 5.1pF
C317 2.4pF
L321 1.9nH
C304 100pF
L306 10nH
C309 3pF
L311 3.4nH
C314 2.6pF
L307 22nH
L312 3.4nH
L308 10nH
C308 3pF
L309 6.8nH
L310 6.8nH
C312 100pF
C313 3pF
C310 7pF
C311 3.9pF
L313 0.6nH

MEMORY SECTION

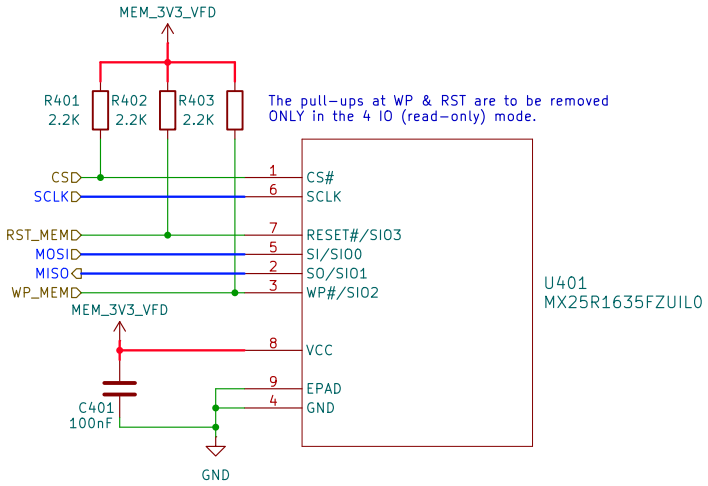

POWER SECTION

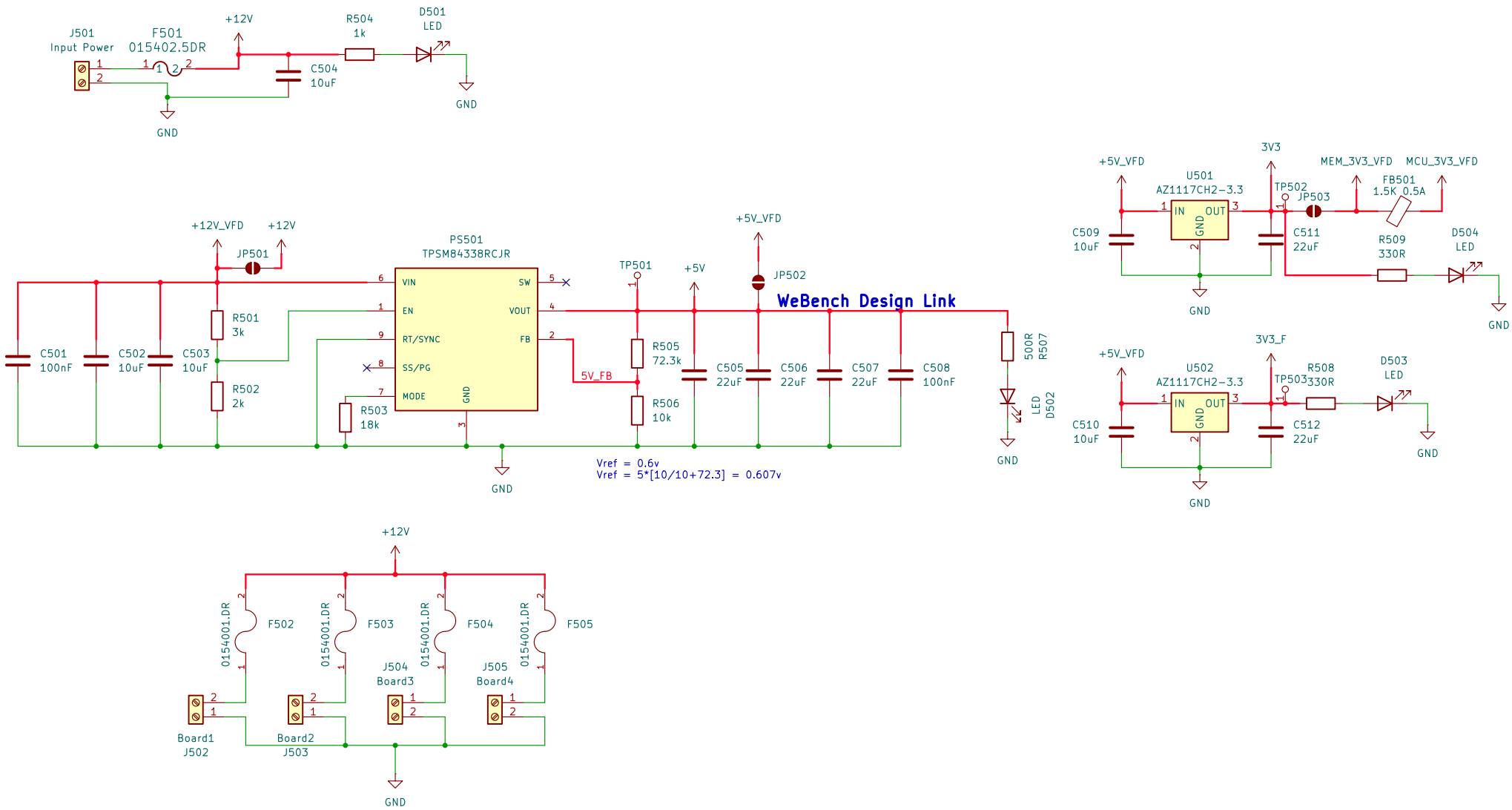

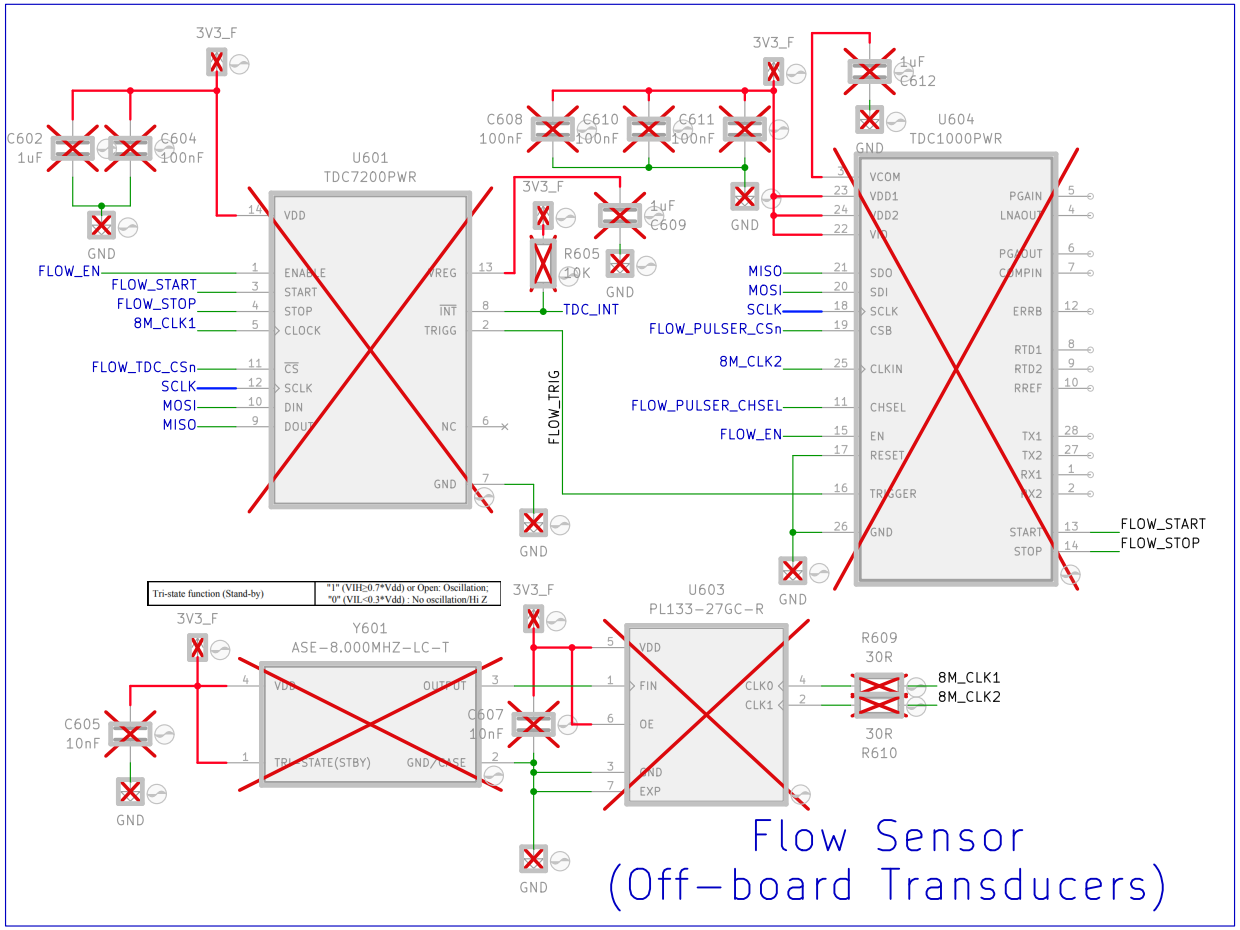

Flow Sensor
(Off-board Transducers)

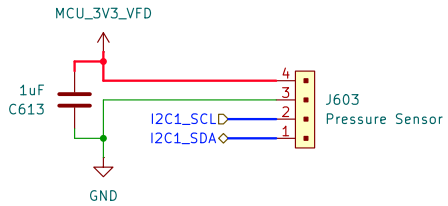

Pressure Sensor
(Off-board)

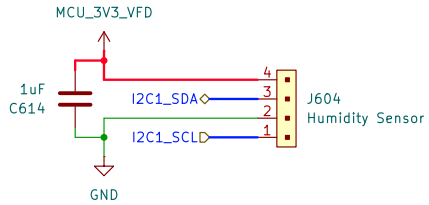

Humidity Sensor
(Off-board)

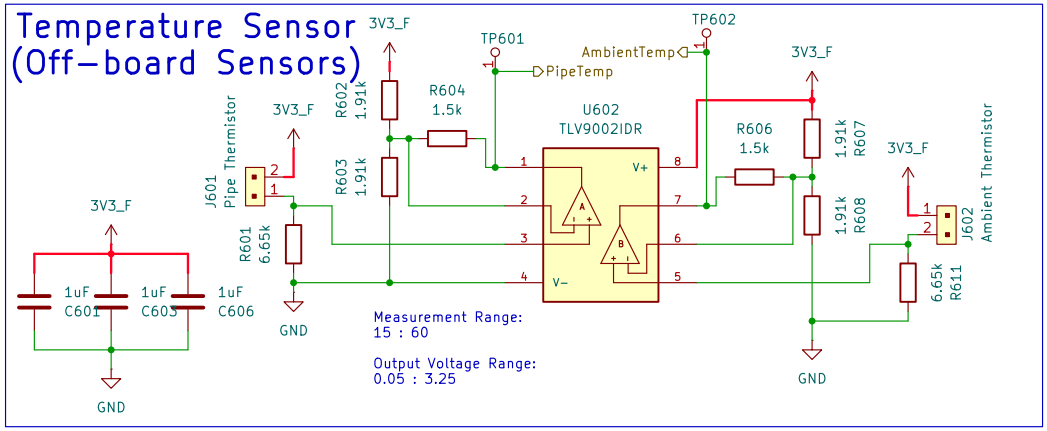

Temperature Sensor
(Off-board Sensors)

SENSORS SECTION