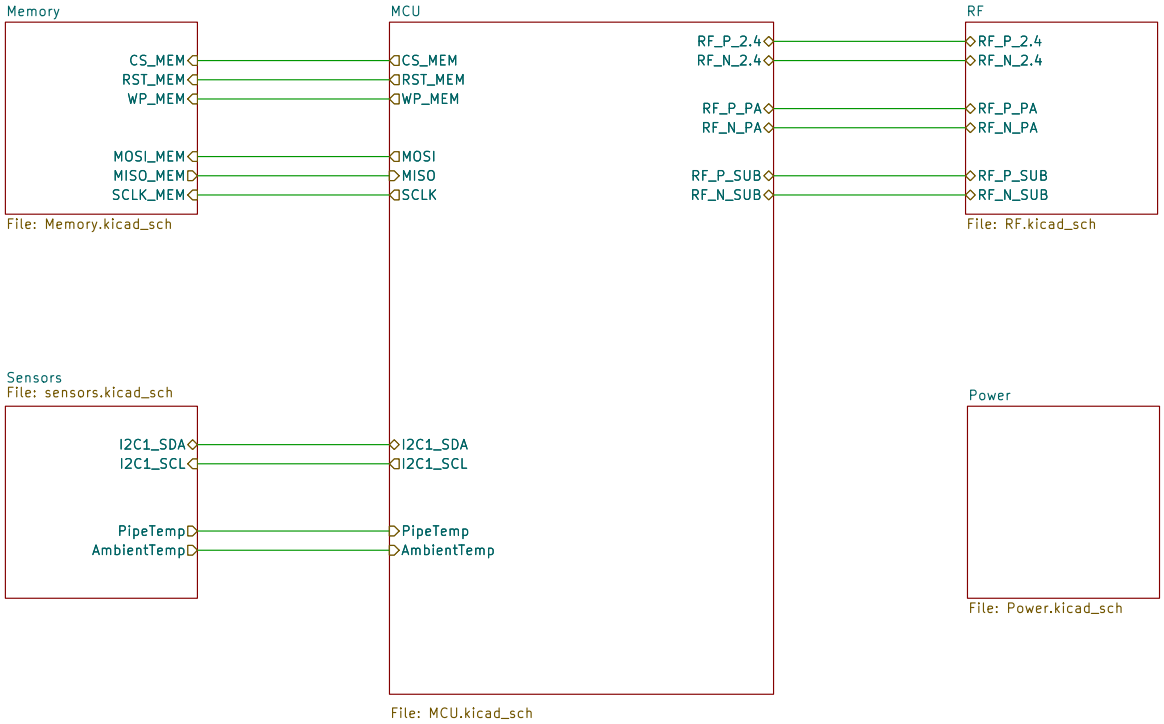
Memory
CS_MEM
RST_MEM
WP_MEM
MOSI_MEM
MISO_MEM
SCLK_MEM
File: Memory.kicad_sch
MCU
CS_MEM
RST_MEM
WP_MEM
MOSI
MISO
SCLK
RF_P_2.4
RF_N_2.4
RF_P_PA
RF_N_PA
RF_P_SUB
RF_N_SUB
I2C1_SDA
I2C1_SCL
PipeTemp
AmbientTemp
File: MCU.kicad_sch
RF
RF_P_2.4
RF_N_2.4
RF_P_PA
RF_N_PA
RF_P_SUB
RF_N_SUB
File: RF.kicad_sch
Sensors
File: sensors.kicad_sch
I2C1_SDA
I2C1_SCL
PipeTemp
AmbientTemp
Power
File: Power.kicad_sch

MCU SECTION

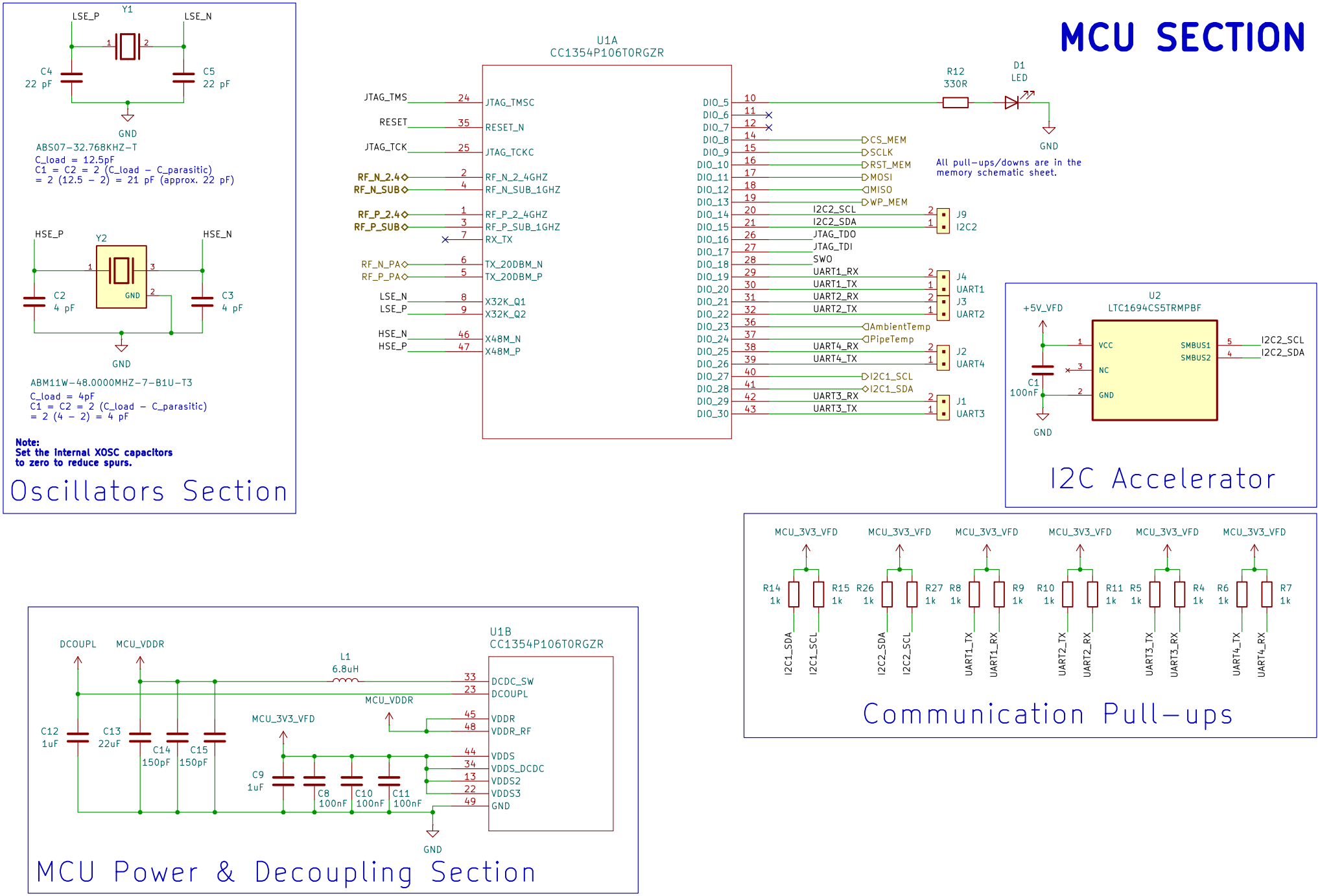
Y1
LSE_P
LSE_N
C4
22 pF
C5
22 pF
GND
ABS07-32.768KHZ-T
C_load = 12.5pF
C1 = C2 = 2 (C_load - C_parasitic)
= 2 (12.5 - 2) = 21 pF (approx. 22 pF)
HSE_P
Y2
HSE_N
C2
4 pF
C3
4 pF
GND
ABM11W-48.0000MHZ-7-B1U-T3
C_load = 4pF
C1 = C2 = 2 (C_load - C_parasitic)
= 2 (4 - 2) = 4 pF
Note:
Set the internal XOSC capacitors
to zero to reduce spurs.
Oscillators Section
U1A
CC1354P106T0RGZR
JTAG_TMS
RESET
JTAG_TCK
RF_N_2.4
RF_N_SUB
RF_P_2.4
RF_P_SUB
RF_N_PA
RF_P_PA
LSE_N
LSE_P
HSE_N
HSE_P
JTAG_TMSC
RESET_N
JTAG_TCKC
RF_N_2_4GHZ
RF_N_SUB_1GHZ
RF_P_2_4GHZ
RF_P_SUB_1GHZ
RX_TX
TX_20DBM_N
TX_20DBM_P
X32K_Q1
X32K_Q2
X48M_N
X48M_P
DIO_5
DIO_6
DIO_7
DIO_8
DIO_9
DIO_10
DIO_11
DIO_12
DIO_13
DIO_14
DIO_15
DIO_16
DIO_17
DIO_18
DIO_19
DIO_20
DIO_21
DIO_22
DIO_23
DIO_24
DIO_25
DIO_26
DIO_27
DIO_28
DIO_29
DIO_30
R12
330R
D1
LED
GND
CS_MEM
SCLK
RST_MEM
MOSI
MISO
WP_MEM
All pull-ups/downs are in the
memory schematic sheet.
I2C2_SCL
I2C2_SDA
J9
I2C2
JTAG_TDO
JTAG_TDI
SWO
UART1_RX
UART1_TX
UART2_RX
UART2_TX
J4
UART1
J3
UART2
AmbientTemp
PipeTemp
UART4_RX
UART4_TX
J2
UART4
I2C1_SCL
I2C1_SDA
UART3_RX
UART3_TX
J1
UART3
U2
LTC1694CS5TRMPBF
+5V_VFD
VCC
NC
GND
SMBUS1
SMBUS2
C1
100nF
I2C2_SCL
I2C2_SDA
GND
I2C Accelerator
MCU_3V3_VFD
R14
1k
R15
1k
R26
1k
R27
1k
R8
1k
R9
1k
R10
1k
R11
1k
R5
1k
R4
1k
R6
1k
R7
1k
I2C1_SDA
I2C1_SCL
I2C2_SDA
I2C2_SCL
UART1_TX
UART1_RX
UART2_TX
UART2_RX
UART3_TX
UART3_RX
UART4_TX
UART4_RX
Communication Pull-ups
DCOUPL
MCU_VDDR
L1
6.8uH
U1B
CC1354P106T0RGZR
DCDC_SW
DCOUPL
VDDR
VDDR_RF
VDDS
VDDS_DCDC
VDDS2
VDDS3
GND
MCU_3V3_VFD
C12
1uF
C13
22uF
C14
150pF
C15
150pF
C9
1uF
C8
100nF
C10
100nF
C11
100nF
GND
MCU Power & Decoupling Section

RF SECTION

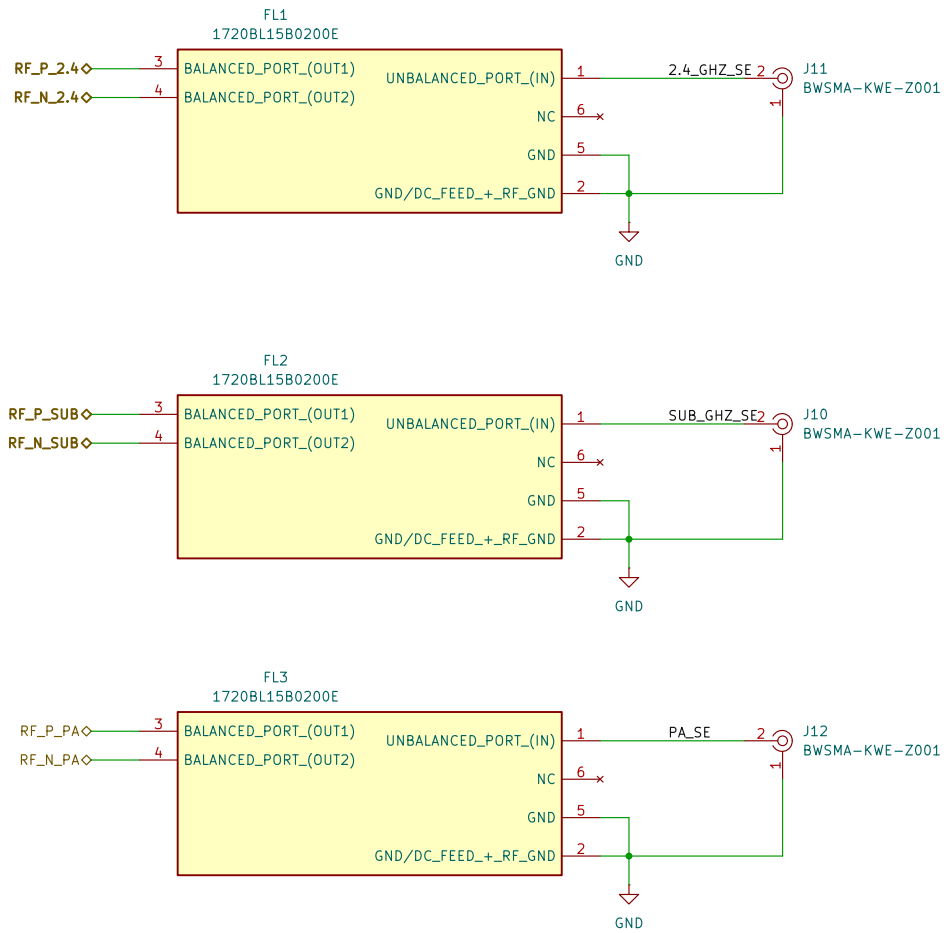
FL1
1720BL15B0200E
RF_P_2.4
RF_N_2.4
BALANCED_PORT_(OUT1)
BALANCED_PORT_(OUT2)
UNBALANCED_PORT_(IN)
NC
GND
GND/DC_FEED_+_RF_GND
2.4_GHZ_SE
J11
BWSMA-KWE-Z001
GND
FL2
1720BL15B0200E
RF_P_SUB
RF_N_SUB
BALANCED_PORT_(OUT1)
BALANCED_PORT_(OUT2)
UNBALANCED_PORT_(IN)
NC
GND
GND/DC_FEED_+_RF_GND
SUB_GHZ_SE
J10
BWSMA-KWE-Z001
GND
FL3
1720BL15B0200E
RF_P_PA
RF_N_PA
BALANCED_PORT_(OUT1)
BALANCED_PORT_(OUT2)
UNBALANCED_PORT_(IN)
NC
GND
GND/DC_FEED_+_RF_GND
PA_SE
J12
BWSMA-KWE-Z001
GND

MEMORY SECTION

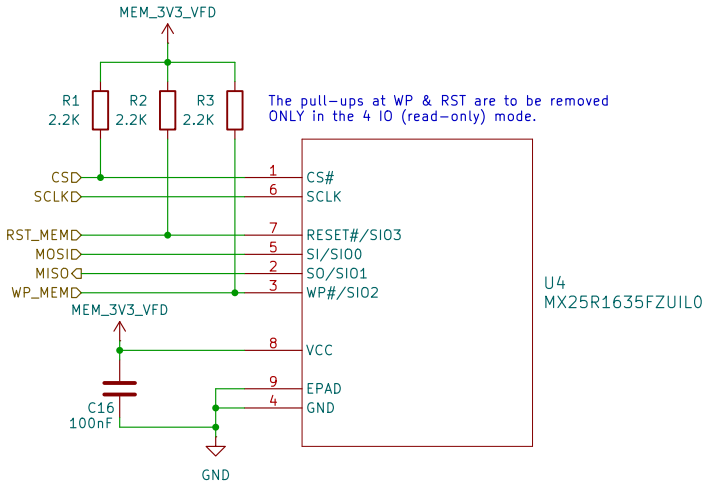

POWER SECTION

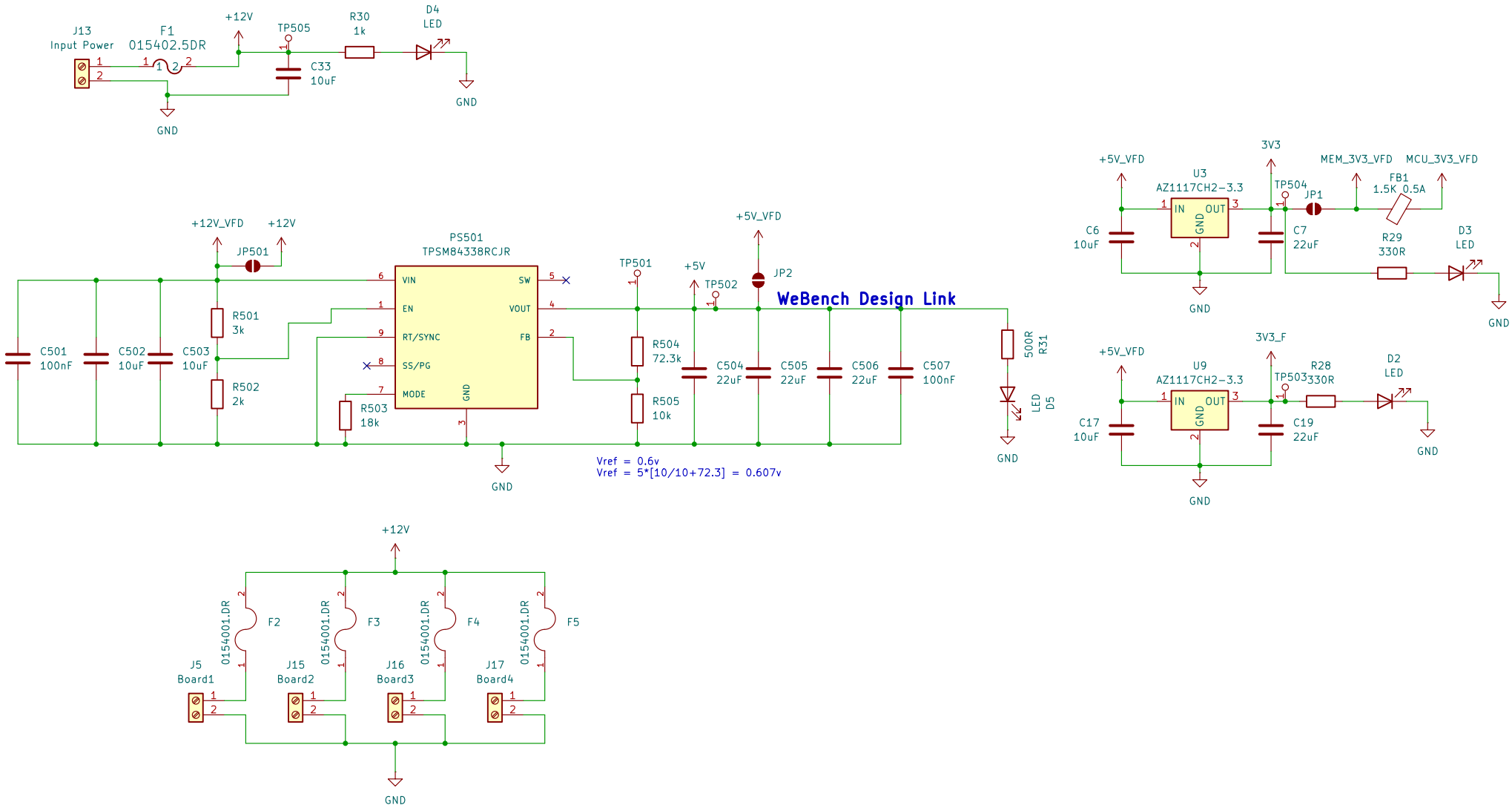

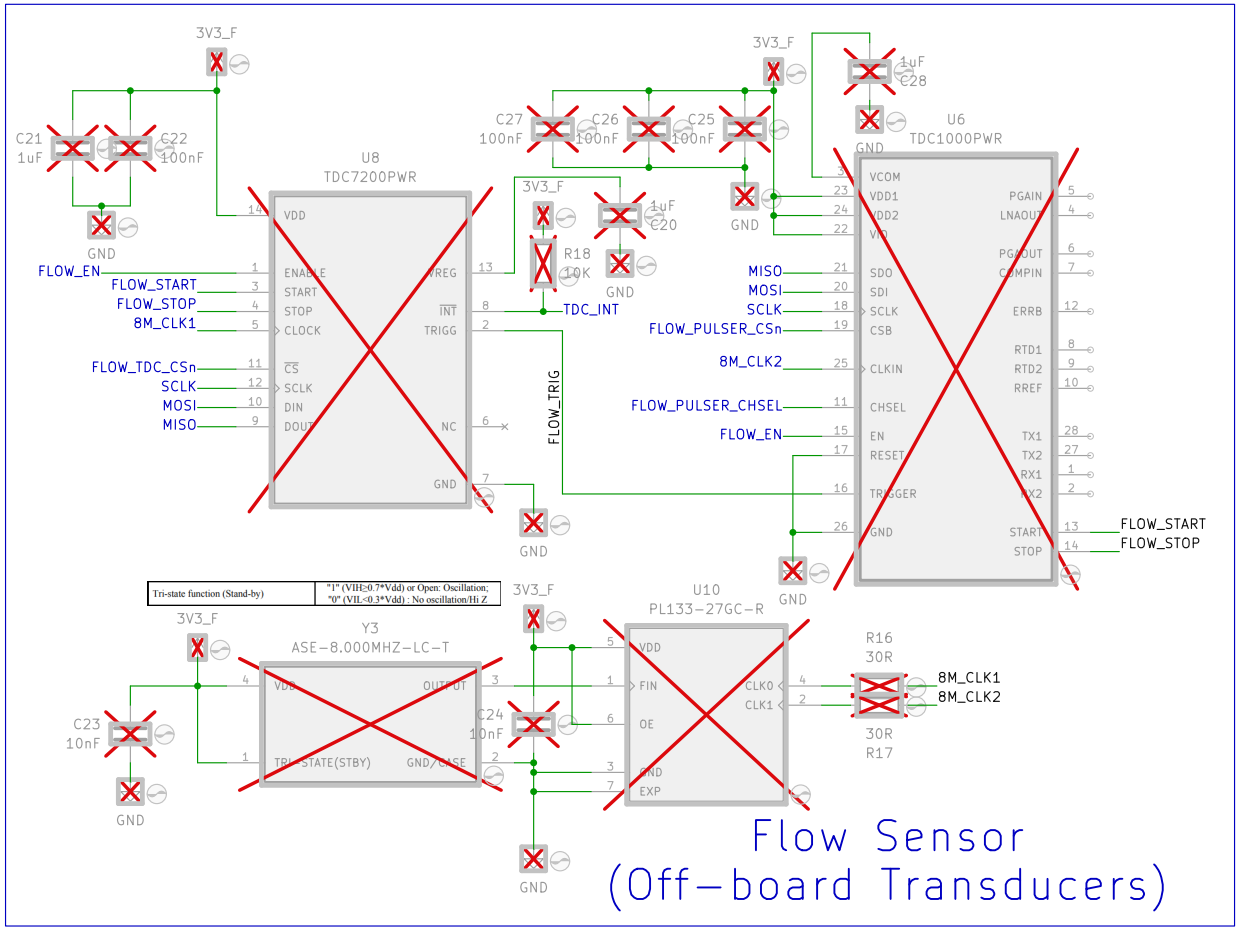

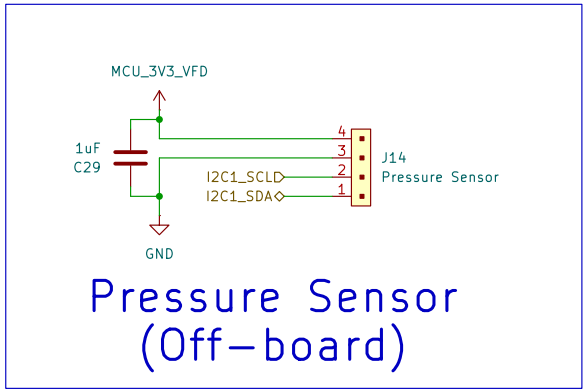

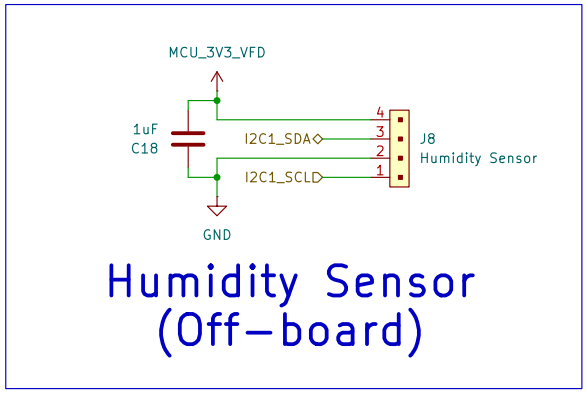

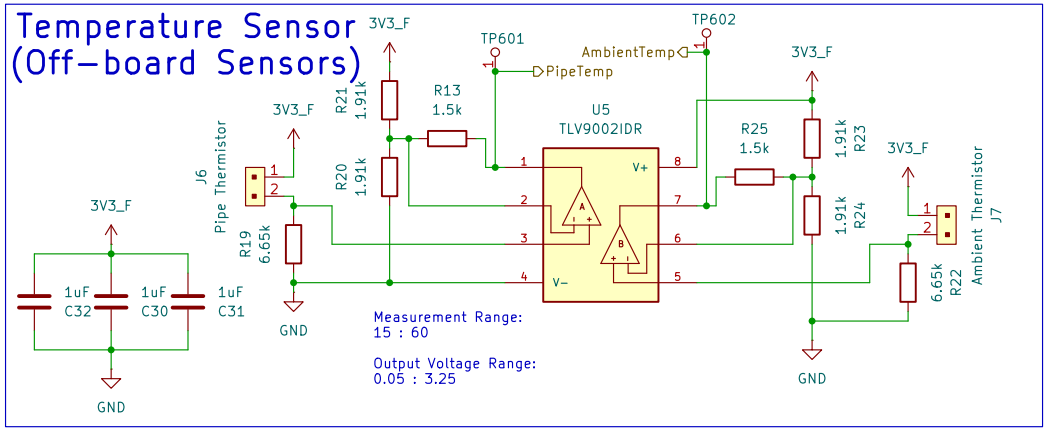

SENSORS SECTION