IDSurvey
Testing · Inspection · Certification

bki

Rules for Classification and Construction

Part 1 Seagoing Ships

RULES FOR CLASSIFICATION AND SURVEYS

Volume I

July 2025 Edition

Biro Klasifikasi Indonesia

www.bki.co.id

Rules for Classification and Construction

Part 1 Seagoing Ships

RULES FOR CLASSIFICATION AND SURVEYS

Volume I

July 2025 Edition

Copyright © 2025 Biro Klasifikasi Indonesia
Jl. Yos Sudarso No. 38-40, Tanjung Priok
Jakarta 14320 - Indonesia
rules@bki.co.id
www.bki.co.id

Amendments to the preceding Edition are marked by red colour and expanded text.

However, if the changes involves the whole section or sub section normally only the title will be in red colour.

Reproduction in whole or in part by any means of these Guidance, is subject to the permission in writing by Biro Klasifikasi Indonesia Head Office.

Foreword

This Rules for Classification and Surveys (Pt.1, Vol.I) July 2025 Edition replaces the Rules for Classification and Surveys (Pt.1, Vol.I) January 2025 edition. In this edition, new amendments are introduced which are mainly derived from IACS publications, and inputs from BKI Branch Offices and Technical Division BKI Head Office

The summary of previous edition and amendments including the implementation date are indicated in Table below:

No.	Edition/ Rule Change Notice (RCN)	Effective Date	Link
1	January 2025 Edition	1st January 2025	🔗
2	July 2024 Edition	1st July 2024	🔗
3	Consolidated Edition 2024	-	🔗
4	RCN No.3, October 2023	1st January 2024	🔗
5	RCN No.2, April 2023	1st July 2023	🔗
6	RCN No.1, October 2022	1st January 2023	🔗
7	Consolidated Edition 2022	-	🔗
8	RCN No.2, November 2021	1st January 2022	🔗
9	Corr No.1, August 2021	1st August 2021	🔗
10	RCN No.1, May 2021	1st July 2021	🔗
11	Consolidated Edition 2021	-	🔗
12	RCN No.2,December 2020	1st January 2021	🔗
13	RCN No.1, July 2020	1st August 2020	🔗
14	Edition 2019	1st July 2019	🔗
15	RCN No.1, October 2018	1st January 2019	🔗
16	Edition 2018	1st April 2018	🔗

A summary of amendments to the previous edition, including the implementation date for each section, is presented in **Table 1 - Amendments incorporated in This Notice**.

This rules is available to be downloaded at www.bki.co.id. Once downloaded, this Rules will be uncontrolled copy. Please check the latest version on the website.

Further queries or comments concerning this Rules are welcomed through communication to BKI Head Office.

This page intentionally left blank

Rules Amendment Notice

Table 1 - Amendments incorporated in This Notice

These amendments will come into force on 1st July 2025, except stated otherwise as indicated in the Table

Paragraph	Title/Subject	Status/Remark
Section 1 – General Term and Conditions		
A.	General	
A.6.	-	A new definition regarding the term 'client' has been added
F.	**Payment of Invoices**	Added a new requirement to align with the financial procedure
Section 2 – General Requirements		
C.	**Classification of New building ships**	
C.1.4	-	Changed the reference to Guidance for Marine Industry (Pt.1, Vol.AC) Sec.2.C, 1.4
D.	**Classification of Ships after construction (ship in service)**	
D.1.	**General**	
D.1.1	**Application**	
D.1.1.1)	-	Added new reference for verification compliance according to Section 5 of Annex 1 to the QSCS base on IACS PR 1A Rev.11 and PR 42 Rev.1
		The amendments are effective from 1 January 2026
Section 3 – Surveys – General Requirements		
A.	**General Information**	
A.9.	**Remote Classification Surveys**	
A.9.2.2		Added new requirement about remote survey is allowed if the surveyor cannot attend, subject to approval and technical requirements from BKI Head Office.
B.	**Surveys for Maintenance of Class**	
B.1.	**Periodical surveys**	
B.1.1	**Annual Surveys**	
B.1.1.2	**Scope**	
B.1.1.2.2)	Machinery and Electrical items:	Added new requirment base on IACS UR Z1 Rev.10 because there is change reference from A.1156(32) to A.1186(33)
Table 3.1	**Minimum Requirements for Thickness Measurements at Class Renewal Survey**	Superseded the requirement due to a typo.
Table 3.3	**Minimum Requirements for Internal Examination at Hull Class Renewal Surveys of Fuel Oil, Lube Oil and Fresh Water Tanks**	Superseded the requirement due to a typo.

Paragraph	Title/Subject	Status/Remark
Table 3.4	**Survey Requirements for Automatic Pipe Heads at Class Renewal Surveys**	Superseded the requirement due to a typo.
Annex B – Annexes to Section 4-I		
B.12	**ESP Survey Reporting Principles**	
Report 1	**Extract of Thickness Measurements (CSR SHIPS)**	Re-input the requirement for Extract of Thickness Measurements (CSR SHIPS) as it is not included in the Rules for Bulk Carriers and Oil Tankers (Pt.1, Vol.XVII).
Report 2	**Extract of Thickness Measurements (CSR SHIPS)**	Re-input the requirement for Extract of Thickness Measurements (CSR SHIPS) as it is not included in the Rules for Bulk Carriers and Oil Tankers (Pt.1, Vol.XVII).

Table of Contents

Foreword iii

Rules Amendment Notice v

Table of Contents vii

Section 1 General Term and Conditions **1-1**
A. General 1-1
B. Reservation Clause 1-1
C. Scope and Performance 1-2
D. Confidentiality 1-2
E. Fees 1-2
F. Payment of Invoices 1-3
G. Liability and Jurisdiction 1-3
H. Disagreement 1-3
I. Anti-Bribery and Compliance 1-3

Section 2 Classification **2-1**
A. General 2-1
B. Validity of Class 2-6
C. Classification of New building ships 2-14
D. Classification of Ships after construction (ship in service) 2-16

Section 3 Surveys – General Requirements **3-1**
A. General Information 3-1
B. Surveys for Maintenance of Class 3-7
C. Periodic Survey of Fuel Installations on Ships other than Liquefied Gas Carriers utilizing gas or other low flash point fuels 3-56
D. Thickness Measurement 3-60

Section 4 Surveys **4-1**
I. Additional Requirements for Ships with ESP Notation 4-1
A. General 4-1
B. Oil Tankers 4-11
C. Double Hull Oil Tankers 4-17
D. Chemical Tankers 4-25
E. Bulk Carriers 4-35
F. Double skin Bulk Carriers 4-50
II. Additional Requirements for Ships Not Subject to ESP Notation 4-62
A. Liquefied Gas Carrier 4-62
B. General Dry Cargo Ships 4-71
C. Shell Doors, Stern Doors, Inner Doors and Bow Doors of Ro-Ro Ships 4-82
D. Livestock Carrier 4-86

Section 5 Retrospective Requirements for Existing Ships . . . 5-1
A. General requirements . . . 5-1
B. Construction – structure, subdivision and stability, machinery and electrical installations . . . 5-1
C. Construction –Fire protection, fire detection and fire extinction . . . 5-3
D. Additional safety measures for bulk carriers . . . 5-5
E. Strength and securing of small hatches on the exposed fore deck and air pipes, ventilator pipes and their closing devices thereover . . . 5-9
F. Loading instruments . . . 5-10
G. Requirements for the fitting of side shell doors, stern doors, bow doors and inner doors of ro-ro passenger ships . . . 5-10
H. Watertightness of chain lockers . . . 5-12
I. Ice class draught mark of ships intended for navigation in ice . . . 5-12
J. Requirements for electrical distribution system including harmonic filters . . . 5-12

Annex A Annexes to Section 1-3 . . . A-1
A.1 Procedures for Confined Space Safe Entry . . . A-1
A. General . . . A-1
B. Definitions . . . A-2
C. Requirements . . . A-4
A.2 Hull Survey for New Construction . . . A-7
A. Scope . . . A-7
B. Definitions . . . A-7
C. Applications . . . A-8
D. Qualification and monitoring of personnel . . . A-8
E. Survey of the hull structure . . . A-8
F. Review of the construction facility . . . A-9
G. New building survey planning . . . A-9
H. Examination and test plan for newbuilding activities . . . A-11
I. Proof of the consistency of surveys . . . A-11
J. Ship Construction File . . . A-11
K. Requirements for Tankers and Bulk Carriers subject to SOLAS Chapter II-1 Part A-1 Regulation 3-10 (Goal-based ship construction standards for bulk carriers and oil tankers) . . . A-12
A.3 The Wastage Allowance . . . A-34
A.4 Class Requirements of Laid-Up Ships . . . A-36
A. General . . . A-36
B. Safety conditions . . . A-36
C. Preservation measures for lay-up and maintenance . . . A-37
A.5 Survey of Watertight Cable Transits . . . A-43
A. General . . . A-43
B. Cable Transit Seal Systems Register . . . A-43
C. Installation and Maintenance of Watertight Cable Transits . . . A-44
A.6 Testing Procedures of Watertight Compartments . . . A-45
A. General . . . A-45
B. SOLAS Ships (Ships Built in Compliance with SOLAS 1974 as Amended) . . . A-45
C. SOLAS Exempt/ Equivalent Ships . . . A-54
D. Non-SOLAS Ships . . . A-55
A.7 Definitions . . . A-57
A.8 List of Contact Points for Changing Classification Status . . . A-66

Annex B Annexes to Section 4-I . . . B-1
B.1 Owner's Inspection Report . . . B-2

B.2 Example of Survey Programme . . . B-2
B.3 Survey Planning Questionnaire . . . B-6
B.4 Technical Assessment in Conjunction with the Planning of Enhanced Surveys for Class Renewal Survey Hull . . . B-9
B.5 Requirements for Extent of Thickness Measurement at Areas of Substantial Corrosion . . . B-16
B.6 Guidelines for the Gauging of the Vertically Corrugated Transverse Watertight Bulkhead Between Holds No. 1 and 2 . . . B-26
B.7 Guidelines for the Thickness Measurements of Side Shell Frames and Brackets in Single-Side Skin Bulk Carriers Required to Comply with URS 31 . . . B-29
B.8 Additional Annual Survey Requirements for the Foremost Cargo Hold of Ships Subject to Regulation XII/9 of the Convention . . . B-32
B.9 Strength of Cargo Hatch Cover Securing Arrangements for Bulk Carriers . . . B-33
B.10 Criteria for Longitudinal Strength of Hull Girder for Oil Tankers . . . B-33
A. General . . . B-33
B. Evaluation of longitudinal strength . . . B-33
C. Sampling method of thickness measurements for longitudinal strength evaluation and repair methods . . . B-34
B.11 Renewal Criteria for Side Shell Frames and Brackets in Single Side Skin Bulk Carriers and Single Side Skin OBO Carriers not Built in accordance with UR S12 Rev.1 or subsequent revisions (UR S31) . . . B-35
B.12 ESP Survey Reporting Principles . . . B-46
B.13 Recommended Procedures for Thickness Measurements . . . B-65
A. Recommended Procedures for Thickness Measurements of Ships . . . B-65
B. Recommended Procedures for Thickness Measurements of Ships Built According to The Net Scantling Approach . . . B-75
C. Recommended Procedures for Thickness Measurements of Bulk Carriers . . . B-102
D. Recommended Procedures for Thickness Measurements of Double Hull Oil Tankers B-120
E. Recommended Procedures for Thickness Measurements of Double Skin Bulk Carriers B-136

This page intentionally left blank

Section 1 General Term and Conditions

A. General 1-1
B. Reservation Clause 1-1
C. Scope and Performance 1-2
D. Confidentiality 1-2
E. Fees 1-2
F. Payment of Invoices 1-3
G. Liability and Jurisdiction 1-3
H. Disagreement 1-3
I. Anti-Bribery and Compliance 1-3

A. General

1. Biro Klasifikasi Indonesia (hereinafter referred to as ”BKI”) was established in 1964, under the enactment of Government Regulation of the Republic of Indonesia number 28/1964, as a State-owned Company for the purpose of providing amongst other things a faithful and accurate classification of ships classed with it, to approve designs of, to survey and to issue reports on ships, as well as technical certification services, all within the scope of classification described in the Rules.

2. In delivering its services, BKI acts and assures its independency, impartiality and objectivity.

3. The rights of interpretation of BKI Technical Rules rest with BKI alone.

4. The respective latest version of the General Terms and Conditions are applicable to all services rendered by BKI, including those rendered within the scope of their statutory functions, even if no separate agreement has from case to case been reached regarding their applicability. Where contractual relations are established between BKI and any persons other than the client, the relevant Technical Rules and the provisions of G.1 to G.6. Below shall also apply to such third parties.

5. BKI also provides technical analyses services.

6. A client is an entity, typically the owner or prospective owner, who engages BKI (Biro Klasifikasi Indonesia) for classification, survey, and related services.

B. Reservation Clause

1. No confirmation or certification (certificates) with regard to compliance of technical facts or products with the technical Rules issued by BKI shall be given or issued by anybody other than BKI.

Without relevant Certificates being issued by BKI, no statements shall be made to the effect that the product in question was manufactured in accordance with the Rules of BKI.

2. A confirmation given or certificate issued shall not release the client from his contractual obligations towards third parties.

3. Certificates are issued by BKI subject to withdrawal at any time. The right of withdrawal may, for instance, be exercised in the event of adaptations to the technical Rules or of the client failing to comply in due time with conditions or instructions issued by BKI.

C. Scope and Performance

1. The kind and scope of services rendered by BKI are based on the relevant agreements concluded and always, in the absence of an express special agreement, on the Rules for Classification and Surveys applicable at the time of Class inspections and/or surveys and, with respect to the review of construction documents, on the Construction Rules applicable at the time the contract was made between the shipyard and the ordering party of the vessel.

Safety relevant changes to the Construction Rules made after the date of "contract for construction" shall be taken into consideration.

With respect to flag state inspections the relevant regulations shall apply. The classification of a ship with BKI does not exempt the owners from compliance with any additional and/or more stringent requirements issued by the Administration of the state whose flag the ship is entitled to fly and provision for their application.

2. It is the client's obligation to ensure that the services of BKI can be rendered smoothly and without delay. Therefore, all such preparations as required to conduct the survey and audit are to be made by the client in accordance with the requirement of the Rules. BKI shall, to the extent requested scope, be granted unrestricted access and the right of survey and audit.

Any information, drawings, etc. required for performance of the functions and activities of BKI shall be made available in due time.

3. Before BKI personnel starts to work, the client shall inform BKI about relevant safety issues and be responsible to take all necessary safety related measures to ensure a safe work environment for the persons carrying out the work for BKI and shall comply with all legal and other safety regulations.

In case of enclosed space, safe entry shall be according to Annex A.1 (Procedural for Confined Space Safe Entry)

4. When BKI personnel on duty deems, there is a lack of preparation, unsafe working environment or non-fulfilment to the applicable legal and safety regulations according to C.2 and C.3, BKI personnel may decline to work until such conditions are inexistence.

Related to the provision of E., clients shall be accounted for delays took place resulting from cases of the above.

5. The client acknowledges and consents to the fact that BKI may delegate work related to this contract to partner of the BKI. BKI is responsible for delegated work in accordance with the provisions of this contract.

6. BKI is only responsible for services it has delivered directly.

D. Confidentiality

BKI will treat as confidential any documentation and information received in connection with orders placed with BKI. Such documentation and information may be passed on to third parties solely with prior written consent of the party entitled thereto. See Section 2, A.1.7.

The above is without prejudice to any obligations towards the authorities of the State of the Flag.

E. Fees

For services rendered by BKI fees are to be paid in accordance with the BKI's Tariffs of Fees, even if no classification is granted. In addition to these fees, BKI will charge for any expenses incurred in connection with the services rendered (e.g. travelling or other expenses and, where applicable, any value added/turnover tax).

F. Payment of Invoices

The fees for all services rendered by BKI are due for payment without deduction not later than 1 month calendar days after the date of received Invoice. By default, BKI entitled to withhold the next survey, Certificates and other documents unless there is a specific agreement between BKI and its customers.

G. Liability and Jurisdiction

1. BKI's omission or failure to carry out or observe any stipulation, condition or obligation to be performed to the contract will not give rise to any claim against BKI or be deemed to breach the contract if the omission or failures arises from caused beyond BKI reasonable control.

2. BKI will be liable for loss or damage, if it proved that the loss resulted directly from an act or omission of the BKI done. The liability of BKI shall be limited in its amount up to maximum of the fee for that particular service.

3. Rights to Claims of the client for defects as to quality shall become time barred 3 (three) months after acceptance by the client of the performance by BKI of its obligations.

4. Any disputes arising from the interpretation and implementation of the contract shall be settled so far as possible by negotiation with deliberation.

5. The place of performance for all obligations resulting from or in connection with the respective order from the client is in Pengadilan Negeri Jakarta Utara and the governing law is Indonesian Law.

6. The exclusive place of jurisdiction for claims against BKI is in Pengadilan Negeri Jakarta Utara. BKI is entitled to sue the client before the courts in Pengadilan Negeri Jakarta Utara.

H. Disagreement

1. In the event that individual provisions of the contract between BKI and the client or these General Terms and Conditions are or become partly or as a whole ineffective, this will not affect the effectiveness of the remaining terms.

2. In the event of doubts as to the interpretation of the present General Terms and Conditions, the English text shall be authoritative.

I. Anti-Bribery and Compliance

1. The Surveyors of BKI are not permitted to receive any fee, gratuity or reward whatsoever, for their own use or benefit, for any services performed by them in their capacity as Surveyors to BKI.

2. The parties shall conduct their respective business activities in a fair, ethical, and lawful manner in accordance with all applicable laws and generally accepted codes of conduct, and avoid any unacceptable activities.

3. Customer shall indemnify and hold harmless BKI from any breach of Clause 2. above.

This page intentionally left blank

Section 2 Classification

A. General 2-1
B. Validity of Class 2-6
C. Classification of New building ships 2-14
D. Classification of Ships after construction (ship in service) 2-16

A. General

1. Rules, Regulations and Guidelines

1.1 Underlying Technical Rules & Regulations

1.1.1 The Classification of ships, other floating units and any pertinent equipment is based on:

— unless stated otherwise in the specific sections, the respective latest edition of the Rules for Classification and Surveys (Pt.1, Vol.I),

— the Construction Rules, Regulations and Guidelines relating to the respective ship type or installation, as applicable on the date of conclusion of the contract between shipyard (manufacturer) and ship owners (client), see also C.1.

1.1.2 The Construction Rules cover (Part 1 of Vol. II, Vol. III, Vol. IV, Vol.V, and Vol. VI) Rules for Hull, Rules for Machinery Installations, Rules for Electrical Installations, Rules for Materials and Rules for Welding and any other special Rules published by BKI that may be applicable from case to case [1].

1.1.3 In case of bilingual editions, the English text shall be authoritative in the event of doubts as to the interpretation of the BKI Technical Rules and Regulations, except Section 1, General Terms and Conditions.

1.1.4 For ship navigating in Indonesian waters only, Peraturan Kapal Domestik (Bag.8, Vol.I) applies.

1.2 The following shall apply unless otherwise specified

1.2.1 The date of ”contract for construction” of a vessel is the date on which the contract to build the vessel is signed between the prospective ship owner and the shipyard. This date is normally to be declared to BKI by the ordering client applying for the assignment of Class to a newbuilding, see also C.1.

1.2.2 The date of ”contract for construction” of a series of sister vessels, including specified optional vessels for which the option is ultimately exercised, is the date on which the contract to build the series is signed between the prospective ship owner and the shipbuilder.

Vessels built under a single contract for construction are considered a “series of vessels” if they are built to the same approved plans for classification purposes. However, vessels within a series may have design alterations from the original design provided:

— such alterations do not affect matters related to classification, or

— If the alterations are subject to classification requirements, these alterations are to comply with the classification requirements in effect on the date on which the alterations are contracted between the prospective owner and the shipbuilder or, in the absence of the alteration contract, comply with the classification requirements in effect on the date on which the alterations are submitted to BKI for approval.

[1] For Classification and Construction of mobile and fixed offshore installations the Rules for Offshore Installations are applicable.

The optional vessels will be considered part of the same series of vessels if the option is exercised not later than 1 year after the contract to build the series was signed.

1.2.3 If a contract for construction is later amended to include additional vessels or additional options, the date of ”contract for construction” for such vessels is the date on which the amendment to the contract is signed between the prospective ship owner and the shipyard. The amendment to the contract is to be considered as a ”new contract” to which 1.2.1 and 1.2.2 apply.

If a contract for construction is amended to change the ship type, the date of “contract for construction” of this modified vessel, or vessels, is the date on which revised contract or new contract is signed between the Owner, or Owners, and the shipbuilder.

1.2.4 In any case, Section 1, C is to be observed.

1.2.5 The year, month and date at which the new construction survey process is completed shall be specified as the “Date of Build”. Where there is substantial delay between completion of construction survey process and the ship commencing active service, the date of commissioning may be also specified.

1.2.6 For ships underwent modification, after modifications are completed, the “Date of Build” shall remain assigned to the ship.

1.3 Statutory regulations

1.3.1 National Rules and Regulations as, for instance, adopted by the respective flag state will as a matter of principle not be affected by the Rules for Classification and Construction. However, various requirements stipulated by International Conventions are taken into account in the BKI Rules, see also Section 3, A.4.

The Guidance for Code and Convention Interpretations (Pt.1, Vol.Y) which is adopted from IACS Unified Interpretations is applicable to a vessel, its machinery and equipment, in accordance with the implementation dates and provisions stated in this guidance, when acting as a Recognized Organization, authorized by a flag State Administration to act on its behalf, unless provided with written instruction to apply a different interpretation by the flag Administration.

1.3.2 Disclaimer

Statutory requirements are continuously being processed and updated by the IMO and the entry into force date may not coincide with the annual release of BKI Rules. BKI makes an effort to keep BKI Rules up to date with mandatory requirements; however, BKI could not accept any liability for damages incurred in this context.

1.4 Responding to Port state control

1.4.1 When BKI’s classed ship is detained by Port State Control and the deficiencies are related to Statutory Certificates issued by Biro Klasifikasi Indonesia on behalf of a flag State, BKI is to be immediately notified by the owner or operator or other person responsible for the operation of the ship.

1.4.2 In case of deficiencies related to the Cargo Ship Safety Construction Certificate, however, it is also essential to notify BKI, regardless the flag state of the vessels.

1.4.3 When requested by Port State Control and upon concurrence by the owner/operator, BKI Surveyor would attend on board a ship in order to assist in the rectification of reported deficiencies or other discrepancies.

1.4.4 Reporting of Deficiencies relating to Possible Safety Management System Failures

.1 When deficiencies relating to possible safety management system failures are identified by the Surveyor during a periodical (Annual/Intermediate/Class Renewal) survey or occasional survey, Statutory Surveys and additional surveys relevant to Port State Control, a report is to be completed by the Surveyor and sent to BKI Head office. The report are covers the following aspects:

i) deficiencies relating to technical conditions which may lead to the limitation, suspension or withdrawal of a Class or Statutory Certificate;

ii) deficiencies relating to documentation;

iii) deficiencies relating to operational requirements;

iv) other deficiencies which may seriously affect the safety of ship, personnel or the environment.

.2 BKI' surveyor will inform the master or Company representative that information in the report may be communicated to the Organisation responsible for the issue of the SMC.

1.5 Effective Date of Rules Application

1.5.1 The effective date of entry into force of any amendments to the Rules and Guidelines is indicated on Rules and Guidelines Amendment Notice or in the relevant Section.

1.5.2 The application of the Technical Rules and Regulations for admission to newbuilding ships are based on the contract date for construction between the shipbuilder and the prospective Owner. The term date of "contract for construction" shall be construed as per 1.2.1 to 1.2.3.

1.5.3 The amendment of rule requirements is made applicable to periodical surveys of ship in operation when the date of rule amendments become effective.

1.5.4 In the case of major conversions or alterations of vessels shall in general comply with the rules applicable at the time of application is received by BKI.

1.5.5 Amendments to the rules may be made retroactive for certain ships in operation and under construction at a given date or an upcoming survey to comply with class or statutory requirements.

1.6 Classification Limitation

The Rules, surveys performed, reports, certificates and other documents issued by BKI are not meant as a substitute for duties, responsibilities and obligations of other parties such as Administrations, actual or prospective Owners or Operators, masters, and crew, Charterers, Brokers, Cargo-owners and Underwriters, naval architects, marine engineers, Designers, Shipbuilders, Manufacturers, Repairers, Suppliers, Contractors or Sub-contractors.

1.7 Transparency of classification and statutory information

1.7.1 The classification and statutory information which may be released to Ship-owners, Flag State, Port state, Insurance company and Shipyards as relevant and the conditions for their release are indicated in Table 2.1.

2. Scope

2.1 Classification covers the ship's hull and machinery, including electrical installations and anchoring equipment

2.2 On request, certain installations e. g. refrigerating installations may be classed separately, see 2.7.

2.3 BKI reserves the right to extend the scope of Classification to all equipment and machinery used in the operation of the ship, which by their Character and / or arrangement may impair the safety or arrangement may impair the safety of human life, of the ship and her cargo or of the environment.

2.4 Structural systems and equipment determining the ship type are subject to examination within the scope of Classification, if the ship type is specified in the form of a Notation affixed to the Character of Classification, see Guidance for Class Notation (Pt.0, Vol.B).

Table 2.1 Transparency of Classification and Information

No	Information in Question	Information available to:				
		Owners	Flag State	Port State	Insurance Company*	Ship Yards
1	**Class Societies Standing Documents:**					
	– Rules and Guidelines (Class and statutory requirements)	1	1	1	1	1
	– Instructions to Surveyors		1			
	– Quality Manual	1	1	1	1	1
	– Register Book	1	1	1	1	1
2	**Ship Related Information:**					
	A. New buildings					
	– Approved Drawings	6	1			7
	– Formal Approval Letters	1				7
	– Certificates of Important Equipment	2				7
	B. Ships in Operation					
	I. Class Services					
	– Date (month and year) of all Class Surveys	7	1	1	1	
	– Expiry Date of Class Certificate	7	7**	1	1	
	– Certificates/Reports	7	1	6	5	
	– Overdue Surveys	7	7**	1	1	
	– Text of Recommendations	7	1	1	5	
	– Text of Overdue Recommendations	7	1	1	1	
	– Executive Hull Summary	7	3	3	3	
	II. Statutory Services					
	– Due Dates of Statutory Surveys	7	7**	1	1	
	– Expiry Date of Statutory Certificates	7	7**	1	1	
	– Registered Statutory Rec.	7	7**	1	5***	
	– Overdue Statutory Rec.	7	7**	1	1***	
3	**Other Information:**					
	– Correspondence File with Yard and/or Owner	6	6		5 & 6	
	– Audit of Class Societies QA System	4	4	4	4	
	– Class Transfer Reporting	7	7	7	7	
	– Class Withdrawal Information	7	7	7	7	

* Insurance Company means P&I Clubs and Hull Underwriters.
** If stated in Agreement.
*** Unless prevented by the agreement with the flag State.
Key:

1. Available upon request.
2. At delivery of the ship by Shipyard.
3. Available under visit on board.
4. Result of audit available on request.
5. When accepted by Owners - or through special clause in insurance contract.
6. When accepted by Owner (Master) or Shipyard as applicable.
7. Automatically available.

2.5 Where used, the terms “at the discretion of the surveyor” and “as deemed necessary” means the surveyors will use their professional judgement based on objective evidence to decide the level of survey required.

2.6 The truth of documentation and information

2.6.1 The submitted documentation and information from clients, which forms the basis for classification shall, at all times, reflect the true status.

2.6.2 Classification-related documents and information are liable to be invalidated by BKI whenever their object is found to differ from that on which they were based or to be contrary to the applicable requirements.

2.6.3 BKI is not responsible for the consequences arising from any use of the above classification related documents and information

2.7 Refrigerating installations

2.7.1 For the purpose of the present Rules the following are considered to be refrigerating installations:

— cargo refrigerating installations for the refrigeration of insulated cargo holds,

— container refrigerating installations for the refrigeration of insulated containers.

Provided that the refrigerating installations are permanently installed and form an integral part of the ship.

The refrigerating installation includes the technical installations required for power supply.

2.7.2 Reefer units which can be connected to a container and transported in combination therewith, and containers with or without a reefer unit, are subject to Guidelines for Freight Containers (Pt.6, Vol.8).

3. Class Certificate

3.1 Assignment of Class, issuance of the Class Certificate, and assignment of the corresponding Character of Classification and Notations thereto are conditional upon proof being furnished of compliance with the Construction Rules in force on the date of placing of the order, see A.1.1.

3.2 BKI reserves the right to add special remarks in the Class Certificates, as well as information regarding operation of the ship which is of relevance for the vessel's class.

3.3 The Certificates of Classification are issued by BKI Head Office and they are to be kept on board ship.

3.4 Certificate of Class Maintenance

3.4.1 At the request of the Owner, a certificate confirming the maintenance of class may be issued by BKI based on information in its records for that ship at the time.

3.4.2 This certificate is issued on the assumption that the Owner has complied with the Rules, in particular with B.2.1-2.4 and Section 3, A.1.

3.4.3 According to the same conditions as above a certificate declaring that the class is maintained "clean and free from recommendation" may be issued by BKI when there is no pending recommendation at that date.

3.4.4 The Owner is liable for any damage which may be caused to any third party from improper use documents and information in case of 2.6.2 and 2.6.3.

4. Register

4.1 General

The Classification data of each ship classified will be included in the BKI data file. An extract of these ship data will be entered in the Register published by BKI. During the period of Class, BKI will update these details on the basis of relevant reports submitted by the Surveyors.

5. Appeal to Head Office

In case a client does not agree on a technical decision made by or on behalf of BKI, he may, as the case may be, send a written complaint to either Customer Relation Division (E-mail: cs@bki.co.id) or Survey Division (E-mail: svy@bki.co.id).

B. Validity of Class

1. Classification of ships

1.1 Class is assigned to a ship upon a survey held in order to verify whether it is eligible to be classed on the basis of BKI Rules (see A.1.1). This may be achieved through:

1) Classification of new building ships

2) Classification of ships after construction (ship in service)

   This requirement applies when an Owner applies to BKI for a ship already in service to be admitted to class. The application will be processed differently depending on whether the ship is:

   — classed with a QSCS Class Society, or
   — not classed with a QSCS Class Society, or
   — not classed at all.

1.2 The hull, the machinery and any special equipment classed have the same period of Class (duration of one Class period). The class continues to be valid, provided that the hull and the machinery are subjected to all surveys stipulated and that any repairs required are carried out to the satisfaction of BKI, see Section 3 and Section 4. For ship with Class Character **A100** the validity of the Class is not exceed 5 years.

2. Prerequisites for validity of Class

2.1 The Class assigned by BKI is valid only subject to the conditions stated in the Class Certificate (e.g. range of service, freeboard, main engine output). Class assignment is conditional upon the ship, including her machinery, being loaded and operated such as to comply with the design concept, and with the applicable Rules and Regulations.

This also applies to the distribution of cargo and ballast, if necessary to the securing of cargo, as well as to the operation of the ship in heavy weather.

2.2 If the hull and/or machinery are not subjected to the prescribed surveys on their due dates, vessel's class will be suspended for both hull and machinery

2.2.1 The Class Certificate will become invalid and the Class will be automatically suspended in any one of the following cases:

1) when Class Renewal Survey has not been completed or is not under attendance for completion prior to resuming trading, by the due date, or by the expiry date of any extension granted.

2) when the Annual Survey has not been completed within 3 (three) months of the due date of the Annual Survey, unless the vessel is under attendance for completion of the Annual Survey.

3) when the Intermediate Survey has not been completed within 3 (three) months of the due date of the third Annual Survey in each 5-year Class Renewal Survey cycle, unless the vessel is under attendance for completion of the Intermediate Survey.

2.2.2 The Class Certificate will become invalid and the Class may be suspended in accordance with BKI's suspension procedure, in any one of the following cases:

1) when the other survey required for maintenance of class (other than Annual, Intermediate and Class Renewal survey) is not carried out by the due date and no extension has been granted.

2) when the ship is operating beyond the service limitation defined by its Class Notation and other additional conditions as approved.

3) When any damage to the ship is to such an extent as affecting her Class and is not repaired in accordance with the BKI Rules, or when alterations or conversions affecting her class are carried out without the approval of BKI.

4) when outstanding conditions of class are not deleted by the due date and no extension has been granted.

5) when Continuous Survey items which are due or overdue at the time of Annual Surveys, are not carried out by the due date and no extension has been granted.

6) when survey fees are not paid.

2.2.3 BKI reserves the right to suspend the class for specific period as provided separately.

2.2.4 If the survey requirements related to maintenance of additional notation are not carried out as required, the suspension or withdrawal may be limited to those additional notation only.

2.3 BKI Head Office/Branch Office are to be immediately informed about any deficiencies or damages to hull and machinery, where these may be of relevance to the vessel's class. A survey will have to be arranged immediately after vessel's arrival at the next port. If the survey reveals that vessel's class has been affected, the vessel's class will be maintained only on condition that the repairs or modifications demanded by BKI will be carried out within the period specified by the Surveyor. Until full settlement of these conditions, Class will be restricted, see also 4.1.

2.4 When a vessel is dual classed and in the event, that the other Class Society involved takes action to suspend the class of the vessel for technical reasons, BKI will, upon receipt of this advice, also suspend the class of the vessel, unless it can otherwise document that such suspension is incorrect.

2.5 Apart from the Class Certificates any other documentation of significance for Classification is to be kept on board and made available to the Surveyor on request, such as:

— reports on surveys previously performed

— approved drawings and other documentation handed out to owners together with the Class Certificates and containing particulars or instructions of significance in respect of the Classification requirements (e.g. use of higher strength hull structural steel or lists of spare parts).

2.6 Reinstatement

Classification of ships will be reinstated if the cause of such suspension are removed, or upon verification that the overdue surveys and conditions of class has been satisfactorily dealt with. BKI will reinstate class of the ship for the following cases:

— Upon satisfactory completion of the overdue surveys. Such surveys will be credited as of the original due date. However, the vessel is to be dis-classed from the date of suspension until the date class is reinstated.

— Upon satisfactory completion of the overdue conditions of class. However, the vessel is removed from class from the date of suspension until a day before the date class is reinstated.

2.7 If a ship has to be surveyed in a port beyond the reach of the Surveyor or in the events of "force Majeure"[2)], the vessel is not in a port where the overdue surveys can be completed at the expiry of the periods allowed above, BKI may allow the vessel to sail, in class, directly to an agreed discharge port, and if necessary, hence, in ballast, to an agreed port at which the survey will be completed, provided:

1) examination of the ship's records is carried out by BKI;

[2)] Force majeure means damage to the ship; unforeseen inability of BKI to attend the vessel due to the governmental restrictions on right of access or movement of personnel; unforeseeable delays in port or inability to discharge cargo due to unusually lengthy periods of severe weather, strikes or civil strife; acts of war; or other force majeure.

2) BKI carries out the due and/or overdue surveys and examination of conditions of class at the first port of call when there is an unforeseen inability of BKI to attend the vessel in the present port, and

3) BKI is satisfied itself that the vessel is in condition to sail for one trip to a discharge port and subsequent ballast voyage to a repair facility if necessary. (Where there is unforeseen inability of BKI to attend the vessel in the present port, the master is to confirm that his ship is in condition to sail to the nearest port of call.)

The surveys to be carried out are to be based upon the survey requirements at the original due date and not on the age of the vessel when the survey is carried out. Such surveys are to be credited from the date originally due.

If class has already been automatically suspended in such cases, it may be reinstated subject to the conditions prescribed above.

2.8 Vessels laid-up in accordance with BKI's Rules prior to surveys becoming overdue need not be suspended when surveys addressed above become overdue.

However, vessels which are laid-up after being suspended as a result of surveys going overdue, remain suspended until the overdue surveys are completed.

2.9 When a vessel is intended for a demolition voyage with any periodical survey overdue, the vessel's class suspension may be held in abeyance and consideration may be given to allow the vessel to proceed on a single direct ballast voyage from the lay up or final discharge port to the demolition yard. In such cases a short-term Class Certificate with conditions for the voyage noted may be issued provided the attending surveyor finds the vessel in satisfactory condition to proceed for the intended voyage.

2.10 When a vessel is intended for a single voyage from laid-up position to a repair yard or another place of laid-up with any periodical survey overdue, the vessel's class suspension may be held in abeyance and consideration may be given to allow the vessel to proceed on a single direct ballast voyage from the site of lay up to a repair yard or another place of laid-up, upon agreement with the Flag Administration, provided BKI finds the vessel in satisfactory condition after surveys, the extent of which are to be based on surveys overdue and duration of lay-up. A short-term Class Certificate with conditions for the intended voyage may be issued. This is not applicable to vessels whose class was already suspended prior to being laid-up.

3. Repairs, conversions

3.1 Where parts are damaged or worn to such an extent that they no longer comply with the requirements of BKI, they are to be repaired or replaced.

3.1.1 Any damage in association with wastage over the allowable limits (including buckling, grooving, detachment or fracture), or extensive areas of wastage over the allowable limits, which affects or, in the opinion of the Surveyor, will affect the vessel's structural, watertight or weathertight integrity, is to be promptly and thoroughly repaired. Areas to be considered include:

— side shell frames, their end attachments and adjacent shell plating,

— deck structure and deck plating,

— bottom structure and bottom plating,

— watertight or oil-tight bulkheads,

— hatch covers or hatch coamings,

— weld connection between air pipes and deck plating,

— all air pipe heads installed on the exposed decks,

— ventilators, including closing devices.

For locations where adequate repair facilities are not available, consideration may be given to allow a vessel to proceed directly to a repair yard. This may require discharging of the cargo and/or temporary repairs for the intended voyage.

3.1.2 Additionally, when a survey results in the identification of structural defects or corrosion, either of which, in the opinion of the Surveyor, will impair the vessel's fitness for continued service, remedial measures are to be implemented before the ship continues in service.

3.1.3 Where the damage found on structure mentioned under 3.1.1 is isolated and of a localised nature which does not affect the ship's structural integrity, consideration may be given by the surveyor to allow an appropriate temporary repair to restore watertight or weather tight integrity and impose a Condition of Class, with a specific time limit.

3.2 Maintenance work, repairs and conversions of classed ships and special equipment have to be carried out under the supervision of BKI to ensure maintenance or reassignment of Class.

3.3 The areas affected by the repair and conversion are to be treated in the same way as new buildings, irrespective of whether the hull, the machinery including the electrical installation, the inert gas system, automated systems or other classed equipment are concerned, see also C.3.1.2.

3.4 If following major conversions, a new Character of Classification and/or new Notations are assigned so that new Certificates have to be issued, commencement of a new period of Class may be agreed about.

4. Withdrawal of Class

4.1 Where hull and machinery are found to no longer comply with the requirements on which Class assignment had been based, or where owners refuse to have repairs or modifications required by BKI carried out within a period to be determined from case to case, vessel's class will cease to be valid.

4.2 If owners are not interested in maintenance of, or readmission to Class of the vessel, BKI will have to be informed accordingly. The Class Certificates will have to be returned to BKI.

4.3 If for some reason the Class has expired or has been withdrawn or suspended by BKI, this will be indicated in the Register.

4.4 Where following withdrawal of vessel's class the repairs required by BKI have been carried out and the ship has been subjected to a survey for re-admission to Class, the original Class may be reassigned with a new period of Class. Such surveys are to be carried out in accordance with the requirements stipulated by BKI Head Office.

4.5 BKI will withdraw or cancel the Class of the ship in any one of the following cases:

— at the request of the Owner.

— when the vessel proceeds to sea without having completed conditions of class which were required to be dealt with before leaving the port.

— when Class has been suspended for a period of 6 (six) months due to overdue Annual, Intermediate, Special or other Surveys required for maintenance of Class or overdue outstanding conditions of class, Class is to be withdrawn. A longer suspension period may be granted when the vessel is not trading as in cases of lay-up, awaiting disposition in case of a casualty or attendance for reinstatement

— when the vessel is reported as a constructive total loss.

— when the vessel is reported scrapped.

4.6 Re-classification of Ships

4.6.1 When Owners request for reclassification of a ship for which the class previously assigned has been withdrawn, BKI will require a Re-classification Survey to be held by the Surveyors. The extent of the survey will depend upon the age of the ship and the circumstances of each case.

4.6.2 If the ship is found or placed in good and efficient condition in accordance with the requirements of the Rules and Regulations at the Re-classification Survey, BKI may decide to reinstate her original class or assign such other class as considered appropriate.

4.7 Withdrawing Class of other Class Society from a Double Class Arrangement

4.7.1 Whenever BKI being in a double class arrangement with another Society receives:

— a written request from an Owner pertaining to his intention to withdraw from class of the other Society, or

— information that her class has been withdrawn by the other Society

The Owner is to authorize BKI to request from withdrawing Society its current class status.

BKI will notify the Owner in writing that the validity of BKI's Class Certificate is subject:

1) For vessels less than 15 years of age, all overdue conditions of class of the withdrawing Society are to be completed by BKI at the first port of call at which surveys can be carried out and all outstanding conditions of class of the withdrawing Society are to be completed by the due date of the withdrawing Society.

2) For vessels of 15 years of age and over, all overdue conditions of class of the withdrawing Society are to be completed by the withdrawing Society and all outstanding conditions of class of the withdrawing Society are to be completed by the due date of the withdrawing Society.

4.7.2 BKI is to suspend the validity of its Class Certificate or other documents enabling the vessel to trade, if any overdue conditions of class previously issued against the subject vessel by the withdrawing Society have not been satisfactorily completed by the relevant Society, depending on the age of the vessel, at the first port of call where surveys can be carried out.

When facilities are not available in the first port of survey, a direct voyage to a port where facilities are available may be accepted to complete surveys for overdue conditions of class of the withdrawing Society.

4.7.3 The validity of the Certificate of Class is subject to any outstanding conditions of class previously issued against the vessel by the withdrawing Society being completed by the due date and as specified by the withdrawing Society. Any outstanding conditions of class with their due dates are to be clearly stated on the:

1) class survey record if available on board; and

2) survey status

4.7.4 Any additional information regarding conditions of class received from the withdrawing Society is to be dealt with in accordance with above 4.7.2 and 4.7.3 as applicable.

If this additional information is received any conditions of class which are overdue are to be dealt with at the first port of call at which surveys can be carried out by either BKI or relevant Society, depending on the age of the vessel. If this is not accomplished, the Class Certificate is to be suspended immediately unless the Owner agrees to proceed directly, without further trading, to a suitable port where any overdue conditions of class are to be dealt with for completion.

5. Laid-up ships

5.1 A ship put out of commission may be subject to specific requirements for maintenance of class, as specified below, provided that the Owner notifies BKI. If the Owner does not notify BKI of the laying-up of the ship or does not implement the lay-up maintenance program, the ship's class will be suspended and/or withdrawn when the due surveys are not carried out by their limit.

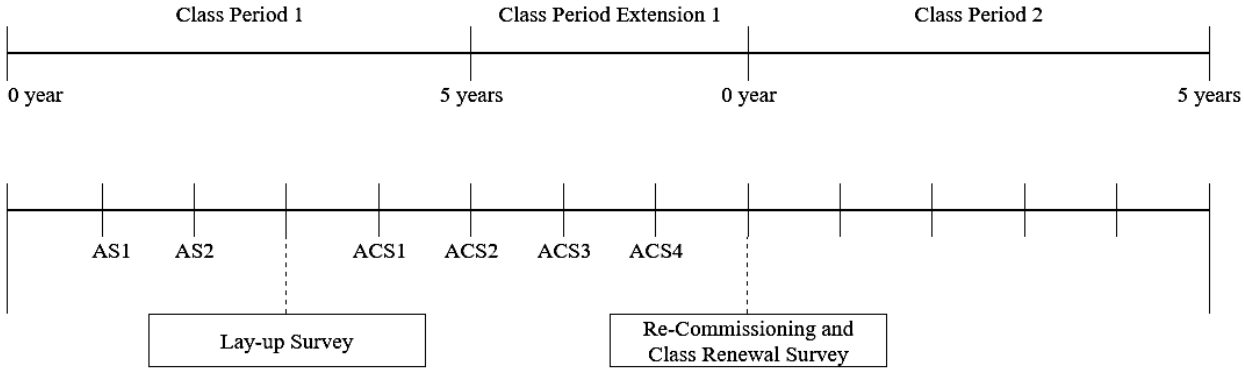

ACS: Annual condition survey (Annual Survey-Lay-up Condition)
AS: Annual survey (Normal Annual Survey)

Fig. 2.1 The scope of the laying-up survey and annual lay-up condition surveys

5.2 The lay-up maintenance program provides for a "laying- up survey" to be performed at the beginning of lay-up and subsequent "annual lay-up condition surveys" to be performed in lieu of the normal annual surveys which are no longer required to be carried out as long as the ship remains laid-up. The minimum content of the lay-up maintenance program as well as the scope of these surveys are given in Annex A.4. The other periodical surveys which become overdue during the lay-up period may be postponed until the re-commissioning of the ship.

5.3 Where the ship has an approved lay-up maintenance program and its period of class expires, the period of class is extended until it is recommissioned, subject to the satisfactory completion of the annual lay-up condition surveys.

5.4 The periodical surveys carried out during the lay-up period may be credited, either wholly or in part, at the discretion of BKI, having particular regard to their extent and dates. These surveys will be taken into account for the determination of the extent of surveys required for the re-commissioning of the ship and/or the expiry dates of the next periodical surveys of the same type.

5.5 When a ship is re-commissioned, the Owner is to notify BKI and make provisions for the ship to be submitted to the following surveys:

5.5.1 An occasional survey prior to re-commissioning, the scope of which depends on the duration of the lay-up period

5.5.2 All periodical surveys which have been postponed in accordance with 5.2, taking into account the provisions of 5.4.

5.6 In cases where the vessel has been laid up or has been out of service for a considerable period because of a major repair or modification and the owner elects to carry out only the overdue surveys, the next period of class will start from the expiry date of the class renewal survey. If the owner elects to carry out the next Class Renewal survey due, the period of class will start from the survey completion date.

5.7 Where the previous period of class expired before the re-commissioning and was extended as stated in 5.3, in addition to the provisions of 5.5 a complete class renewal survey is to be carried out prior to re-commissioning. Those items which have been surveyed in compliance with the class renewal survey requirements during the 15 months preceding the re-commissioning may be credited. A new period of class is assigned from the completion of this class renewal survey.

5.8 The scope of the laying-up survey and annual lay-up condition surveys are described in detail in Fig.2.1 below.

6. Laying-up survey

6.1.1 At the beginning of the lay-up period a laying-up survey is to be carried out whose scope is to verify that the safety conditions, preservation measures, lay-up site and mooring arrangements are in accordance with the program agreed by BKI.

6.1.2 Upon satisfactory completion of this survey, an endorsement to confirm that the ship has been placed in lay-up is entered on the Certificate of Classification, which is subsequently to be kept on board.

6.2 Annual lay-up condition survey

6.2.1 An annual lay-up condition survey is to be performed in lieu of the normal annual class surveys. The purpose of this survey is to ascertain that the lay-up maintenance program implemented is continuously complied with.

6.2.2 It is to be checked that the arrangements made for the lay-up are unchanged and that the maintenance work and tests are carried out in accordance with the maintenance manual and recorded in the lay-up log-book.

6.2.3 Upon satisfactory completion of the survey, the Certificate of Classification is endorsed.

6.3 Re-commissioning survey

6.3.1 Owners are to make the necessary arrangements to remove the temporary lay-up installations provided for preservation measures and the protective materials and coatings (oil, grease, inhibitors, desiccants), before the survey is commenced.

It is the Owners' responsibility to verify that the ship parts that are not covered by class are reactivated in satisfactory operational condition.

6.3.2 The scope of the re-commissioning survey is to include:

1) a general examination of the hull, deck fittings, safety systems, machinery installations (including boilers whose survey is not due) and steering gear.

2) all periodical surveys due at the date of re-commissioning or which became overdue during the lay-up period.

3) dealing with the condition of class due at the date of recommissioning or which became due during the lay-up period.

6.3.3 Detail item inspection in order to re-commissioning include:

For the hull the following is to be carried out:

— examination of shell plating above the waterline, deck plating, hatch covers and coamings

— examination of load line items

— overall survey of all cargo tanks/holds

— overall survey of representative ballast tanks when the lay-up period does not exceed two years

— overall survey of all ballast tanks when the lay-up period is two years and over

— overall survey of all ballast tanks when the lay-up period is two years and over

6.3.4 For the deck fittings the following is to be carried out:

— examination of fire extinguisher main pipe where possible, examination of deck piping under working pressure

— function tests of class items

— checking inert gas installation under working condition after inspection of water seal and function test of deck non-return valve and pressure/vacuum valves.

6.3.5 For machinery installations the following is to be checked:

— the analysis of lubricating oil of main engines, auxiliary engines, reduction gears, main thrust bearings and stern tube

— the general condition of crankcase, crankshaft, piston rods and connecting rods of diesel engines

— the crankshaft deflections of diesel engines. In addition, when engines have been laid-up for more than two years, one piston is to be disconnected and one liner is to be removed for examination. Dismantling is to be extended if deemed necessary

— the condition of blades of turbines through the inspection doors

— the condition of the water side of condensers and heat exchangers

— the condition of expansion arrangements

— the condition of reduction gears through the inspection doors

— the condition after overhauling of pressure relief devices

— the test of bilge level alarms, when fitted.

6.3.6 The main and emergency electrical installations are to be tested. The parallel shedding of main generators and main switchboard safety devices are to be checked. A megger test of the electrical installation is to be performed.

6.3.7 For the fire prevention, detection and fire-fighting systems, the following is to be examined and/or tested:

— remote control to quickly close FO valve, to stop FO pump and ventilation system, to close fire door and watertight door

— fire detectors and alarms.

— fire-fighting equipment

6.3.8 The automated installation is to be checked for proper operation.

6.3.9 When classed, the installations for refrigerated cargo are to be examined under working conditions. Where the lay-up period exceeds two years, representative components of the installation are to be dismantled.

6.3.10 For cargo installations on liquefied gas carriers, the following is to be carried out:

— inspection of the primary barrier in tanks

— for membrane tanks, a global gas test of tanks whose results are to be compared with those obtained at ship's delivery

— testing of gas piping at working pressure using inert gas.

BKI Surveyor is to attend the first cooling down and loading of the ship.

6.3.11 For other specific classed installations, the Owners are to submit a survey program to BKI.

6.3.12 On completion of the above surveys and tests, sea trials are to be performed in the presence of a Surveyor of BKI. The sea trials are to include:

— verification of the satisfactory performance of the deck installations, main propulsion system and essential auxiliaries, including a test of the safety devices

— an anchoring test

— complete tests of steering gear

— full head and full astern tests

— tests of automated machinery systems, where applicable

6.3.13 Upon satisfactory completion of the surveys, an endorsement to confirm the carrying out of all relevant surveys and the re-commissioning of the ship is entered on the Certificate of Classification.

C. Classification of New building ships

The hull survey for Classification of new building ships is to be in accordance with Annex A.2.

1. Application for Classification

1.1 The application for Classification is to be submitted to BKI by the Shipbuilder or the Owner. The application has to be given by the client, who on the basis of the building contract has the duty to observe the Rules of BKI.

1.2 Where application for the production of components are placed with subcontractors, BKI should be advised about it, also indicating the scope of production. The client will be responsible for observance of the BKI Rules by the subcontractors.

1.3 Where the application considers particulars already having been approved by BKI (for previous new buildings) to be used for the Classification, this will have to be specifically stated in the application. Amendments to the Construction Rules having been introduced meanwhile shall be taken into account, see A.1.1.

1.4 When the classification of new construction project with the design is already approved by an Initial Class, the requirements of Guidance for Marine Industry (Pt.1, Vol.AC) Sec.3 R-42 are to be complied with. The documentation in 4.1.1 are to be submitted by Shipyard to BKI for verification.

2. Examination of construction particulars

2.1 Particulars for examination (such as construction plans, proofs by computation, details on materials, etc.) are to be submitted electronically for examination in due time prior to commencement of construction as detailed in the Construction Rules.

The particulars to be submitted in Bahasa Indonesia or English have to contain all details required for examination in accordance with the Construction Rules. BKI reserves the right to request additional information and particulars to be submitted.

2.2 The particulars and drawings to be submitted, of components subject to approval, will be examined by BKI. Where applicable, they will be provided with a mark of approval and returned in one copy.

2.3 Any deviations from approved drawings require to be approved by BKI prior to being realized.

3. Supervision of construction and trials

3.1 General

3.1.1 BKI will assess the production facilities and procedures of the shipyard and other manufacturers as to whether they meet the requirements of the Construction Rules. In general, approvals based on such assessments are conditional for acceptance of products subject to testing.

3.1.2 Materials, components, appliances and installations subject to inspection are to comply with the relevant Rule requirements and be presented for inspection and/or construction supervision by BKI Surveyors, unless otherwise provided as a result of special approvals granted by BKI.

New installation of materials which contain asbestos, e.g. materials used for hull structure, machinery, electrical installations and equipment, is not permitted for all new and existing ships.

3.1.3 For each inspection, an appointment is to be arranged in time with the BKI Branch Office.

3.1.4 In order to enable the Surveyor to fulfil his duties, he is to be given free access to the ship and the workshop, where parts requiring approval are manufactured, assembled or tested. For performance of the tests required, the shipyard or manufacturers are to give the Surveyor assistance by providing the staff and equipment necessary for such tests.

3.2 Supervision of Construction

During the phase of construction of a vessel or installation, BKI will satisfy themselves by surveys and inspections that:

— parts for hull and machinery requiring approval have been constructed in compliance with the approved drawings and particulars

— all tests and trials stipulated by the Construction Rules are performed satisfactorily

— workmanship is in compliance with current engineering standards and/or Rule requirements

— welded parts are produced by qualified welders having undergone tests

— test certificates have been presented for components requiring approval (the Shipyard will have to ensure that any parts and materials requiring approval will only be delivered and installed, if the appropriate test certificates have been issued, see 4.1.

— where no individual certificates are required, type-tested appliances and equipment are employed in accordance with rule requirements

3.3 Tests at the manufacturers

As far as practicable, machinery and equipment will be subjected to operational trials on the manufacturers' test bed to the scope specified in the Construction Rules. This applies also to engines produced in large series. Where the machinery, equipment or electrical installations are novel in design or have not yet sufficiently proved their efficiency under actual service conditions on board ship, BKI may require performance of a trial under particularly severe conditions.

For refrigerating installations, see 3.5.

3.4 Shipboard trials

Upon completion of the ship and/or the system / equipment to be classed, all hull, machinery and electrical installations will be subjected to operational trials in the presence of the Surveyor, prior to and during the sea trial. This will comprise e. g.:

— tightness, operational and load tests of tanks, hatch covers, shell ports, ramps, etc.

— operational and/or load tests of the machinery and installations (propulsion plant, electrical installations, steering gear, anchor equipment, etc.) of importance for safe operation

During a final survey, checks will be made to ensure that any deficiencies found, for instance during the sea trial, have been eliminated

3.5 Refrigerating installations

3.5.1 Refrigerating machines are to be subjected to operational tests at the manufacturers.

3.5.2 Fitting of the refrigerating installation will be supervised by the Surveyor, who will examine the workmanship and perform the prescribed tightness and operational tests.

3.5.3 Upon completion the entire installation will be subjected to operational trials in accordance with the requirements of the Construction Rules.

3.5.4 For refrigerating installations deviating in design from installations in common use, BKI reserves the right to require additional tests to be performed.

4. Reports, certificates

4.1 Testing of materials, components, machinery, etc. at subcontractor's works will be certified by the Surveyor and/or the local BKI representation.

4.2 Upon completion of the ship or installation the Surveyors will prepare construction reports, on the basis of which BKI will issue the Class Certificate, see A.3.

5. Workmanship

5.1 General

5.1.1 Requirements to be complied with by the manufacturer

1) The manufacturing plant shall be provided with suitable equipment and facilities to enable proper handling of the materials, manufacturing processes, structural components, etc. BKI reserve the right to inspect the plant accordingly or to restrict the scope of manufacture to the potential available at the plant.

2) The manufacturing plant shall have at its disposal sufficiently qualified personnel. BKI is to be advised of the names and areas of responsibility of all supervisory and control personnel. BKI reserve the right to require proof of qualification.

5.1.2 Quality control

1) As far as required and expedient, the manufacturer's personnel have to examine all structural components both during manufacture and on completion, to ensure that they are complete, that the dimensions are correct and that workmanship is satisfactory and meets the standard of good shipbuilding practice.

2) Upon inspection and corrections by the manufacturing plant, the structural components are to be shown to the BKI Surveyor for inspection, in suitable sections, normally in unpainted condition and enabling proper access for inspection.

3) The Surveyor may reject components that have not been adequately checked by the plant and may demand their re-submission upon successful completion of such checks and corrections by the plant.

D. Classification of Ships after construction (ship in service)

1. General

1.1 Application

1.1.1 When an Owner applies to BKI for a ship already in service to be admitted to class, the application will be processed differently depending on whether the ship is:

1) classed with a classification society subject to verification of compliance with Section 5 of Annex 1 to the QSCS, and reported as compliant [3] by this classification society, or

Note:

Term of "this classification society" refer to losing Society in case of transfer of class or first class in case of addition to class.

2) non-compliant [4] ship, or

3) not classed at all.

For point 1) above, see requirements as given in 2. to 5. whichever is applicable. For point 2) and 3) above, see requirements as given in 6.

2. Transfer of ship in service classed by another classification society subject to verification of compliance with IACS QSCS and reported as compliant (IACS PR 1A)

2.1 Documentation to be submitted

2.1.1 The following particulars and/or drawings are to be submitted to BKI:

1) Main plans :

   A) General Arrangement
   B) Capacity Plan
   C) Hydrostatic Curves/Tables
   D) Loading Manual, where required
   E) Damage Stability calculation, where required

2) Steel plans:

   A) Midship Section
   B) Scantling Plan
   C) Decks
   D) Shell Expansion
   E) Transverse Bulkheads
   F) Rudder and Rudder Stock
   G) Hatch Covers
   H) For CSR vessels, plans showing, for each structural element, both as-built and renewal thicknesses and any thickness for "voluntary addition".

3) Machinery plans:

   A) Machinery Arrangement
   B) Intermediate, Thrust and Screw Shafts
   C) Propeller
   D) Main Engines, Propulsion Gears and Clutch Systems (or Manufacturer make, model and rating information)

[3] 'Compliant' ship means a ship classed with a Classification Society subject to verification of compliance with QSCS and in full compliance with all applicable and relevant IACS Resolutions.

[4] 'Non-compliant' ship means a ship either not classed with a Classification Society subject to verification of compliance with QSCS or not in full compliance with all applicable and relevant IACS Resolutions.

E) For Steam Turbine Vessels, Main Boilers, Superheaters and Economisers (or Manufacturer make, model and rating information) and Steam Piping

F) Bilge and Ballast Piping Diagram

G) Wiring Diagram

H) Steering Gear Systems Piping and Arrangements and Steering Gear Manufacturer make and model information

I) For vessels less than two (2) years old, torsional vibration calculations are to be submitted.

J) Additional plans required for unattended machinery space notation:

a) Instrument and Alarm List

b) Fire Alarm System

c) List of Automatic Safety Functions (e.g. slowdowns, shutdowns, etc.)

d) Function Testing Plan.

4) Additional requirements for vessels with ice class notation:

A) Plans for flexible couplings and/or torque limiting shafting devices in the propulsion line shafting (or manufacturer make, model and rating information) are to be submitted.

5) Additional plans required for oil tankers:

A) Pumping arrangement at the forward and after ends and drainage of cofferdams and pump rooms are to be submitted.

6) Additional plans required for Ro-Ro ship:

A) Operating and Maintenance Manual (OMM), if required

2.1.2 Alternative technical data may be accepted by BKI in lieu of specific items of the listed documentation not being available at the time of the transfer.

2.2 Class entry survey

2.2.1 For Admission to Class the extent of the Class entry survey for the hull and machinery installation will be specially determined by BKI depending on the vessel's age and type. If the result of the survey is satisfactory, the Class of BKI will be effective as of the date of performance of the concluded survey.

2.2.2 Class entry surveys may be, but are not required to be, credited as periodical surveys for maintenance of classification. Conditions of class due for compliance at a specified periodical survey for maintenance of classification need not be carried out/complied with at a Class entry survey unless the Class entry survey is credited as the specified periodical survey for maintenance of classification or the conditions of class is overdue.

2.2.3 Notwithstanding the records indicating that all surveys are up-to-date, a Class entry survey is to be held as minimum technical requirements by BKI, the extent of which is to be based on the age of the vessel and the losing Society's class status as follows:

A) Hull Classification Survey:

a) for vessels of age less than 5 years the survey is to take the form of an Annual Survey;

b) for vessels between 5 and 10 years of age the survey is to include an Annual Survey and inspection of a representative number of ballast spaces;

c) for vessels of 10 years of age and above but less than 20 years of age, the survey is to include an Annual Survey and inspection of a representative number of ballast spaces and cargo spaces. For gas carriers, in lieu of internal inspection of cargo spaces, the following applies except for :

i) Inspection of surrounding ballast tank(s) and void spaces including external inspection of independent cargo tank(s) and associated supporting systems as far as possible;

ii) Review of cargo log books and operational records to verify the correct functioning of the cargo containment system.

For chemical carriersoil tankers (including product carriers), and chemical tankers of 10 years of age and above but less than 15 years of age, in lieu of an internal inspection of cargo tanks without internal stiffening and framing, inspections of surrounding ballast tank(s) and void spaces and deck structure, are to be applied.

d) for vessels subject to ESP notation which are 15 years of age and above but less than 20 years of age, the survey is to have the scope of a Class Renewal Survey or an Intermediate Survey, whichever is due next;

e) for all vessels, which are 20 years of age and above, the survey is to have the scope of a Class Renewal Survey;

f) in the context of applying items d) and e) above, if a dry-docking of the vessel is not due at the time of transfer, consideration can be given to carrying out an underwater examination in lieu of dry-docking.

g) in the context of applying items d) and e), as applicable, the anchors and anchor chain cables ranging and gauging for vessels over 15 years of age is not required to be carried out as part of the Classification Survey unless the Classification Survey is being credited as a periodical survey for maintenance of class. If the classification survey is to be credited as a periodical survey for maintenance of class, consideration may be given by BKI to the acceptance of the anchors and anchor chain cables ranging and gauging carried out by the losing society provided they were carried out within the applicable survey window of the periodical survey in question.

h) in the context of applying items a) to f) above, as applicable,

i) if the class entry survey is to be credited as a periodical survey for maintenance of class consideration may be given by BKI to the acceptance of thickness measurements taken by the losing society provided they were carried out within the applicable survey window of the periodical survey in question.

ii) if the Classification Survey is not to be credited as a periodical survey for maintenance of class, consideration may be given by BKI to the acceptance of thickness measurements taken by the losing society provided they were carried out within 15 months prior to completion of classification survey when it is in the scope of a Class Renewal Survey, within 18 months prior to completion of class entry survey when it is in the scope of an Intermediate Survey.

In both cases, the thickness measurements are to be reviewed by BKI for compliance with the applicable survey requirements, and confirmatory gauging are to be taken to the satisfaction of BKI.

i) In the context of applying c) to f) above, as applicable, tank testing for vessels over 15 years of age is not required to be carried out as part of the Class entry survey unless the Class entry survey is being credited as a periodical survey for maintenance of class. If the classification survey is to be credited as a periodical survey for maintenance of class, consideration may be given by BKI to the acceptance of the tank testing carried out by the losing society provided they were carried out within the applicable survey window of the periodical survey in question.

j) In the context of applying a) to f) above, as applicable, compliance with IACS Unified Requirements that require compliance at the forthcoming due periodical surveys (such as S26 and S27) are not required to be carried out/completed as part of the Class entry survey unless the class entry survey is credited as a periodical survey for maintenance of class.

B) Machinery Class Entry Survey

A general examination of all essential machinery is to be held and is to include:

a) examination under working conditions of oil fuel burning equipment of boiler, economisers and steam/steam generators. The adjustment of safety valves of this equipment is to be verified by checking the records on the vessel;

b) all pressure vessels;

c) insulation resistance, generator circuit breakers, preference tripping relays and generator prime mover governors are to be tested and paralleling and load sharing to be proved (see Note 1);

d) in all cases, navigating lights and indicators are to be examined and their working and alternative sources of power verified;

e) bilge pumps, emergency fire pumps and remote control for oil valves, oil fuel pumps, lubricating oil pumps and forced draught fans are to be examined under working conditions;

f) recirculating and ice clearing arrangements, if any;

g) the main and all auxiliary machinery necessary for operation of the vessel at sea together with essential controls and steering gear is to be tested under working conditions. Alternative means of steering are to be tested. A short sea trial is to be held at the Surveyors discretion if the vessel has been laid up for a long period;

h) initial start arrangements are to be verified;

i) in the case of oil tankers, the cargo oil system and electrical installation in way of hazardous spaces are to be checked for compliance with the BKI's Rule requirements. Where intrinsically safe equipment is installed, the Surveyors are to satisfy themselves that a recognised authority has approved such equipment. The safety devices, alarms and essential instruments of the inert gas system are to be verified and the plant generally examined to ensure that it does not constitute a hazard to the vessel (see Note 1).

Note 1:
For the transfer of class or adding class at ship's delivery, items listed in c) and i) may be verified by reviewing the ship's records.

2.3 Condition of IACS PR 01A for the issuance of Interim Certificate of Class

2.3.1 This Requirement is applicable, unless stated otherwise, to ships of over 100 GT of whatever type, selfpropelled or not, restricted or unrestricted navigation, except for "inland waterway" ships.

2.3.2 The age of the ship considered in the procedure for transfer of class is the age calculated from the date of delivery to the date request for class was received.

2.3.3 The obligations of this requirement continue to apply when a ship's class is suspended by the losing Society and for 6 months following withdrawal of a ship's class by the losing Society.

2.3.4 As the ship may be laid up, BKI is to check the classification status from the previous Society in order to verify if requirements in 2. are applicable.

2.3.5 Cases concerning ships of 100 GT or less are dealt with by BKI on a case-by-case basis.

2.3.6 Whenever BKI is requested by an Owner to accept an existing vessel into class, the following applies:

1) the relevant surveys specified in 2.2 are required to be satisfactorily completed for entry into class;

2) for vessels less than 15 years of age, an Interim Certificate of Class can be issued only after the gaining Society has completed: (i) all overdue surveys and (ii) all overdue recommendations/ conditions of class previously issued against the vessel as specified to the Owner by the losing Society. See also 2.3.2;

3) for vessels 15 years of age and over, an Interim Certificate of Class can be issued only after the losing Society has completed: (i) all overdue surveys and (ii) all overdue recommendations/ conditions of class previously issued against the vessel. See also 2.3.2;

4) any outstanding recommendations / conditions of class are to be dealt with by their due dates;

5) the principles given in items 1), 2) and 3) above apply to any additional conditions of class issued against the vessel arising from surveys which were not included in the initial survey status provided to BKI by the losing Society because the surveys were carried out in close proximity to the request for transfer of class. Such additional conditions of class if received after the issuance of the Interim Certificate of Class by BKI and which are overdue are to be dealt with at the first port of call by the relevant Society depending on the age of the vessel;

6) copies of the plans listed in 2.1 are to be provided to BKI as a prerequisite to obtaining a full term Class Certificate.

If the Owner is unable to provide all of the required plans, BKI is to request that the Owner authorise the losing Society to transfer copies of such of these plans as it may possess directly to BKI upon request from BKI, with the advice that the losing Society will invoice BKI and BKI may, in turn, charge the associated costs to the Owner.

2.3.7 Prior to issuing an Interim Certificate of Class, BKI is to obtain:

— from the Owner, a written request for transfer of class, containing an authorisation for BKI to obtain the current classification status from the losing Society; and

— the current class survey status from the Headquarters of the losing Society or one of its designated control or management centres.

2.3.8 BKI cannot issue an Interim Certificate of Class, or other documents enabling the ship to trade:

1) until all overdue surveys and all overdue conditions of class previously issued against the subject ship, as specified to the Owner by the losing Society, have been completed and rectified either by:

   a) BKI for ships less than 15 years of age or

   b) by the losing Society for ships 15 years of age and above;

2) until all relevant surveys specified in 2.2, have been satisfactorily completed;

3) when facilities are not available in the first port of survey, an Interim Certificate of Class may be issued to allow the ship to undertake a direct voyage to a port where facilities are available to complete surveys required in 2.2. In such cases the surveys specified in 2.2 are to be carried out to the maximum extent practicable at the first port of survey, but in no case less than the scope of annual hull surveys, and machinery surveys as required in 2.2.3.B).

4) before giving the opportunity to the Administration to provide any further instructions.

2.4 Limitation of IACS PR 01A for the Interim Certificate of Class

2.4.1 The validity of the Interim Certificate of Class and the subsequent Certificate of Class is subject to any outstanding conditions of class previously issued against the ship being completed by the due date and as specified by the losing Society. Any outstanding conditions of class with their due dates are stated on the Survey endorsement sheets and ship status when the full term Certificate of Class is issued.

2.4.2 If additional information regarding outstanding surveys or conditions of class is received from the losing Society after the Interim Certificate of Class has been issued, any surveys or conditions of class which are overdue are to be dealt with at the first port of call:

— by BKI for ships less than 15 years of age, or

— by the losing Society for ships 15 years of age or over.

If this is not accomplished, the Interim Certificate of Class is withdrawn immediately unless the Owner agrees to proceed directly, without further trading, to a suitable port where any overdue surveys or overdue conditions of class are to be carried out by the relevant Society based on the age of the ship.

Note
Additional information as stated in 2.4.2 means outstanding survey and/or condition of class arising from survey which were not included in the initial status provided to BKI by the losing society because the surveys were carried out in close proximity to the request for transfer of class. This may occur if there was/were survey reports outstanding by losing society.

Although not included in in 2.4.2, information such structural diminution allowances are to be considered as additional information if not provided to BKI by losing society in initial status.

2.5 Certificate of Class

2.5.1 Upon satisfactory review of the survey reports, BKI issues to the Owner the Certificate of Class valid for the whole period of class, provided that the conditions in 2.1 to 2.4 are met. The certificate indicates the class notations.

3. Transfer of ship's classed by another classification society subject to verification of compliance with IACS QSCS at Ships delivery and reported as compliant (IACS PR 1A)

3.1 Documentation to be submitted

3.1.1 The requirements of 2.1 apply.

3.2 Class entry survey

3.2.1 Class entry survey is to be held by BKI with the extent of an annual survey as minimum.

3.3 Condition of IACS PR 01A for the issuance of Interim Certificate of Class

3.3.1 This requirement applies to transfer of class (T.o.C) from one QSCS Class Society into BKI at ship's delivery [5] and applicable when losing society (which has carried out the new construction technical review and surveys) has issued its first Certificate of Class [6].

3.3.2 This requirement is applicable, unless stated otherwise, to ships of over 100 GT of whatever type, self-propelled or not, restricted or unrestricted navigation, except for "inland waterway" ships.

3.3.3 The obligations of this requirement continue to apply when a ship's class is suspended by the losing Society and for 6 months following withdrawal of a ship's class by the losing Society.

3.3.4 As the ship may be laid up, BKI is to check the classification status from the previous Society in order to verify if requirements in 3. are applicable.

3.3.5 Cases concerning ships of 100 GT or less are dealt with by BKI on a case-by-case basis.

3.3.6 Whenever BKI is requested by an Owner to accept a vessel into its class at its delivery, the following applies:

1) any outstanding recommendations / conditions of class are to be dealt with by their due dates;

2) copies of the plans listed in 2.1 are to be provided to BKI as a prerequisite to obtaining a Full Term Certificate of Class.

[5] "At ship's delivery" means that the new construction survey process is completed and the ship has not departed from the yard.

[6] "First Certificate of Class" means either the Interim Certificate of Classification or full term Certificate

If the Owner is unable to provide all of the required plans, BKI is to request that the Owner authorise the losing Society to transfer copies of such of these plans as it may possess directly to BKI upon request from BKI, with the advice that the losing Society will invoice BKI and BKI may, in turn, charge the associated costs to the Owner.

3.3.7 Prior to issuing an Interim Certificate of Class on the date of the vessel's delivery, BKI is to obtain:

1) from the Owner, a written request for transfer of class at vessel's delivery, containing an authorisation for BKI to obtain a copy of the first Certificate of Class, from the losing Society; and

2) the first Certificate of Class from the Headquarters of the losing Society or one of its designated control or management centres or from the attending Surveyor at the yard of the builder including any outstanding conditions of class and information normally contained in the classification status.

3.3.8 BKI can not issue an Interim Certificate of Class, or other documents enabling the vessel to trade:

1) until the Class entry survey with the extent of an annual survey as minimum, have been satisfactorily completed,

2) before giving the opportunity to the Administration to provide any further instructions.

3.4 Limitation of IACS PR 01A for the Interim Certificate of Class

3.4.1 The validity of the Interim Certificate of Class and the subsequent full term Certificate of Class issued by BKI is subject to any outstanding conditions of class previously issued against the ship being completed by the due dates and as specified by the losing Society. Any outstanding conditions of class with their due dates are stated on the Survey endorsement sheets and ship status when the full term Certificate of Class is issued.

3.5 Certificate of Class

3.5.1 Upon satisfactory review of the survey reports, BKI issues to the Owner the Certificate of Class valid for the whole period of class, provided that the conditions in 3.1 to 3.4 are met. The certificate indicates the class notations.

4. Addition of BKI's class to ship in service classed by another classification society subject to verification of compliance with IACS QSCS and reported as compliant (IACS PR 1B)

4.1 Documentation to be submitted

4.1.1 The following documents are to be submitted in addition to the requirements in 2.1.

1) Steel plan:

   A) Plan of tank testing

2) Machinery and Electrical plans:

   A) Couplings and shaft alignment calculation
   B) Diagram of the air, sounding and overflow systems
   C) Diagram of cooling systems (sea water and fresh water)
   D) Diagram of fuel oil system
   E) Diagram of the lubricating oil system
   F) Diagram of the hydraulic systems intended for essential services or located in machinery spaces
   G) Diagrams of sea water and / or freshwater piping systems
   H) Electrical power balance (main and emergency supply)

I) General specification for the automation of the ship

J) Detailed specification of the essential service systems

K) List of components used in the automation circuits, and references (Manufacturer, type, etc.)

L) General diagram showing the monitoring and/or control positions for the various installations, with an indication of the means of access and the means of communication between the positions as well as with the engineers Diagrams of the supply circuits of automation systems, identifying the power source

M) List of monitored parameters for alarm/monitoring and safety systems

N) Diagram of compressed air system

3) Torsional vibration calculations:

A) Torsional vibration calculations

4) Additional Documents required for approval of Alternative Design and Arrangements:

A) Document(s) of Approval of Alternative Design and Arrangements, if any.

5) Expansion of the list of plans:

A) This list shall be expanded depending on the type of ship under the responsibility of the individual Society.

4.2 Class entry survey

4.2.1 Class entry survey is to be held by BKI with the extent as follows:

1) for double class: requirements of 2.2 apply taking account of the conditions of class in the status provided by the first Society;

2) for dual class: annual survey as a minimum

4.3 Condition of IACS PR 01B for the issuance of Interim Certificate of Class

4.3.1 This requirement is applicable, unless stated otherwise, to ships of over 100 GT of whatever type, selfpropelled or not, restricted or unrestricted navigation, except for ”inland waterway” ships.

4.3.2 The obligations of this requirement continue to apply when a ship’s class is suspended by the withdrawal Society and for 6 months following withdrawal of a ship’s class by the withdrawal Society.

4.3.3 Cases concerning ships of 100 GT or less are dealt with by BKI on a case-by-case basis.

4.3.4 Whenever BKI is requested by an Owner to accept an existing vessel already classed by another classification society subject to verification of compliance with IACS QSCS into its class under double or dual class arrangement, the following applies:

1) BKI only accepts a vessel that is free from any overdue surveys or conditions of class;

2) the Owner is to inform first Society of his request to BKI;

3) the Owner is to authorise first Society to submit to BKI its current class status and documents as listed below, for information and use by BKI in conducting its class entry surveys;

A) Damages *

B) Major repairs / rectifications *

C) Conversion of hull-dates *

D) Major alterations of machinery installation-dates *

E) Condition evaluation / hull summary report if applicable

F) History of conditions of class *

G) Thickness measurements from last Class Renewal Survey and subsequent thickness measurements, including areas with substantial corrosion

H) Report of last Class Renewal Survey and subsequent periodical reports

I) Information on coating condition of water ballast tanks (including non ESP vessels) *

J) Restrictions / limitations in navigation area

K) Optional photos when available

* As retained by the first Society

4) when the Owner decides to leave the double or dual class arrangement and prior to withdrawing from the class of one of two Societies, the Owner is to inform BKI of his intended actions;

5) when the Owner is advised that one of the Societies involved in double or dual class arrangement suspends or withdraws class, the Owner is to inform the remaining Society of the action taken by the other Society without delay;

6) copies of the plans listed in 2.1 are to be provided to BKI as a prerequisite to obtaining a full term Class Certificate. If the Owner is unable to provide all of the required plans, BKI is to request that the Owner authorise the first Society to transfer copies of such of these plans as it may possess directly to BKI upon request from BKI.

4.3.5 Prior to issuing an Interim Certificate of Class, BKI is to:

1) obtain from the Owner, a written application for entry into BKI class, containing an authorisation for BKI to obtain the current classification status from the first Society;

2) obtain the current classification survey status from the Headquarters of the first Society or one of its designated control or management centres;

3) carry out and satisfactorily complete all relevant class entry survey as required in 4.2.

4.4 Limitation of IACS PR 01B for the Interim Certificate of Class

4.4.1 The validity of the Interim Certificate of Class and the subsequent Certificate of Class is subject to any outstanding conditions of class previously issued against the ship being completed by the due dates and as specified by the first Society. Any outstanding conditions of class with their due dates are stated on the Survey Endorsement Sheets and ship status when the full term Certificate of Class is issued.

4.5 Certificate of Class

4.5.1 Upon satisfactory review of the survey reports, BKI issues to the Owner the Certificate of Classification valid for the whole period of class, provided that the conditions in 4.1 to 4.4 are met. The certificate indicates the class notations.

5. Addition of BKI's class to ship classed by another classification society subject to verification of compliance with IACS QSCS at the ship's delivery and reported as compliant (IACS PR 1B)

5.1 Documentation to be submitted

5.1.1 The requirements of 4.1.1 apply.

5.2 Class entry survey

5.2.1 Class entry survey is to be held by BKI with the extent of annual survey as a minimum.

5.3 Condition of IACS PR 01B for the issuance of Interim Certificate of Class

5.3.1 This requirement applies for adding a BKI class at ship's delivery [5)] and applicable when the society (which has carried out the new construction technical review and surveys) has issued its first Certificate of Class [6)].

5.3.2 This requirement is applicable, unless stated otherwise, to ships of over 100 GT of whatever type, selfpropelled or not, restricted or unrestricted navigation, except for "inland waterway" ships.

5.3.3 The obligations of this requirement continue to apply when a ship's class is suspended by the withdrawal Society and for 6 months following withdrawal of a ship's class by the withdrawal Society.

5.3.4 Cases concerning ships of 100 GT or less are dealt with by BKI on a case-by-case basis

5.3.5 Whenever BKI is requested by an Owner to accept an vessel already classed by another classification society subject to verification of compliance with IACS QSCS into its class under double or dual class arrangement at its delivery, the following applies:

1) the Owner is to inform first Society of his request to BKI;
2) the Owner is to authorise first Society to submit to BKI its Certificate of Class;
3) when the Owner decides to leave the double or dual class arrangement and prior to withdrawing from the class of one of two Societies the Owner is to inform BKI of his intended actions;
4) when the Owner is advised that one of the Societies involved in double or dual class arrangement suspends or withdraws class, the Owner is to inform the remaining Society of the action taken by the other Society without delay;
5) copies of the plans listed in 2.1 are to be provided to BKI as a prerequisite to obtaining a full term Class Certificate. If the Owner is unable to provide all of the required plans, BKI is to request that the Owner authorise the first Society to transfer copies of such of these plans as it may possess directly to BKI upon request from BKI.

5.3.6 Prior to issuing an Interim Certificate of Class, BKI is to:

1) obtain from the Owner, a written application for entry into BKI class, containing an authorisation for BKI to obtain the copy of first Certificate of Class from the first Society;
2) obtain the first Certificate of Class from the Headquarters of the first Society or one of its designated control or management centres or from the attending Surveyor at the yard of the builders, including any outstanding conditions of class and information normally contained in the classification status;
3) carry out and satisfactorily complete all relevant class entry survey as required in 5.2.

5.4 Limitation of IACS PR 01B for the Interim Certificate of Class

5.4.1 Prior to final entry into BKI class, BKI is obligated to obtain plans and information in accordance with the requirements of 2.1.

5.5 Certificate of Class

5.5.1 Upon satisfactory review of the survey reports, BKI issues to the Owner the Certificate of Class valid for the whole period of class, provided that the conditions in 5.1 to 5.4 are met. The certificate indicates the class notations.

6. Ships in service not classed at all or class entry of non-compliant [4)] ships (IACS PR 1D)

6.1 Documentation to be submitted

The following particulars and/or drawings are to be submitted:

1) Main plans :
   - A) General Arrangement
   - B) Capacity Plan
   - C) Hydrostatic Curves/Tables
   - D) Loading Manual, where required
   - E) Damage Stability calculation, where required
2) Steel plans:
   - A) Midship Section
   - B) Scantling Plan
   - C) Decks
   - D) Shell Expansion
   - E) Transverse Bulkheads
   - F) Rudder and Rudder Stock
   - G) Hatch Covers
   - H) Stern frame
3) Machinery plans:
   - A) Machinery Arrangement
   - B) Shafting arrangement, i.e. Intermediate, Thrust and Screw Shafts
   - C) Propeller
   - D) Main Engines, Propulsion Gears and Clutch Systems (or Manufacturer make, model and rating information)
   - E) For Steam Turbine Vessels, Main Boilers, Superheaters and Economisers (or Manufacturer make, model and rating information) and Steam Piping
   - F) Bilge and Ballast Piping Diagram
   - G) Wiring Diagram
   - H) Steering Gear Systems Piping and Arrangements and Steering Gear Manufacturer make and model information
   - I) For vessels less than two (2) years old, torsional vibration calculations are to be submitted.
   - J) Additional plans required for unattended machinery space notation:
     - a) Instrument and Alarm List
     - b) Fire Alarm System
     - c) List of Automatic Safety Functions (e.g. slowdowns, shutdowns, etc.)
     - d) Function Testing Plan.
4) Additional requirements for vessels with ice class notation:
   - A) Plans for flexible couplings and/or torque limiting shafting devices in the propulsion line shafting (or manufacturer make, model and rating information) are to be submitted.
5) Additional plans required for oil tankers:

A) Pumping arrangement at the forward and after ends and drainage of cofferdams and pump rooms are to be submitted.

6) Additional plans required for Ro-Ro ship:

A) Operating and Maintenance Manual (OMM), if required

Additional information may be necessary according to Flag State requirements.

Alternative technical data may be accepted by BKI in lieu of specific items of the listed documentation not available at the time of the transfer of class.

6.2 Class entry survey

6.2.1 A Class entry survey is to be carried out by BKI, the minimum extent of which is to be based on the age and type of the vessel as follows:

1) Class Renewal Survey of Hull and Machinery including thickness measurements,

2) Dry docking Survey,

3) Tail-shaft Survey(s),

4) Boiler Survey(s) and Pressure vessel survey(s).

6.2.2 BKI may request further examinations, tests and measurements, including but not limited to material testing, non-destructive testing, hydraulic and hydrostatic tests and sea trial.

6.2.3 Where during any portion of the 5 (five) years prior to the request for classification being received, the vessel has been previously classed by BKI or a Society subject to verification of compliance with QSCS and has not been subject to alteration or modification since class was withdrawn, the survey requirements may be specially considered but are not to be less than the following:

1) For vessels previously classed with BKI – all overdue surveys and overdue conditions of class, or

2) For vessels previously classed with a Society subject to verification of compliance with QSCS – surveys the same as those required by 2.2.

6.3 Condition of IACS PR 01D for the issuance of Interim Certificate of Class

6.3.1 This provision (refer to IACS PR 01D) contains procedures and requirements pertaining to class entry of ships not subject to PR 1A or PR 1B and is applicable, unless stated otherwise, to vessels of over 100 GT of whatever type, self-propelled or not, restricted or unrestricted service, except for ”inland waterway” vessels.

6.3.2 Cases concerning ships of 100 GT or less are dealt with by BKI on a case-by-case basis.

6.3.3 Prior to issuing an Interim Certificate of Class BKI is to obtain a written request for classing the vessel from the owner.

6.3.4 BKI is not to issue an Interim Certificate of Class, or other documents enabling the vessel to trade under its classification:

1) until all required surveys as required in 6.2 have been completed;

2) until the appraisal of the plans listed in 6.1, as required by BKI to verify compliance with its applicable class Rules, has been carried out;

3) where issues remain outstanding, BKI may impose a conditions of class for a limited time period in accordance with Section 3, A.3.7.

4) before giving the opportunity to the Administration to provide any further instruction.

6.4 Certificate of Class

6.4.1 Upon satisfactory review of the survey reports, BKI issues to the Owner the Certificate of Class valid for the whole period of class, provided that the conditions in 6.1 to 6.3 are met. The certificate indicates the class notations.

This page intentionally left blank

Section 3 Surveys – General Requirements

A. General Information 3-1
B. Surveys for Maintenance of Class 3-7
C. Periodic Survey of Fuel Installations on Ships other than Liquefied Gas Carriers utilizing gas or other low flash point fuels 3-56
D. Thickness Measurement 3-60

A. General Information

1. Surveys for Maintenance of Class

1.1 For maintenance of the Class, the regular periodical and non-periodical surveys of hull, machinery, including electrical installation, defined below have to be performed, see also Section 2, B.

Other surveys performed by BKI are listed in Section 4.

1.2 Surveys required for maintenance of the Class, e.g. in the case of repairs of, or modifications to any parts subject to Classification, are to be agreed with the BKI in due time, so that the measures envisaged may be assessed and supervised, as required.

1.2.1 The surveys conducted by BKI may be subject to Audit by an independent Accredited Certification Body (ACB) as per the requirements of ISO 9001:2008 standard and Quality Management System Certification Scheme (QSCS) of IACS.

1.3 The Surveyors are to be given access at any time to the ship and/or to the workshops, so that they may perform their duties. For the purpose of audit by ACB, ACB auditors are to be given the necessary access to the ship, shipyard or works when requested by BKI. See also Section 2, C.3.1.4.

In this connection, all areas to be surveyed have to be cleared, cleaned and to be made free from gas, as deemed necessary by the Surveyor.

The Class Certificates and other particulars relating to classification are to be made available to the Surveyor on request.

1.4 Surveys conducted during a voyage may be agreed and credited to periodical surveys due (e.g. inspection of large holds by boat). The prerequisites, procedures and specific (e.g. weather) conditions to be met will be fixed from case to case. The decision as to feasibility of the survey may only be taken in agreement with the Surveyor.

1.5 BKI will inform the owner or operator about the status of Class, indicating the last recognized surveys and the next due dates. However, even if not provided with such information, the operator is obliged to have the surveys stipulated by the present Rules performed.

1.6 BKI may agree to test and analysis procedures as a supplement to or equivalent substitute for conventional survey and inspection such as by uncovering/opening up of components, see also B.1.3.4.

1.7 BKI reserves the right for given reasons, e.g. in the light of special experience gained during operation, to extend the scope of survey and/or inspection or to carry that out with two Surveyors, if needed.

1.8 BKI reserves the right to demand surveys to be held between the due dates of regular surveys, if this is necessary, see B.2.

1.9 Special consideration may be given in application of relevant sections of this Rules for commercial ships owned or chartered by governments, which are utilized in support of military operations or services.

2. Selection of Surveyors

On principle, the acting Surveyors will be chosen by BKI. However, the operator of a ship and/or an installation classed is free to have any findings of surveys or decisions which he deems to be doubtful checked by other Surveyors upon his request.

3. Documentation, Confirmation of Class

3.1 The records of each survey, as well as any requirements upon which maintenance of the Class has been made conditional will be stated in the relevant Certificate of Classification. By his signature in the Certificate and other documents the Surveyor only certifies what he himself has seen and checked during the particular survey.

3.2 The reports prepared by the Surveyor will be checked at BKI Head Office. If there are no objections, the confirmation of Class effected by the Surveyor in the Certificate will acquire final validity.

3.3 In the Survey Status the dates of the surveys will be indicated, such as Class Renewals, Annual Survey, Intermediate Survey, Continuous Class Renewal, bottom and propeller shaft survey as well as recommendations and their due dates.

3.4 A confirmation of Class effected by the Surveyor relates to the kind of survey referred to in the report and is valid under the reservation that examination will not give cause for any objections, see 3.2.

3.5 On request, the Class may be confirmed in writing by a separate Certificate. However, such Certificates are valid only if issued by BKI Head Office or if, in exceptional cases, Head Office has expressly authorized the Branch Offices to do so.

3.6 Where defects are repaired provisionally only, or where the Surveyor does not consider immediate repairs or replacements necessary, the vessel's Class may be confirmed for a limited period by making an entry in the Certificate of Classification. Cancellation of such limitations will also have to be indicated in the Certificate of Classification, as well as in the Survey Report see also Section 2, B.3.1.1.

3.7 Imposing, clearing and controlling Conditions of Class

3.7.1 Condition of Class shall be imposed for the following:

A) Repairs and/or renewals related to damages that affect Classification (e.g. grounding, structural damages, machinery damages, wastage over the allowable limits, etc.)

B) Supplementary survey requirements

C) Temporary repairs

3.7.2 For repairs not completed at the time of survey, a Condition of Class is to be imposed. In order to provide adequate information to the surveyor attending for survey of the repairs, the Condition of Class is to be sufficiently detailed with identification of items to be repaired. For identification of extensive repairs, reference may be given to the survey report.

3.7.3 Condition of Class may require imposing limitations related to navigation and operation that are deemed necessary for continued operation under Classification (e.g. loss of anchor and/or chain, etc).

3.7.4 Condition of Class are given in writing with a time limit for completion to the owner's representatives/Ship's Master, and are clearly stated on the Certificate of Class or an attachment to the Certificate of Class and/or class survey status or report.

3.7.5 Owners will be notified of these dates and that the vessel's class will be subject to a suspension procedure if the item is not dealt with, or postponed, by the due date.

3.7.6 Clearance of Condition of Class shall be supported by an Occasional survey report giving details of all associated repairs and/or renewals, or of the supplemental surveys carried out. Repairs carried out shall be reported with identification of:

— Compartment and location

— Structural member

— Repair method

— Repair extent

— NDT/Tests

4. Surveys in accordance with flag state regulations

4.1 Where surveys are required on account of international conventions and of corresponding laws/official ordinances of a flag state, BKI will undertake them on request, or by official order, acting on behalf of the authorities concerned, based on the respective provisions; this includes surveys according to:

— the International Convention on Load Lines (ILLC 66)

— the International Convention for the Safety of Life at Sea (SOLAS 74)

— the International Convention for the Prevention of Pollution from Ships (MARPOL 73/78)

— the International Convention for the Control and Management of Ship's Ballast Water and Sediments, 2004 (BWM Convention)

— the IMO Codes, e.g. on Chemical and Gas Tankers

— the related Conventions of the International Labour Organization (ILO)

— etc.

Where possible, such surveys will be carried out simultaneously with the Class Surveys.

4.2 BKI will also undertake on request other surveys and checks stipulated by additional regulations and requirements of the flag state. Such surveys are subject to agreements made in each individual case and/or to the regulations of the country concerned.

4.3 All activities as outlined in 4.1 and 4.2 and, where applicable, issuance of relevant Certificates are likewise subject to the general terms and conditions of Section 1.

4.4 If for some reason a vessel's Class has expired or has been withdrawn by BKI, all Statutory Certificates issued by BKI will automatically become void. If subsequently the Class is renewed or re-assigned, validity of these Certificates will be revived within the scope of its original period of validity, provided that all surveys meanwhile having fallen due have been carried out.

5. Preparations for Survey

5.1 Conditions for survey

5.1.1 The Owner is to provide the necessary facilities for a safe execution of the survey.

5.1.2 Tanks and spaces are to be safe for access, i.e. gas freed, ventilated and illuminated.

5.1.3 In preparation for survey and thickness measurements and to allow for a thorough examination, all spaces are to be cleaned including removal from surfaces of all loose accumulated corrosion scale. Spaces are to be sufficiently clean and free from water, scale, dirt, oil residues etc. to reveal corrosion, deformation, fractures, damages, or other structural deterioration.

However, those areas of structure whose renewal has already been decided by the Owner need only be cleaned and descaled to the extent necessary to determine the limits of the areas to be renewed.

5.1.4 Sufficient illumination is to be provided to reveal corrosion, deformation, fractures, damages or other structural deterioration.

5.1.5 Where soft or semi-hard coatings have been applied, safe access is to be provided for the surveyor to verify the effectiveness of the coating and to carry out an assessment of the conditions of internal structures which may include spot removal of the coating. When safe access cannot be provided, the soft or semi-hard coating is to be removed.

5.1.6 Casings, ceilings or linings, and loose insulation, where fitted, are to be removed, as required by the Surveyor, for examination of plating and framing. Compositions on plating are to be examined and sounded, but need not be disturbed if found adhering satisfactorily to the plating.

5.1.7 In refrigerated cargo spaces the condition of the coating behind the insulation is to be examined at representative locations. The examination may be limited to verification that the protective coating remains effective and that there are no visible structural defects. Where POOR coating condition is found, the examination is to be extended as deemed necessary by the Surveyor. The condition of the coating is to be reported. If indents, scratches, etc., are detected during surveys of shell plating from the outside, insulations in way are to be removed as required by the Surveyor, for further examination of the plating and adjacent frames.

5.2 Access to structures

5.2.1 For survey, means are to be provided to enable the surveyor to examine the hull structure in a safe and practical way.

5.2.2 For survey in cargo holds and ballast tanks, one or more of the following means for access, acceptable to the Surveyor, is to be provided:

— permanent staging and passages through structures;

— temporary staging and passages through structures;

— hydraulic arm vehicles such as conventional cherry pickers, lifts and movable platforms;

— boats or rafts;

— other equivalent means.

5.2.3 For Surveys conducted by use of a remote inspection technique, one or more of the following means for access, acceptable to the Surveyor, is to be provided:

— Unmanned robot arm

— Remotely Operated Vehicles (ROV)

— Unmanned Aerial Vehicles / Drones

— Other means acceptable to BKI

5.3 Equipment for survey

5.3.1 Thickness measurement is normally to be carried out by means of ultrasonic test equipment. The accuracy of the equipment is to be proven to the Surveyor as required. Thickness measurements are to be carried out by a firm approved by BKI in accordance with Rules for Approval of Manufacturers and Service Suppliers (Pt.1, Vol.XI).

5.3.2 One or more of the following fracture detection procedures may be required if deemed necessary by the Surveyor:

— radiographic equipment;

— ultrasonic equipment;

— magnetic particle equipment;

— dye penetrant.

5.4 Survey at sea or at anchorage

5.4.1 Survey at sea or at anchorage may be accepted provided the Surveyor is given the necessary assistance from the personnel onboard. Necessary precautions and procedures for carrying out the survey are to be in accordance with 5.1, 5.2 and 5.3.

5.4.2 A communication system is to be arranged between the survey party in the tank or space and the responsible officer on deck. This system must also include the personnel in charge of ballast pump handling if boats or rafts are used.

5.4.3 When boats or rafts are used, appropriate life jackets are to be available for all participants. Boats or rafts are to have satisfactory residual buoyancy and stability even if one chamber is ruptured. A safety checklist is to be provided.

5.4.4 Surveys of tanks by means of boats or rafts may only be undertaken at the sole discretion of the Surveyor, who is to take into account the safety arrangements provided, including weather forecasting and ship response in reasonable sea conditions [1].

6. External service suppliers

The personnel or firms engaged in services affecting classification and statutory work are subject to approval by BKI.

7. Calibration of measuring equipment

7.1 General

Inspection, measuring and test equipment, which Surveyors rely on to make decisions affecting classification or statutory certification, are to be individually identified and calibrated to a recognized national or international standard.

7.2 Simple Measuring Equipment

The Surveyor may accept simple measuring equipment (e.g. rulers, measuring tapes, weld gauges, micrometers) without individual identification or confirmation of calibration, provided they are of standard commercial design, properly maintained and periodically compared with other similar equipment or test pieces.

7.3 Shipboard Equipment

The Surveyor may accept equipment fitted on board a ship and used in examination of shipboard equipment (e.g. pressure, temperature or rpm gauges and meters) based either on calibration records or comparison of readings with multiple instruments.

[1] Reference is made to Guidance for Marine Industry (Pt.1, Vol.AC) Sec.2.R-39 - Guidelines for use of Boats or Rafts for Close-up surveys.

7.4 Other Equipment

The Surveyor shall satisfy himself that other equipment (e.g. tensile test machines, ultrasonic thickness measurement equipment, etc.) is calibrated to a recognized national or international standard.

8. Remote Inspection Techniques (RIT)

8.1 Remote Inspection Techniques (RIT) are permitted as an alternative to close-up survey. The RIT shall provide the information normally obtained from a close-up survey. RIT surveys shall be carried out in accordance with the requirements given here-in and the requirements of Guidance for Marine Industry (Pt.1, Vol.AC) Sec.3.R-42 Guidelines for Use of Remote Inspection Techniques for surveys. These considerations shall be included in the proposals for use of a RIT which shall be submitted in advance of the survey so that satisfactory arrangements can be agreed with BKI.

8.2 Consideration may be given by the attending Surveyor to allow use of Remote Inspection Techniques (RIT) as an alternative to close-up survey. Surveys conducted using a RIT are to be completed to the satisfaction of the attending Surveyor.

8.3 The equipment and procedure for observing and reporting the survey using a RIT shall be discussed and agreed with the parties involved prior to the RIT survey, and suitable time shall be allowed to set-up, calibrate and test all equipment beforehand.

8.4 When using a RIT as an alternative to close-up survey, if not carried out by BKI itself, it shall be conducted by a firm approved as a service supplier according to Rules for Approval of Manufacturers and Service Suppliers (Pt.1, Vol.XI) and shall be witnessed by an attending surveyor of BKI.

8.5 The structure to be examined using a RIT shall be sufficiently clean to permit meaningful examination. Visibility shall be sufficient to allow for a meaningful examination. The classification society shall be satisfied with the methods of orientation on the structure.

8.6 The surveyor shall be satisfied with the method of data presentation including pictorial representation, and a good two-way communication between the surveyor and RIT operator shall be provided.

8.7 If the RIT reveals damage or deterioration that requires attention, the surveyor may require traditional survey to be undertaken without the use of a RIT.

9. Remote Classification Surveys

9.1 General

9.1.1 Remote Survey is a process of verifying that a ship and its equipment are in compliance with these Section where the verification is undertaken, or partially undertaken, without attendance on board by a surveyor.

9.1.2 Remote survey will only be appropriate provided the level of assurance is not compromised, and the survey is carried out with the same effectiveness as and is equivalent to, a survey carried out with attendance on board by a surveyor.

9.2 Application

9.2.1 The survey which may be carried out remotely are limited as specified below.

— Postponement, issuance, deletion of Condition of Class

— Postponement of Class surveys

— Items of Continuous Survey for Machinery or Planned Maintenance Scheme

— Occasional survey for change of ship's name

— Occasional survey for loss of anchor

— Occasional survey for minor machinery or equipment damage

— Occasional survey for minor hull damage

— Occasional survey for minor deficiencies/defects not subject to a Condition of Class

— In-water bottom survey

— Specified items of a class periodical survey (excluding additional specific items of initial or renewal surveys), including completion of remaining items of a part held class periodical survey

— Non-propelled / un-manned barges/pontoon – annual surveys when no survey of hull compartments is due

— Minor retrofit / installation/upgrade of equipment

— Documentary or data based initial / periodical / renewal / occasional verifications and surveys

9.2.2 Unless expressly provided otherwise, the remote survey may be permitted when surveyor cannot attend on board. The technical requirement will be stipulated by BKI after the request is permitted by BKI Head office.

9.2.3 When the classification survey is also related to a statutory item, and BKI is carrying out the statutory survey on behalf of the flag State Administration, then the flag State Administration acceptance is required, and possible additional requirements are to be complied with.

9.2.4 The Surveyor may require to confirm the results of the remote survey, by a survey attended on board by a Surveyor, to credit the relevant survey items, in case the remote survey is not carried out to the Surveyor's satisfaction or it is required by BKI Head Office.

B. Surveys for Maintenance of Class

1. Periodical surveys

1.1 Annual Surveys

1.1.1 Schedule

Annual Surveys are to be held within 3 months before or after each anniversary date of the date of the initial classification survey or the completion of the last Class Renewal Survey.

Anniversary date means the day and the month of each year which will correspond to the date of expiry of the relevant certificate.

1.1.2 Scope

The survey is to consist of an examination for the purpose of ensuring, as far as practicable, that the hull, hatch covers, hatch coamings, closing appliances, equipment and related piping are maintained in a satisfactory condition.

1) **Hull items:**

— examining, in general and as far as can be seen, the hull and its closing appliances;

— examining the anchoring and mooring equipment as far as can be seen, for ships built after 01/01/2007, confirming that the towing and mooring equipment is properly marked with any restriction associated with its safe operation;

— examining, for bulk carriers of 150 m and above, where appropriate, the ship's structure in accordance with the Ship Construction File, taking into account identified areas that need special;

— examining the collision and the other watertight bulkheads as far as can be seen;

— examining and testing (locally and remotely) all the watertight doors in watertight;

— examining the arrangements for closing openings in the shell plating below the freeboard deck;

— checking the ballasting arrangements;

— examining each bilge pump and confirming that the bilge pumping system for each watertight compartment is satisfactory;

— confirming that the drainage from enclosed cargo spaces situated on the freeboard deck is satisfactory;

— examining visually the drainage facilities for blockage or other damage and confirming the provision of means to prevent blockage of drainage arrangements, for closed vehicle and Ro-Ro spaces and special category spaces where fixed pressure water-spraying systems are used;

— confirming, when appropriate and as far as is practicable when examining internal spaces on oil tankers and bulk carriers, that the means of access to cargo and other spaces remain in good condition;

— examining the functionality of bilge well alarms to all cargo holds and conveyor tunnels;

— for bulk carriers, examining the hold, ballast and dry space water level detectors and their audible and visual alarms;

— for bulk carriers, checking the arrangements for availability of draining and pumping systems forward of the collision bulkhead;

— for single hull, single hold cargo ships, examining the cargo hold water level detector and its audible and visual alarm;

— **Survey of watertight cable transits:**

- These requirements apply to all vessels having GT $\geq$ 500 operating on international voyages contracted for construction on or after 1st July 2021. A cable Transit Seal Systems Register is to be provided by the shipbuilder for all watertight cable transits fitted to the vessel
- The Cable Transit Seal Systems Register (Register), as detailed in Annex A.5, is to be reviewed to confirm it is being maintained and as far as practicable the transits are to be examined to confirm their satisfactory condition;
- Where there are records entered since the last annual survey of any disruption to the cable transits or installation of new cable transits, the satisfactory condition of those transits is to be confirmed by review of records and, if deemed necessary, by examination. The results are to be recorded in the Register against the specific cable transit.

2) **Machinery and Electrical items:**

— confirming that the machinery, boilers and other pressure vessels, associated piping systems and fittings are installed and protected so as to reduce to a minimum any danger to persons on board, due regard being given to moving parts, hot surfaces and other hazards;

— confirming that the normal operation of the propulsion machinery can be sustained or restored even though one of the essential auxiliaries becomes inoperative;

— confirming that means are provided so that the machinery can be brought into operation from the dead ship condition without external aid;

— carrying out a general examination of the machinery, the boilers, all steam, hydraulic, pneumatic and other systems and their associated fittings to see whether they are being properly maintained and with particular attention to the fire and explosion hazard;

— examining and testing the operation of main and auxiliary steering arrangements, including their associated equipment and control systems;

— confirming that the means of communication between the navigation bridge and steering gear compartment and the means of indicating the angular position of the rudder are operating satisfactorily;

— confirming that with ships having emergency steering positions there are means of relaying heading information and, when appropriate, of supplying visual compass readings to the emergency steering position;

— confirming that the various alarms required for hydraulic power-operated, electric and electro-hydraulic steering gears are operating satisfactorily and that the re-charging arrangements for hydraulic power-operated steering gears are being maintained;

— examining the means for the operation of the main and auxiliary machinery essential for the propulsion and the safety of the ship, including, when applicable, the means of remotely controlling the propulsion machinery from the navigating bridge (including the control, monitoring, reporting, alert and safety actions) and the arrangements to operate the main and other machinery from a machinery control room;

— confirming the operation of the ventilation for the machinery spaces;

— confirming that the engine room telegraph, the second means of communication between the navigation bridge and the machinery space and the means of communication with any other positions from which the engines are controlled are operating satisfactorily;

— confirming that the engineer's alarm is clearly audible in the engineers' accommodation;

— examining, as far as practicable, visually and in operation, the electrical installations, including the main source of power and the lighting systems;

— confirming, as far as practicable, the operation of the emergency source(s) of electrical power including their starting arrangements, the systems supplied and, when appropriate, their automatic operation;

— examining, in general, that the precautions provided against shock, fire and other hazards of electrical origin are being maintained;

— examining the arrangements for periodically unattended machinery spaces and, in particular, the random testing of alarm, automatic and shutdown functions;

— examining, where applicable, the alternative design and arrangements for machinery or electrical installations, or fire safety, in accordance with the test, inspection and maintenance requirements, if any, specified in the approved documentation;

— confirming, as far as practicable, that no changes have been made in the structural fire protection, examining any manual and automatic fire doors and proving their operation, testing the means of closing the main inlets and outlets of all ventilation systems and testing the means of stopping power ventilation systems from outside the space served;

— confirming that the means of escape from accommodation, machinery and other spaces are satisfactory;

— examining the helicopter facilities;

— examining visually the condition of all the non-metallic expansion joints in piping systems as appropriate, located below the deepest load waterline, and checking the relevant service record;

— examining visually and confirming operation of the towing winch emergency release system;

3) **Load line items:**

— checking, in general, that there has been no deterioration in the strength of the hull (LLC 66/88 reg.1);

— checking of the positions of the deck line and load line which, if necessary, are to be re-marked and re-painted (LLC 66/88 regs.4 to 9);

— checking that no alterations have been made to the hull or superstructures that would affect the calculations determining the position of the load lines (LLC 66/88 regs.11 to 45);

— examining the superstructure end bulkheads and the openings therein (LLC 66/88 regs.11 and 12);

— examining the means of securing the weathertightness of cargo hatchways, other hatchways and other openings on the freeboard and superstructure decks (LLC 66/88 regs.13 to 18);

— examining the ventilators and air pipes, including their coamings and closing appliances (LLC 66/88 regs.19 and 20);

— examining the watertight integrity of the closures to any openings in the ship's side below the freeboard deck (LLC 66/88 reg.21);

— examining the scuppers, inlets and discharges (LLC 66/88 reg.22);

— examining the garbage chutes (LLC 66/88/03 reg.22-1);

— examining the means provided to minimize water ingress through the spurling pipes and chain lockers (LLC 66/88/03 reg.22-2);

— examining the side scuttles and deadlights

— examining the bulwarks including the provision of freeing ports, special attention being given to any freeing ports fitted with shutters (LLC 66/88/03 regs.24 and 25);

— examining the guardrails, gangways, walkways and other means provided for the protection of the crew and means for safe passage of crew (LLC 66/88/03 regs.25 and 25-1);

— examining the special requirements for ships permitted to sail with type "A" or type "B-minus" freeboards (LLC 66/88/03 regs.26 and 27);

— checking, when applicable, the fittings and appliances for timber deck cargoes (LLC 66/88 regs.42 to 45).

4) **Fire fighting equipment:**

— examining the fire pumps, fire main, hydrants, hoses and nozzles and the international shore connection and checking that each fire pump, including the emergency fire pump, can be operated separately so that two jets of water are produced simultaneously from different hydrants at any part of the ship whilst the required pressure is maintained in the fire main,

— for ships designed to carry containers on or above the weather deck, as applicable, examining the water mist lance, and as appropriate, the mobile water monitors and all necessary hoses, fittings and required fixing hardware,

— checking the provision and randomly examining the condition of the portable and non-portable fire extinguishers,

— confirming that the firefighters' outfits including its self-contained compressed air breathing apparatus and emergency escape breathing devices (EEBDs) are complete and in good condition, that the cylinders, including the spare cylinders, of any required self-contained breathing apparatus are suitably charged, and that on board means of recharging breathing apparatus cylinders used during drills or a suitable number of spare cylinders to replace those used are provided, and provision of two-way portable radiotelephone apparatus of an explosion-proof type or intrinsically safe,

— checking the operational readiness and maintenance of firefighting systems,

— examining the fixed firefighting system for the machinery, cargo, vehicle, special category and ro-ro spaces, as appropriate, and confirming that its means of operation is clearly marked,

— examining the fire-extinguishing and special arrangements in the machinery spaces and confirming, as far as practicable and as appropriate, the operation of the remote means of control provided for the opening and closing of the skylights, the release of smoke, the closure of the funnel and ventilation openings, the closure of power operated and other doors, the stopping of ventilation and boiler forced and induced draft fans and the stopping of oil fuel and other pumps that discharge flammable liquids,

— checking that fixed carbon dioxide fire-extinguishing systems for the protection of machinery spaces and cargo pump-rooms, where applicable, are provided with two separate controls, one for opening of the gas piping and one for discharging the gas from the storage container, each of them located in a release box clearly identified for the particular space,

— examining, as far as possible, and testing, as feasible, any fire detection and alarm system and any sample extraction smoke detection system,

— examining the fire-extinguishing systems for spaces containing paint and/or flammable liquids and deep-fat cooking equipment in accommodation and service spaces,

— examining the helicopter facilities,

— examining the arrangements for remote closing of valves for oil fuel, lubricating oil and other flammable oils and confirming, as far as practicable and as appropriate, the operation of the remote means of closing the valves on the tanks that contain oil fuel, lubricating oil and other flammable oils,

— examining and testing of the general emergency alarm system,

— examining the fire protection arrangements in cargo, vehicle and ro-ro spaces, including the fire safety arrangements for vehicle carriers carrying motor vehicles with compressed hydrogen or natural gas in their tanks for their own propulsion as cargo, as applicable, and confirming, as far as practicable and as appropriate, the operation of the means of control provided for closing the various openings,

— examining and testing the portable gas detectors suitable for the detection of the gas fuel, for vehicle carriers carrying motor vehicles with compressed hydrogen or natural gas in their tanks for their own propulsion as cargo,

— examining, where applicable, the alternative design and arrangements for fire safety or life-saving appliances and arrangements, in accordance with the test, inspection and maintenance requirements, if any, specified in the approved documentation. This requirement is applicable only for the firefighting protection,

— examining, when appropriate, the special arrangements for carrying dangerous goods, including checking the electrical equipment and wiring, the ventilation, the provision of protective clothing and portable appliances and the testing of the water supply, bilge pumping and any water spray system.

5) **Examination of weather decks, ship side plating above water line, hatch covers and coamings.**

— Confirmation is to be obtained that no unapproved changes have been made to the hatch covers, hatch coamings and their securing and sealing devices since the last survey.

— Where mechanically operated steel covers are fitted, checking the satisfactory conditions, as applicable, of:

- hatch covers;
- tightness devices of longitudinal, transverse and intermediate cross junctions (gaskets, gasket lips, compression bars, drainage channels);
- clamping devices, retaining bars, cleating;
- chain or rope pulleys;
- guides;
- guide rails and track wheels;

- stoppers, etc.;
- wires, chains, gypsies, tensioning devices;
- hydraulic system essential to closing and securing; safety locks and retaining devices.

— Where portable covers, wooden or steel pontoons are fitted, checking the satisfactory condition where applicable, of:

- wooden covers and portable beams, carriers or sockets for the portable beam, and their securing devices;
- steel pontoons,
- tarpaulins;
- cleats, battens and wedges;
- hatch securing bars and their securing devices;
- loading pads/bars and the side plate edge;
- guide plates and chocks;
- compression bars, drainage channels and drain pipes (if any).

— Checking the satisfactory condition of hatch coaming plating and their stiffeners, where applicable.

— Random checking of the satisfactory operation of mechanically operated hatch covers is to be made including:

- stowage and securing in open condition;
- proper fit and efficiency of sealing in closed condition;
- operational testing of hydraulic and power components, wires, chains, and link drives.

— Examination of the weld connection between air pipes and deck plating.

— External examination of all air pipe heads installed on the exposed decks.

— Examination of flame screens on vents to all bunker tanks.

— Examination of ventilators, including closing devices, if any.

6) **Suspect Areas**

Suspect Areas identified at previous surveys are to be examined. Thickness measurements are to be taken of the areas of substantial corrosion and the extent of thickness measurements is to be increased to determine areas of substantial corrosion. Table 3.2 may be used as guidance for these additional thickness measurements. These extended thickness measurements are to be carried out before the annual survey is credited as completed.

Note:

these requirements are not applicable to cargo tanks of oil tankers, chemical tankers and double hull oil tankers, surveyed in accordance with Section 4-I, B, Section 4-I, D and Section 4-I, C.

7) **Examination of Ballast Tanks**

Examination of ballast tanks when required as a consequence of the results of the Class Renewal Survey and Intermediate Survey is to be carried out. When considered necessary by the surveyor, or where extensive corrosion exists, thickness measurement is to be carried out. If the results of these thickness measurements indicate that Substantial Corrosion is found, then the extent of thickness measurements is to be increased to determine areas of substantial corrosion. Table 3.2 may be used as guidance for these additional measurements. These extended thickness measurements are to be carried out before the annual survey is credited as completed.

8) **Refrigerating Installation**

— The refrigerating machinery is to be checked in operation. During this check, the delivery and discharge temperatures at the air coolers and at the brine coolers respectively, the temperatures of the refrigerated cargo spaces, or refrigerated cargo containers, of the ambient air, the cooling water inlet and outlet, the refrigerant in the condenser and evaporator will be determined.

— The entire plant for the power supply, including the part of the electrical plant necessary for operation of the refrigerating installation, is to be inspected externally. The Surveyor is to obtain the information required on the condition of the installation from the operating data records for the refrigerating and machinery installation and is then to decide whether individual machines will have to be opened up for inspection.

— Insulation resistance measurements are to be carried out at the electrical plant. Any measurement protocols prepared on board may be considered.

— All pressure vessels, including valves, fittings and safety devices, are to be inspected externally.

— If ammonia is used as refrigerant, the covers of one or more heat exchangers are to be taken off for inspection of the tube plates. Depending on the inspection result, the Surveyor may require further parts of the installation to be opened up for inspection.

— The refrigerant and brine pipes and their insulation are to be examined externally, and the pipes are to be tested for tightness during operation.

— In the refrigerated cargo spaces, the air coolers, the brine grids and direct expansion evaporators respectively, as well as circulating fans, are to be inspected during operation.

— The defrosting devices are to be externally inspected. Where necessary, proof is to be furnished of their proper functioning.

— Bilge coverings are to be opened up. Bilges are to be checked as to their perfect condition. The drains of the upper spaces with their closing devices, the bilge pipes and their suction strums, as well as the sounding pipes, are to be inspected. Hatches, doors, pipelines, thermometer tubes with their connections and fastenings, as well as watertight doors and air ducts, are to be checked. Cemented parts where brine might seep into the bilges are to be inspected with particular care.

— The insulation of all refrigerated cargo spaces, apparatus and piping are to be checked as to whether they are free from damages and dry, especially at positions where moisture may collect, e.g. in the bottom insulation underneath the hatches, underneath stringers and below decks.

— After repairs of the hold insulation, the Surveyor has to satisfy himself that no cooling air enters the insulation.

— The proper operation of dehydrators, thermometers and remote indicating thermometers is to be checked.

— The proper operation of air duct couplings for connecting refrigerated containers to the ship's own refrigerated installation has to be checked. Also, it is to be ascertained whether the air ducts are free from defects.

— The results of checks conducted on board may be considered.

9) **Additional items for oil tankers (Deck foam and inert gas systems; steering gear ; hull, machinery and equipment) :**

— checking the deck foam system, including the supplies of foam concentrate and testing that the minimum number of jets of water at the required pressure in the fire main is obtained,

— examining the inert gas system:

- examining externally for any sign of gas or effluent leakage;
- confirming the proper operation of both inert gas blowers;
- observing the operation of the scrubber-room ventilation system;

- checking the deck water seal for automatic filling and draining, and the arrangements for protecting the system against freezing;
- where a double block and bleed valve is installed, checking the automatic operations of the block and the bleed valves upon loss of power;
- where two shut-off valves in series with a venting valve in between are used as non-return devices, checking the automatic operation of the venting valve, and the alarm for faulty operation of the valves;
- examining the operation of all remotely operated or automatically controlled valves and, in particular, the flue gas isolating valves;
- observing a test of the interlocking feature of soot blowers;
- observing that the gas pressure regulating valve automatically closes when the inert gas blowers are secured;
- checking the means for separating the cargo tank not being inerted from the inert gas main;
- checking the alarms of the two oxygen sensors positioned in the space or spaces containing the inert gas system;
- checking, as far as practicable, the following alarms and safety devices of the inert gas system using simulated conditions where necessary:
  - high oxygen content of gas in the inert gas main;
  - low gas pressure in the inert gas main;
  - low pressure in the supply to the deck water seal;
  - high temperature of gas in the inert gas main;
  - low water pressure or low water-flow rate;
  - accuracy of portable and fixed oxygen-measuring equipment by means of calibration gas;
  - high water level in the scrubber;
  - failure of the inert gas blowers;
  - failure of the power supply to the automatic control system for the gas regulating valve and to the instrumentation for continuous indication and permanent recording of pressure and oxygen content in the inert gas main;
  - high pressure of gas in the inert gas main;

— checking, when practicable, the proper operation of the inert gas system on completion of the checks listed above

— examining the fixed firefighting system for the cargo pump rooms and confirming, as far as practicable and when appropriate, the operation of the remote means for closing the various openings;

— checking for all tankers, the provision of at least one portable instrument for measuring oxygen and one for measuring flammable vapour concentrations, together with a sufficient set of spares, and suitable means for the calibration of these instruments;

— examining the arrangements for gas measurement in double-hull spaces and double bottom spaces, including the fitting of permanent gas sampling lines, where appropriate

— examining, as far as possible, and testing the fixed hydrocarbon gas detection system

— checking protection of cargo pump room, and in particular:

— confirming, when appropriate, that the requisite arrangements to regain steering capability in the event of the prescribed single failure are being maintained;

— examining the cargo tank openings, including gaskets, covers, coamings and screens;

— examining the cargo tank pressure/vacuum valves and devices to prevent the passage of flame;

— examining the devices to prevent the passage of flame on vents to all bunker, oily-ballast and oily-slop tanks and void spaces, as far as practicable;

— examining the cargo tank venting, cargo tank purging and gas-freeing and other ventilation systems;

— examining the cargo, crude oil washing, ballast and stripping systems both on deck and in the cargo pump rooms and the bunker system on deck;

— confirming that all electrical equipment in dangerous zones is suitable for such locations, is in good condition and is being properly maintained;

— confirming that potential sources of ignition in or near the cargo pump room are eliminated, such as loose gear, combustible materials, etc., that there are no signs of undue leakage and that access ladders are in good condition;

— examining all pump room bulkheads for signs of oil leakage or fractures and, in particular, the sealing arrangements of all penetrations of cargo pump room bulkheads;

— examining, as far as practicable, the cargo, bilge, ballast and stripping pumps for undue gland seal leakage, verification of proper operation of electrical and mechanical remote operating and shutdown devices and operation of cargo pump room bilge system, and checking that pump foundations are intact;

— confirming that the pump room ventilation system is operational, ducting intact, dampers are operational and screens clean;

— verifying that installed pressure gauges on cargo discharge lines and level indicator systems are operational;

— examining access to bow arrangement;

— examining the towing arrangement for tankers of not less than 20,000 tonnes deadweight);

— confirming that the corrosion prevention system fitted to dedicated ballast water tanks of oil tankers and bulk carriers when appropriate is maintained;

— confirming that the coating system in cargo oil tanks of crude oil tankers, when appropriate, is maintained and that in-service maintenance and repair activities are recorded in the coating technical file;

— examining the emergency lighting in all cargo pump rooms of tankers constructed after 1 July 2002;

— examining, for oil tankers of 150 m in length and above, where appropriate, the ship's structure in accordance with the Ship Construction File, taking into account identified areas that need special attention and verifying that the Ship Construction File is updated, where applicable;

10) **Additional items for chemical tankers (Steering gear, structure, equipment, fittings, arrangements, and materials):**

— confirming, when appropriate, that the requisite arrangements to regain steering capability in the event of the prescribed single failure are being maintained;

— examining the cargo tank openings, including gaskets, covers, coamings and screens;

— examining the cargo tank pressure/vacuum valves and devices to prevent the passage of flame;

— examining the devices to prevent the passage of flame on vents to all bunker, oily-ballast and oily-slop tanks and void spaces, as far as practicable;

— examining the cargo tank venting, cargo tank purging and gas-freeing and other ventilation systems;

— examining the cargo, crude oil washing, ballast and stripping systems both on deck and in the cargo pump rooms and the bunker system on deck;

— confirming that all electrical equipment in dangerous zones is suitable for such locations, is in good condition and is being properly maintained;

— confirming that potential sources of ignition in or near the cargo pump room are eliminated, such as loose gear, combustible materials, etc., that there are no signs of undue leakage and that access ladders are in good condition;

— examining all pump room bulkheads for signs of oil leakage or fractures and, in particular, the sealing arrangements of all penetrations of cargo pump room bulkheads;

— examining, as far as practicable, the cargo, bilge, ballast and stripping pumps for undue gland seal leakage, verification of proper operation of electrical and mechanical remote operating and shutdown devices and operation of cargo pump room bilge system, and checking that pump foundations are intact;

— confirming that the pump room ventilation system is operational, ducting intact, dampers are operational and screens clean;

— verifying that installed pressure gauges on cargo discharge lines and level indicator systems are operational;

— examining access to bow arrangement;

— examining the towing arrangement for tankers of not less than 20,000 tonnes deadweight;

— confirming that the corrosion prevention system fitted to dedicated ballast water tanks of oil tankers and bulk carriers when appropriate is maintained;

— examining the emergency lighting in all cargo pump rooms of tankers constructed after 1 July 2002;

— confirming that wheelhouse doors and windows, side scuttles and windows in superstructure and deckhouse ends facing the cargo area are in a satisfactory condition;

— confirming that potential sources of ignition in or near the cargo pump room are eliminated, such as loose gear, combustible materials, etc., that there are no signs of undue leakage and that access ladders are in a satisfactory condition;

— confirming that removable pipe lengths or other approved equipment necessary for cargo separation are available in the pump room and are in a satisfactory condition;

— examining all pump room bulkheads for signs of cargo leakage or fractures and, in particular, the sealing arrangements of all penetrations of pump room bulkheads;

— confirming that the remote operation of the cargo pump bilge system is satisfactory;

— examining the bilge and ballast arrangements and confirming that pumps and pipelines are identified;

— confirming, when applicable, that the bow or stern loading and unloading arrangements are in order and testing the means of communication and the remote shut down for the cargo pumps;

— examining the cargo transfer arrangements and confirming that any hoses are suitable for their intended purpose and, where appropriate, type-approved or marked with date of testing;

— examining, when applicable, the cargo heating or cooling systems, including any sampling arrangements, and confirming that the means for measuring the temperature and associated alarms are operating satisfactorily;

— examining, as far as practicable, the cargo tank vent system, including the pressure/vacuum valves and secondary means to prevent over- or under-pressure and devices to prevent the passage of flame, and the arrangements of cargo tank purging with inert gas, as applicable;

— examining the gauging devices, high-level alarms and valves associated with overflow control;

— confirming that arrangements for sufficient gas to be carried or generated to compensate for normal losses, and that the means provided for monitoring ullage spaces, are satisfactory;

— confirming that arrangements are made for sufficient medium to be carried where drying agents are used on air inlets to cargo tanks;

— confirming that all electrical equipment in dangerous zones is suitable for such locations, is in satisfactory condition and has been properly maintained;

— examining the fixed firefighting system for the cargo pump room and the deck foam system for the cargo area and confirming that their means of operation are clearly marked;

— confirming that the condition of the portable fire extinguishing equipment for the cargoes to be carried in the cargo area is satisfactory;

— confirming that the system for continuous monitoring of the concentration of flammable vapours is satisfactory;

— examining, as far as practicable, and confirming the satisfactory operation of, the arrangements for the ventilation of spaces normally entered during cargo handling operations and other spaces in the cargo area;

— confirming, as far as practicable, that the intrinsically safe systems and circuits used for measurement, monitoring, control and communication purposes in all hazardous locations are being properly maintained;

— examining the equipment for personnel protection and in particular that:

- the protective clothing for crew engaged in loading and discharging operations and its stowage is in a satisfactory condition;
- the required safety equipment and associated breathing apparatus and associated air supplies and, when appropriate, emergency-escape respiratory and eye protection, are in a satisfactory condition and are properly stowed;
- medical first-aid equipment, including stretchers and oxygen resuscitation equipment are in a satisfactory condition;
- arrangements have been made for the antidotes for the cargoes actually carried to be on board;
- decontamination arrangements and eyewashes are operational;
- the required gas detection instruments are on board and arrangements have been made for the supply of the appropriate vapour detection tubes;
- the arrangements for the stowage of cargo samples are satisfactory;

— confirming that sampling points or detector heads are located in suitable positions in order that potentially dangerous leakages are readily detected;

11) **Additional items for gas carrier:**

— confirming, when appropriate, that the requisite arrangements to regain steering capability in the event of the prescribed single failure are being maintained;

— examining the cargo tank openings, including gaskets, covers, coamings and screens;

— examining the cargo tank pressure/vacuum valves and devices to prevent the passage of flame;

— examining the devices to prevent the passage of flame on vents to all bunker, oily-ballast and oily-slop tanks and void spaces, as far as practicable;

— examining the cargo tank venting, cargo tank purging and gas-freeing and other ventilation systems;

— confirming that all electrical equipment in dangerous zones is suitable for such locations, is in good condition and is being properly maintained;

— confirming that potential sources of ignition in or near the cargo pump room are eliminated, such as loose gear, combustible materials, etc., that there are no signs of undue leakage and that access ladders are in good condition;

— examining all pump room bulkheads for signs of oil leakage or fractures and, in particular, the sealing arrangements of all penetrations of cargo pump room bulkheads;

— examining, as far as practicable, the cargo, bilge, ballast and stripping pumps for undue gland seal leakage, verification of proper operation of electrical and mechanical remote operating and shutdown devices and operation of cargo pump room bilge system, and checking that pump foundations are intact;

— confirming that the pump room ventilation system is operational, ducting intact, dampers are operational and screens clean;

— verifying that installed pressure gauges on cargo discharge lines and level indicator systems are operational;

— examining access to bow arrangement;

— examining the towing arrangement for tankers of not less than 20,000 tonnes deadweight;

— confirming that the corrosion prevention system fitted to dedicated ballast water tanks of oil tankers and bulk carriers when appropriate is maintained;

— examining the emergency lighting in all cargo pump rooms of tankers constructed after 1 July 2002;

— confirming that any special arrangements to survive conditions of damage are in order;

— examining, where applicable, the alternative design and arrangements for the segregation of the cargo area, in accordance with the test, inspection and maintenance requirements, if any, specified in the approved documentation;

— confirming that the wheelhouse doors and windows, sidescuttles and windows in superstructure and deckhouse ends in the cargo area are in a satisfactory condition;

— examining the cargo machinery spaces and turret compartments, including their escape routes;

— confirming that the manually operated emergency shutdown system together with the automatic shutdown of the cargo pumps and compressors are satisfactory;

— examining the cargo control room;

— examining the gas detection arrangements for cargo control rooms and the measures taken to exclude ignition sources where such spaces are classified as hazardous areas;

— confirming the arrangements for the air locks are being properly maintained;

— examining, as far as practicable, the bilge, ballast and oil fuel arrangements;

— examining, when applicable, the bow or stern loading and unloading arrangements with particular reference to the electrical equipment, firefighting arrangements and means of communication between the cargo control room and the shore location;

— confirming that the sealing arrangements at the gas domes are satisfactory;

— confirming that portable or fixed drip trays or deck insulation for cargo leakage is in order;

— examining the cargo and process piping, including the expansion arrangements, insulation from the hull structure, pressure relief and drainage arrangements and water curtain protection as appropriate;

— confirming that the cargo tank and interbarrier space pressure and relief valves, including safety systems and alarms, are satisfactory;

— confirming that any liquid and vapour hoses are suitable for their intended purpose and, where appropriate, type-approved or marked with date of testing;

— examining the arrangements for the cargo pressure/temperature control including, when fitted, the thermal oxidation systems and any refrigeration system and confirming that any associated safety measures and alarms are satisfactory;

— examining the cargo, bunker, ballast and vent piping systems, including PRVs, vacuum relief valves, vent masts and protective screens, as far as practicable and confirming that the PRVs are type-approved or marked with date of testing;

— confirming that arrangements are made for sufficient inert gas to be carried to compensate for normal losses and that means are provided for monitoring the spaces;

— confirming that the use of inert gas has not increased beyond that needed to compensate for normal losses by examining records of inert gas usage;

— confirming that any air-drying system and any interbarrier and hold space purging inert gas system are satisfactory;

— confirming that electrical equipment in hazardous areas is in a satisfactory condition and is being properly maintained;

— examining the arrangements for the fire protection and fire extinction and testing the remote means of starting one main fire pump;

— examining the fixed fire-fighting system for the enclosed cargo machinery spaces, and the enclosed cargo motor room within the cargo area, and confirming that its means of operation is clearly marked;

— examining the water spray system for cooling, fire protection and crew protection and confirming that its means of operation is clearly marked;

— examining the dry chemical powder fire-extinguishing system for the cargo area and confirming that its means of operation is clearly marked;

— examining the appropriate fire-extinguishing system for the enclosed cargo machinery spaces for ships that are dedicated to the carriage of a restricted number of cargoes and the internal water spray system for the turret compartments and confirming their means of operation is clearly marked;

— examining, as far as practicable, and confirming the satisfactory operation of, the arrangements for the artificial ventilation of spaces in the cargo area normally entered during cargo handling operations;

— examining, and confirming the satisfactory operation of, the arrangements for the artificial ventilation of spaces normally entered other than those covered by confirming the provision and examining the disposition of the fire-fighters' outfits including their self-contained compressed air breathing apparatus, and the provision of two-way portable radiotelephone apparatus of an explosion-proof type or intrinsically safe;

— examining, and testing as appropriate and as far as practicable, the liquid level indicators, overflow control, pressure gauges, high pressure and, when applicable, low pressure alarms, and temperature indicating devices for the cargo tanks;

— examining, and testing as appropriate, the gas detection equipment.

12) **Additional items for container ship, container barge/pontoon, ships equipped for carriage of containers and ships equipped for carriage of ISO tank containers:**

— random examination of the accessible fixed cargo securing fittings located on exposed decks, container stanchions and lashing bridges.

— Verification of entries in the maintenance and inspection record book documenting the inspections and maintenance of fixed container securing fittings and loose lashing gear.

— Verification of origin/identity of fixed container securing fittings and loose lashing gear, against approved cargo securing manual on board.

— For the lashing software, it shall be checked that the operation manual is available on board and for reference see Rules for Stowage and Lashing of Containers (Pt.4, Vol.I) Sec.6

1.2 Intermediate Surveys

1.2.1 Schedule

1) The Intermediate Survey is to be carried out either at or between the second and third Annual Survey.

2) Those items which are additional to the requirements of the Annual Surveys may be surveyed either at or between the 2nd and 3rd Annual Survey.

3) A survey planning meeting is to be held prior to the commencement of the survey.

4) Concurrent crediting to both Intermediate Survey (IS) and Class Renewal Survey (SS) for surveys and thickness measurements of spaces are not acceptable.

1.2.2 Scope

The scope of the second or third Annual Survey is to be extended to include the following:

1) For ships between 5 and 10 years of age, a general, internal examination of representative ballast tanks is to be carried out. If there is no hard-protective coating, soft or semi-hard coating, or POOR coating condition, the examination is to be extended to other ballast tanks of the same type.

2) For ships over 10 years of age, a general, internal examination of all ballast tanks is to be carried out.

   A) If such examinations reveal no visible structural defects, the examination may be limited to a verification that the corrosion prevention system remains effective.

   B) For ballast tanks, excluding double bottom ballast tanks, if there is no hard-protective coating, soft or semi-hard coating, or POOR coating condition and it is not renewed, the tanks in question are to be internally examined at annual intervals.

   C) When such conditions are found in double bottom ballast tanks, the tanks in question may be internally examined at annual intervals.

3) In the case of dry cargo ships over 15 years old, other than bulk carriers or general dry cargo ships, an internal examination of selected cargo holds is to be carried out.

4) In the case of ships over 10 years of age, other than oil and chemical tankers with additional class notation **ESP**, liquefied gas carriers, and ships engaged in the carriage of dry cargoes only, an internal examination of selected cargo spaces is to be carried out.

5) Machinery and electrical installations

   A) The following measurements are to be performed and/or proved to have been performed by up to-date protocols:
      — crank web deflection, main engine(s)
      — crank web deflection, auxiliary diesel(s) (where relevant)
      — insulation resistance of generators and essential electrical motors, including cabling and switchgear

   B) Additionally, the following system components are to be subjected to operation tests:
      — emergency generating set, including emergency switchboard
      — emergency bilge valve
      — bilge, ventilation and monitoring systems for the carriage of dangerous goods
      — drainage facilities of starting-air and control-air receivers
      — general operational test of the machinery and electrical installations for furnishing proof of unrestricted operability, as indicated by the Surveyor

6) Refrigerating Installation

   A) As against the procedure outlined in 1.1.2.8), Survey to be extended in scope as follows.

B) Parts of compressors subject to wear, such as cylinders, pistons, piston rods, glands, bearings as well as parts of auxiliaries, such as shafts, impellers and diffusers of centrifugal pumps, etc., are to be inspected at random, unless the Surveyor considers a thorough examination to be necessary. The driving motors of compressors are to be inspected. Also, parts necessary for operation of the driving motors are included.

C) At the Surveyor's discretion, the end covers of some heat exchangers are to be removed for inspection of the tube plates and tubes.

7) Additional items for oil tankers (Piping systems and cargo tanks and electrical circuits in dangerous zones):

A) should there be any doubt as to its condition when examining the various piping systems, the piping may be required to be pressure tested, gauged or both. Particular attention is to be paid to repairs such as welded doublers;

B) testing the insulation resistance of electrical circuits in dangerous zones such as cargo pump rooms and areas adjacent to cargo tanks, but in cases where a proper record of testing is maintained, consideration should be given to accepting recent readings.

8) Additional items for chemical tankers (Steering gear, structure, equipment, fittings, arrangements, and materials):

A) examination of vent line drainage arrangements;

B) confirmation, where applicable, that pipelines and independent cargo tanks are electrically bonded to the hull;

C) generally examining the electrical equipment and cables in hazardous areas and zones such as cargo machinery spaces and areas adjacent to cargo tanks to check for defective equipment, fixtures and wiring. The insulation resistance of the circuits should be tested and in cases where a proper record of testing is maintained, consideration should be given to accepting recent readings;

9) Additional items for gas carrier (Steering gear, structure, equipment, fittings, arrangements, and materials):

A) confirming, where applicable, that pipelines and independent cargo tanks are electrically bonded to the hull;

B) generally examining the electrical equipment and cables in hazardous areas and zones such as cargo machinery spaces and areas adjacent to cargo tanks to check for defective equipment, fixtures and wiring.

The insulation resistance of the circuits should be tested and in cases where a proper record of testing is maintained consideration should be given to accepting recent readings;

C) confirming that the heating arrangements, if any, for steel structures are satisfactory;

1.3 Class Renewal Surveys

1.3.1 Schedule

1) Class Renewal Surveys are to be carried out at 5 years intervals to renew the Classification Certificate. Class Renewal surveys are numbered in the sequence I, II, III, IV, etc.

2) The first Class Renewal Survey is to be completed within 5 years from the date of the initial classification survey and thereafter 5 years from the credited date of the previous Class Renewal Survey. However, under "exceptional circumstances", BKI may grant an extension not exceeding three (3) months to allow for completion of the Class Renewal Survey provided that the vessel is attended and the attending Surveyor(s) so recommend(s) after the following has been carried out:

A) annual survey;

B) re-examination of Recommendations;

C) progression of the Class Renewal Survey as far as practicable;

D) in the case where dry docking is due prior to the end of the class extension, an underwater examination is to be carried out by an approved diving company. An underwater examination by an approved company may be dispensed with in the case of extension of dry-docking survey not exceeding 36 months interval provided the ship is without outstanding Recommendation regarding underwater parts.

In this case, the next period of class will start from the expiry date of the Class Renewal Survey before the extension was granted.

3) In the case that the Class Certificate will expire when the vessel is expected to be at sea, an extension to allow for completion of the Class Renewal Survey may be granted provided there is documented agreement to such an extension prior to the expiry date of the certificate, and provided that positive arrangements have been made for attendance of the Surveyor at the first port of call, and provided that BKI is satisfied that there is technical justification for such an extension. Such an extension is to be granted only until arrival at the first port of call after the expiry date of the certificate. However, if owing to "exceptional circumstances" the Class Renewal Survey cannot be completed at the first port of call, 1.3.1.2) may be followed, but the total period of extension shall in no case be longer than three months after the original due date of the Class Renewal Survey.

4) For surveys completed within 3 months before the expiry date of the Class Renewal Survey, the next period of class will start from the expiry date of the Class Renewal Survey. For surveys completed more than 3 months before the expiry date of the Class Renewal Survey, the period of class will start from the survey completion date.

5) In cases where the vessel has been laid up or has been out of service for a considerable period because of a major repair or modification and the owner elects to only carry out the overdue surveys, the next period of class will start from the expiry date of the Class Renewal Survey.

6) If the owner elects to carry out the next due Class Renewal Survey, the period of class will start from the survey completion date.

7) The Class Renewal Survey may be commenced at the 4th Annual Survey and be progressed with a view to completion by the 5th anniversary date. When the Class Renewal Survey is commenced prior to the 4th Annual Survey, the entire survey is to be completed within 15 months if such work is to be credited to the Class Renewal Survey.

8) A survey planning meeting is to be held prior to the commencement of the survey.

9) Concurrent crediting to both Intermediate Survey (IS) and Class Renewal Survey (SS) for surveys and thickness measurements of spaces are not acceptable.

1.3.2 Scope

1) The Class Renewal Survey is to include, in addition to the requirements of the Annual Survey, examination, tests and checks of sufficient extent to ensure that the hull, equipment and related piping, as required in 1.3.2.12), are in satisfactory condition and fit for the intended purpose for the new period of class of five years to be assigned, subject to proper maintenance and operation and the periodical surveys being carried out at the due dates.

2) The examinations of the hull are to be supplemented by testing and thickness measurements as required in 1.3.2.9) and 1.3.2.11), to ensure that the structural integrity remains effective. The aim of the examination is to discover Substantial Corrosion, significant deformation, fractures, damages or other structural deterioration, that may be present.

3) The Class Renewal Survey is to include examination of underwater parts per 1.6.

4) The anchors and chain cables are to be ranged, examined and the required complement and condition verified. The chain locker, holdfasts, hawse pipes and chain stoppers are to be examined and pumping arrangements of the chain locker tested.

   At Class Renewal Survey No. II and subsequent Class Renewal Surveys, chain cables are to gauge and renewed in cases where their mean diameter is worn below the limits allowed by BKI, see Annex A.3.

   The mean diameters of the anchor chain cables are to be determined by representative measurements, approx. 3 links per length of 27,5 m, made at the ends of the links where the greatest wear is occurred.

5) All spaces including holds and their 'tween decks where fitted; double bottom, deep, ballast, peak and cargo tanks; pump rooms, pipe tunnels, duct keels, machinery spaces, dry spaces, cofferdams and voids are to be internally examined including the plating and framing, bilges and drain wells, sounding, venting, pumping and drainage arrangements. Internal examination of fuel oil, lube oil and fresh water tanks is to be carried out in accordance with Table 3.3. At Class Renewal Survey No.3 and subsequent Class Renewal Surveys, structural downflooding ducts and structural ventilation ducts are to be internally examined.

6) Engine room structure is to be examined. Particular attention is to be given to tank tops, shell plating in way of tank tops, brackets connecting side shell frames and tank tops, and engine room bulkheads in way of tank top and bilge wells. Particular attention is to be given to the sea suctions, sea water cooling pipes and overboard discharge valves and their connections to the shell plating. Where wastage is evident or suspect, thickness measurements are to be carried out, and renewals or repairs made when wastage exceeds allowable limits.

7) Where provided, the condition of corrosion prevention system of ballast tanks is to be examined. For ballast tanks, excluding double bottom tanks, where a hard-protective coating is found in POOR condition and it is not renewed, where soft or semi-hard coating has been applied, or where a hard-protective coating was not applied from time of construction, the tanks in question are to be examined at annual intervals. Thickness measurements are to be carried out as deemed necessary by the surveyor.

8) When such breakdown of hard protective coating is found in double bottom ballast tanks and it is not renewed, where a soft or semi-hard coating has been applied, or where a hard-protective coating was not applied from the time of construction, the tanks in question may be examined at annual intervals. When considered necessary by the surveyor, or where extensive corrosion exists, thickness measurements are to be carried out.

9) Boundaries of double-bottom, deep, ballast, peak, and other tanks, including holds adapted for the carriage of salt water ballast, are to be tested with a head of liquid to the top of air pipes or to near the top of hatches for ballast/cargo holds.

   Boundaries of fuel oil, lube oil and fresh water tanks are to be tested with a head of liquid to the highest point that liquid will rise under service conditions.

   Tank testing of fuel oil, lube oil and fresh water tanks may be specially considered based on a satisfactory external examination of the tank boundaries, and a confirmation from the Master stating that the pressure testing has been carried out according to the requirements with satisfactory results. The Surveyor may extend the testing as deemed necessary.

10) Hatch Covers and Coamings

    The hatch covers and coamings are to be surveyed as follows:

A) A thorough inspection of the items listed in 1.1.2.5), including close-up survey of hatch cover plating and hatch coaming plating, is to be carried out. Subject to cargo hold hatch covers of approved design which structurally have no access to the internals, close-up survey shall be done of accessible parts of hatch covers structures.

B) Checking of the satisfactory operation of all mechanically operated hatch covers is to be made, including:

— stowage and securing in open condition;
— proper fit and efficiency of sealing in closed conditions;
— operational testing of hydraulic and power components, wires, chains and link drives.

C) Checking the effectiveness of sealing arrangements of all hatch covers by hose testing or equivalent is to be carried out.

11) Thickness measurements are to be carried out in accordance with Table 3.1. The Surveyor may extend the thickness measurements as deemed necessary. When thickness measurements indicate substantial corrosion, the extent of thickness measurements is to be increased to determine areas of substantial corrosion. Table 3.2 may be used as guidance for these additional thickness measurements. These extended thickness measurements are to be carried out before the survey is credited as completed.

12) All bilge and ballast piping systems are to be examined and operationally tested to working pressure to attending Surveyor's satisfaction to ensure that tightness and condition remain satisfactory.

13) For all ships except for passenger ships, automatic air pipe heads are to be completely examined (both externally and internally) as indicated in Table 3.4.

For designs where the inner parts cannot be properly inspected from outside, this is to include removal of the head from the air pipe. Particular attention is to be paid to the condition of the zinc coating in heads constructed from galvanised steel.

14) Refrigerating Installation

A) Apart from the surveys as detailed in 1.1.2.8) and 1.2.2.6), the following tests and inspections are to be carried out:

— examination of all parts of compressors and driving motors subject to wear, at the Surveyor's discretion, see D) below
— inspection of the primary installation for power supply of the refrigerating installation, as well as of the electrical installation
— inspection of the sea inlet and discharge valves for cooling water supply to the installation (possibly, within the scope of classification of the ship)
— internal inspection of the pressure vessels, as far as possible. The end covers of all heat exchangers are to be removed.
— tightness tests on condensers, evaporators, refrigerant and brine pipes. Pipe coils (air coolers) in the primary/secondary refrigerating system are to be inspected, removed at the Surveyor's discretion and/or subjected to a hydraulic pressure test.

B) In the case of new installations the above mentioned tightness tests, as well as the removal of parts of the piping insulation and dismounting of pipe coils, may be dispensed with at the time of the first Class Renewal Survey, at the Surveyor's discretion.

C) Hydraulic pressure tests on pressure vessels are to be carried out for the first time 10 years after initial operation, and subsequently, on the occasion of each Class Renewal. In the case of pressure vessels operated with refrigerants in closed circuit, the periodical hydraulic pressure tests may be dispensed with.

D) Where screw compressors or semi hermetic piston compressors are fitted, for which manufacturers have prescribed fixed intervals for maintenance or replacements, BKI may on request agree to differing intervals between surveys, provided that the compressors are equipped with reliable working-hour meters and that a sufficient number of units ready for installation or of complete rotor runner sets is available on board.

A supplementary sheet or the Appendix to the Refrigerating Installation Certificate contains more detailed information as to whether such surveys will be accepted.

15) Survey of Watertight Cable Transits

A) These requirements apply to all vessels having GT $\geq$ 500 operating on international voyages contracted for construction on or after 1st July 2021. A cable Transit Seal Systems Register is to be provided by the shipbuilder for all watertight cable transits fitted to the vessel.

B) The requirements for Class Renewal Survey may be undertaken by the attending Surveyor or by a firm approved as a service supplier according to Rules for Approval of Manufacturers and Service Suppliers (Pt.1, Vol.XI).

C) All transits are to be examined to confirm their satisfactory condition and the Register is to be reviewed to confirm it is being maintained. The Class Renewal Survey is to be recorded in the Register, in which a single record entry will be sufficient to record the survey of all transits.

D) From review of the Register, where there are records entered since the last Class Renewal Survey of any disruption to the cable transits or installation of new cable transits (except which are reviewed and examined at previous annual surveys), the satisfactory condition of those transits is to be confirmed by the attending Surveyor by review of records and examination of the transits; the results are to be recorded in the Register against each of those cable transits.

E) In case the cable transits have been examined by an approved service supplier, the attending surveyor is to review the Register in order to ascertain that it has been properly maintained by the owner and correctly endorsed by the service supplier.

16) Survey of towing winch emergency release systems

A) The full functionality of the emergency release system is to be tested to the satisfaction. Testing may be conducted either during a bollard pull test or by applying the load against a strong point on the deck of the tug or the shore that is certified to the appropriate load.

B) The emergency release system is to be tested at a towline load that is equal to the lesser of 30% of the maximum design load or 80% of vessel bollard pull in both a normal power condition and power blackout condition to the satisfaction.

17) Survey of container ship, container barge/pontoon, ships equipped for the carriage of container, and ships equipped for the carriage of ISO tank container:

A) Fixed container securing fittings with their supporting structures with respect to cracks, deformations and thickness diminution of:

— Cell guides including supports and connection of guide heads to top ends
— container stanchions and racks on deck and in holds
— securing supports and lashing fittings welded to inner bottom, container steps, stanchions, hatch covers, lashing bridges, etc.

B) Hatch covers:

— Supports and stoppers with respect to condition and operability
— guide rails and supporting frames including connection to hull with respect to cracks and deformations.

C) Portable (loose) container securing equipment:

— Random examination for damage
— Verification of product certificates kept in ship's files confirming that defective equipment has been replaced by equivalent and compatible parts
— Verification that equipment not in use is collected and stored in appropriate bins, for Pontoon or Barges as far as practicable.

D) Lashing Software:

— checking that the operation manual is available on board.
— checking and verification of the operation manual is to be done in the presence of a surveyor and for reference see Rules for Lashing and Stowage Containers (Pt.4, Vol.I) Sec.6.

18) Survey of ships with arrangement for pushing or being pushed, the following shall be examined:

— connecting points and contact areas with supporting structure
— connecting equipment including locking device if any.

Table 3.1 Minimum Requirements for Thickness Measurements at Class Renewal Survey

Class Renewal Survey No. I **Age ≤ 5**	**Class Renewal Survey No. II** **5 < Age ≤ 10**	**Class Renewal Survey No. III** **10 < Age ≤ 15**	**Class Renewal Survey No. IV and Subsequent** **15 < Age**
1) Suspect areas throughout the vessel.	1) Suspect areas throughout the vessel.	1) Suspect areas throughout the vessel.	1) Suspect areas throughout the vessel.
	2) One transverse section of deck plating within the amidships 0,5**L** (in way of a cargo space, if available)	2) Two transverse sections within the amidships 0,5**L** (in way of two cargo spaces if applicable).	2) A minimum of three transverse sections within the amidships 0,5**L**. (in way of cargo spaces, if applicable)
		3) All cargo hold hatch covers and coamings (plating and stiffeners).	3) All cargo hold hatch covers and coamings (plating and stiffeners).
		4) Internals in forepeak and afterpeak ballast tanks.	4) Internals in forepeak and afterpeak ballast tanks.
			5) All exposed main deck plating full length.
			6) Representative exposed superstructure deck plating (poop, bridge, and forecastle deck).
			7) Lowest strake and strakes in way of 'tween decks of all transverse bulkheads in cargo spaces together with internals in way.
			8) All wind and water strakes, port and starboard, full length.
			9) All keel plates full length. Also, additional bottom plates in way of cofferdams, machinery space, and aft end of tanks.
			10)Plating of seachests. Shell plating in way of overboard discharges as considered necessary by the attending surveyor.

Notes:

1. *Thickness measurement locations are to be selected to provide the best representative sampling of areas likely to be most exposed to corrosion, considering cargo and ballast history and arrangement and condition of protective coatings.*
2. *Thickness measurements of internals may be specially considered by the Surveyor if the hard-protective coating is in GOOD condition.*
3. *For ships less than 100 m in length, the number of transverse sections required at Class Renewal Survey No. III may be reduced to one (1), and the number of transverse sections required at Subsequent Class Renewal Surveys may be reduced to two (2).*
4. *For ships more than 100 m in length, at Class Renewal Survey No. III, thickness measurements of exposed deck plating within amidship 0,5**L** may be required.*
5. *Subject to cargo hold hatch covers of approved design which structurally have no access to the internals, thickness measurement shall be done of accessible parts of hatch covers structures.*

Table 3.2 Guidance for Additional Thickness Measurements in Way of Substantial Corrosion

STRUCTURAL MEMBER	EXTENT OF MEASUREMENT	PATTERN OF MEASUREMENT
Plating	Suspect area and adjacent places.	5 point pattern over 1 m^2.
Stiffeners	Suspect area.	3 measurements each in line across web and flange.

Table 3.3 Minimum Requirements for Internal Examination at Hull Class Renewal Surveys of Fuel Oil, Lube Oil and Fresh Water Tanks

Tank	Class Renewal Survey No. I Age ≤ 5	Class Renewal Survey No. II 5 < Age ≤ 10	Class Renewal Survey No. III 10 < Age ≤ 15	Class Renewal Survey No. IV and Subsequent 15 < Age
Fuel Oil Bunker tanks - Engine Room - Cargo Length Area - If no tanks in Cargo Length Area, additional fuel tank(s) outside of Engine Room (if fitted)	 None None None	 None One One	 One Two One	 One Half, minimum 2 Two
Lube Oil	None	None	None	One
Fresh Water	None	One	All	All

Notes:
1) These requirements apply to tanks of integral (structural) type.
2) If a selection of tanks is accepted to be examined, then different tanks are to be examined at each Class Renewal Survey, on a rotational basis.
3) Peak tanks (all uses) are subject to internal examination at each Class Renewal Survey.
4) At Class Renewal Surveys no. III and subsequent surveys, one deep tank for fuel oil in the cargo length area is to be included, if fitted.

Table 3.4 Survey Requirements for Automatic Pipe Heads at Class Renewal Surveys

Class Renewal Survey No. I Age ≤ 5	Class Renewal Survey No. II 5 < Age ≤ 10	Class Renewal Survey No. III and Subsequent Age > 10
– Two air pipe heads, one port and one starboard, located on the exposed decks in the forward 0,25**L**, preferably air pipes serving ballast tanks. – Two air pipe heads, one port and one starboard, on exposed decks, serving spaced aft of 0,25**L**, preferably air pipes serving ballast tanks. (1) (2)	– All air pipe heads located on the exposed decks in the forward 0,25**L**. – At least 20% of air pipe heads on the exposed decks serving spaces aft of 0,25**L**, preferably air pipes serving ballast tanks (1) (2)	All air pipe heads located on the exposed decks (3)

(1) The selection of air pipe heads to be examined is left to the attending Surveyor.
(2) According to the results of this examination, the Surveyor may require the examination of other heads located on the exposed decks.
(3) Exemption may be considered for air pipe heads where there is substantial evidence of replacement after the last Class Renewal Survey.

1.3.3 Continuous Class Renewal Surveys

.1 Continuous Class Renewal Survey may be requested separately for the hull, the machinery and the special equipment.

.2 These following requirements are not applicable for Single or double skin Oil Tankers, Single or double skin Bulk Carriers, Chemical Tankers and General dry cargo ship.

1) The complete survey of the hull to meet the requirements of the Hull Class Renewal Survey, can be carried out on the Continuous Survey System basis, when, at request of an owner it has been agreed by BKI [2].

2) When such a system is adopted all the requirements of the particular Hull Class Renewal Survey must be completed at the end of the five-year class period.

3) During each survey cycle, all items are to be surveyed (and tested, where required) in regular rotation, as far as practicable, with uniform annual share within the five-years class period.

4) The owner is entitled to fix the sequence in which the individual items of the hull are intended to be surveyed. However, the sequence in each survey cycle shall be linked with that of the previous one in such a way that the interval between consecutive (in two cycles) examinations of each item should not generally exceed five years. The survey in dry-dock may be held at any time within the five-year class period, provided all the requirements of 1.6 are also complied with.

5) For ships more than 10 years of age, the ballast tanks are to be internally examined twice in each five-year class period, i.e. Once within the scope of the intermediate survey and once within the scope of the continuous system for the hull Class Renewal Survey.

6) The surveyor may extend the inspection at his discretion, to other items if the inspections carried out revealed any defects.

7) The agreement for surveys to be carried out on a Continuous Survey System basis may be withdrawn at discretion of BKI concerned.

.3 Continuous Machinery Survey (CMS) is a survey arrangement where the components in the machinery list established for the ship are subject to separate surveys with intervals not exceeding five (5) years.

1.3.4 Surveys based on Planned Maintenance Systems

1) General

   A) Application

      a) These requirements apply to an approved Planned Maintenance Scheme for Machinery (PMS) as an alternative to the Continuous Machinery Survey (CMS).
      b) It considers surveys to be carried out on the basis of intervals between overhauls recommended by manufacturers, documented operator's experience and a condition monitoring system, where fitted.
      c) This scheme is limited to components and systems covered by CMS.
      d) Any items not covered by PMS shall be surveyed and credited in the usual way.

   B) Maintenance Intervals

      In general, the intervals for PMS shall not exceed those specified for CMS. However, for components where the maintenance is based on running hours longer intervals may be accepted as long as the intervals are based on the manufacturer's recommendations.

[2] Ships on the Continuous Survey System are not exempt from other periodical surveys.

C) Onboard responsibility

a) The chief engineer shall be the responsible person on board in charge of the PMS.

b) Documentation on overhauls of items covered by the PMS shall be reported and signed by the chief engineer.

c) Access to computerized systems for updating of the maintenance documentation and maintenance program shall only be permitted by the chief engineer or other authorized person.

2) Procedures and conditions for approval of a PMS

A) System Requirements

a) The PMS shall be programmed and maintained by a computerized system. However, this may not be applied to the current already approved schemes.

b) The system shall be approved by BKI.

c) Computerized systems shall include back-up devices, such as disks/tapes, CDs, which are to be updated at regular intervals.

B) Documentation and information

a) The following documentation shall be submitted for the approval of the scheme:

i) organization chart identifying areas of responsibility;

ii) documentation filling procedures;

iii) listing of equipment to be considered by classification in PMS;

iv) machinery identification procedure;

v) preventive maintenance sheet(s) for each machine to be considered;

vi) listing and schedule of preventive maintenance procedures.

b) In addition to the above documentation the following information shall be available on board:

i) all clauses in B).a) above in an up-to-date fashion;

ii) maintenance instructions (manufacturer's and shipyard's);

iii) reference documentation (trend investigation procedures, etc.),

iv) records of maintenance including repairs and renewals carried out

C) Approval validity

a) When the PMS is approved a "Certificate of Approval for Planned Maintenance Scheme" is issued. However, other equivalent certification or class notation may be issued according to the procedure in use. In any case, the certification is to be kept on board.

b) An implementation Survey shall be carried out to confirm the validity of the certificate/class notation, see 3).A).

c) An annual report covering the year's service including the information as required under the clauses iii) and v) as well as the information on changes to other clauses in 2).B).a) above, shall be reviewed by BKI.

D) An Annual Audit shall be carried out to maintain the validity of the PMS, see 3).B) below.

E) The survey arrangement for machinery under PMS can be cancelled by BKI if PMS is not being satisfactorily carried out either from the maintenance records or the general condition of the machinery, or when the agreed intervals between overhauls are exceeded.

F) The case of sale or change of management of the ship or transfer of class shall cause the approval to be reconsidered.

G) The ship-owner may, at any time, cancel the survey arrangement for machinery under PMS by informing BKI in writing and for this case the items which have been inspected under the PMS since the last annual survey can be credited for class at the discretion of the attending surveyor.

3) Surveys

A) Implementation Survey

a) The Implementation Survey shall be carried out by BKI's surveyor within one year from the date of approval of the PMS.

b) During the implementation survey the following shall be verified by a surveyor to ensure:

i) the PMS is implemented according to the approval documentation and is adapted to the type and complexity of the components/system on board;

ii) the PMS is producing the documentation required for the Annual Audit and the requirements of surveys and testing for retention of class are complied with;

iii) the onboard personnel are familiar with the PMS.

c) When this survey is carried out and the implementation is found in order, a report describing the PMS shall be submitted to BKI and the approved PMS may replace the CMS.

B) Annual Audit[3)]

a) An annual audit of the PMS shall be carried out by BKI's surveyor and preferably concurrently with the annual survey of machinery.

b) The surveyor shall review the annual report or verify that it has been reviewed by BKI.

c) The purpose of this survey shall be to verify that the scheme is being correctly operated and that the machinery has been functioning satisfactorily since the previous survey. A general examination of the items concerned shall be carried out.

d) The performance and maintenance records shall be examined to verify that the machinery has functioned satisfactorily since the previous survey or action has been taken in response to machinery operating parameters exceeding acceptable tolerances and the overhaul intervals have been maintained.

e) Written details of break-down or malfunction shall be made available.

f) Description of repairs carried out shall be examined. Any machinery part, which has been replaced by a spare one, due to damage, is to be retained on board — where possible — until examined by BKI's Surveyor.

g) Upon satisfactory completion of the above requirements, BKI shall retain the PMS.

C) Damage and repairs

a) The damage of components/machinery shall be reported to BKI. The repairs of such damaged components / machinery shall be carried out to the satisfaction of BKI's surveyor.

b) Any repair and corrective action regarding machinery under PMS system shall be recorded in the PMS logbook and repair verified by BKI's surveyor at the Annual Audit.

c) In the case of overdue outstanding recommendations or a record of unrepaired damage which would affect the PMS the relevant items shall be kept out of the PMS until the condition of class is fulfilled or the repair is carried out.

1.3.5 Surveys based on Condition Monitoring Systems

1) General

A) Application

a) These requirements apply to the approved Condition Monitoring (CM) and Condition Based Maintenance (CBM) schemes where the condition monitoring results are used to influence the scope and/or frequency of Class survey.

b) This scheme may be applied to components and systems covered by Continuous Machinery Survey (CMS), and other components and systems as requested by the owner. The extent of Condition Based Maintenance and associated monitoring equipment to be included in the maintenance scheme is decided by the Owner.

[3)] The term audit, in this context, is not related to ISM audit.

c) These requirements can be applied only to vessels operating on approved PMS survey scheme.

d) The scheme may be applied to any individual items and systems. Any items not covered by the scheme shall be surveyed and credited in accordance with the requirements of B.1.5 and / or B.1.3.4.

B) Definitions

a) The following standard terms are defined as follows[4)]:

i) Condition monitoring: acquisition and processing of information and data that indicate the state of a machine over time. The machine state deteriorates if faults or failures occur.

ii) Diagnostic: examination of symptoms and syndromes to determine the nature of faults or failures.

iii) Condition Based Maintenance: maintenance performed as governed by condition monitoring programmes.

C) Condition Monitoring (CM)

a) Where an approved condition monitoring system is fitted, credit for survey may be based on acceptable condition monitoring results. The condition monitoring results are to be reviewed during the annual audit.

b) Limiting parameters are to be based on the Original Equipment Manufacturers guidelines (OEM), or a recognised international standard.

c) The condition monitoring system is to provide an equivalent or greater degree of confidence in the condition of the machinery to traditional survey techniques.

d) The condition monitoring system shall be approved in accordance with each Member Society's procedures.

e) A condition monitoring system may be used to provide a greater understanding of equipment condition, and a condition based maintenance scheme may be used to obtain maintenance efficiency. Class approval is required where owners wish to change the survey cycle based on CM/CBM.

f) Software systems can use complex algorithms, machine learning and knowledge of global equipment populations/defect data in order to identify acceptability for continued service or the requirement for maintenance. These systems may be independent of the OEM recommended maintenance and condition monitoring suggested limits. Approval of this type of software is to be based on OEM recommendations, industry standards and Class Society experience.

g) The Society retains the right to test or open-up the machinery, irrespective of the CM results, if deemed necessary.

D) Condition Based Maintenance (CBM)

a) Where an owner wishes to base their equipment maintenance on a CBM approach, this is to meet the requirements of the ISM Code.

b) Where an agreed planned maintenance and CBM scheme is in operation, the CMS and other survey intervals may be extended based on OEM maintenance recommendations and acceptable condition monitoring results.

c) Limiting parameters (alarms and warnings) are to be based on the OEM guidelines, or a recognised international standard.

d) The CBM scheme is to provide an equivalent or greater degree of confidence in the condition of the machinery to traditional maintenance techniques.

e) The scheme shall be approved in accordance with each Member Society's procedures.

[4)] See ISO 13372 : 2012

f) Software systems can use complex algorithms, machine learning and knowledge of global equipment populations/defect data in order to identify acceptability for continued service or the requirement for maintenance. These systems may be independent of the OEM recommended maintenance and condition monitoring suggested limits. Approval of this type of software is to be based on OEM recommendations, industry standards and Class Society experience.

2) Procedures and Conditions for approval of CM and CBM

A) Onboard Responsibility

a) The chief engineer shall be the responsible person on board in charge of the CM and CBM.

b) Documentation on the overhaul of items covered by CM and CBM schemes shall be reported by the chief engineer.

c) Access to computerized systems for updating of the maintenance documentation and maintenance program shall only be permitted by the chief engineer or other authorized person.

d) All personnel involved in CM and CBM shall be appropriately qualified.

Note:

CM does not replace routine surveillance or the chief engineer's responsibility for taking decisions in accordance with his judgement.

B) Equipment and System Requirements

a) CM equipment and systems shall be approved in accordance with a procedure of each individual Member Society.

b) The CM/CBM scheme and its extent, are to be approved by the Society.

c) The CBM scheme is to be capable of producing a condition report, and maintenance recommendations.

d) A system is to be provided to identify where limiting parameters (alarms and warnings) are modified during the operation of the scheme.

e) Where CM and CBM schemes use remote monitoring and diagnosis (i.e. data is transferred from the vessel and analysed remotely), the system is to meet the applicable standards for Cyber Safety and Security. The system shall be capable of continued onboard operation in the event of loss of the communication function.

f) CBM schemes are to identify defects and unexpected failures that were not prevented by the CM system.

g) Systems shall include a method of backing up data at regular intervals.

C) Documentation and Information

a) The following documentation shall be made available to the Society for the approval of the scheme:

i) Procedure for changes to software system and CM parameters

ii) Listing of equipment to be included in the scheme

iii) Listing of acceptable condition monitoring parameters

iv) Description of CBM scheme

v) Listing, specifications and maintenance procedures for condition monitoring equipment

vi) Baseline data for equipment with condition monitoring

vii) Qualification of personnel and company responsible for analysing CM results

b) In addition to the above documentation the following information shall be available on board:

i) All clauses in 2).C).a) in an up-to-date fashion

ii) Maintenance instructions (manufacturer's and shipyard's)
iii) Condition monitoring data including all data since last opening of the machine and the original base line data
iv) Reference documentation (trend investigation procedures etc.)
v) Records of maintenance including repairs and renewals carried out
vi) Records of changes to software systems and parameters
vii) Sensors calibration records / certification / status

D) Approval validity
a) An Annual Audit shall be carried out to maintain the validity of the CM/CBM scheme.
b) The survey arrangement for machinery under CM/CBM can be cancelled by the Society if the scheme is not being satisfactorily carried out either from the maintenance records or the general condition of the machinery.
c) The case of sale or change of management of the ship or transfer of class shall cause the approval to be reconsidered.
d) The ship owner may, at any time, cancel the survey arrangement for machinery under the scheme by informing the Society in writing and for this case the items which have been inspected under the scheme since the last annual Audit can be credited for class at the discretion of the attending surveyor.

3) Surveys

A) Installation Survey
a) Condition monitoring equipment is to be installed and surveyed in accordance with class society rules, and a set of base line readings is to be taken.

B) Implementation Survey
a) The Implementation Survey shall be carried out by the Society's surveyor no earlier than 6 months after installation survey and no later than the first Class annual survey.
b) During the Implementation survey the following shall be verified by a surveyor:
i) the CM/CBM scheme is implemented according to the approval documentation, including a comparison with baseline data;
ii) the scheme is producing the documentation required for the Annual Audit and the requirements of surveys and testing for the maintenance of class are complied with;
iii) the onboard personnel are familiar with operating the scheme.
iv) records of any limiting parameters (alarms and warnings) that have been modified during the operation of the scheme.
v) Records of any failures of monitored equipment are to be reviewed to ensure that the condition monitoring scheme is effective / sufficient.
c) When this survey is carried out and the implementation is found in order, a report describing the scheme shall be submitted to the Society and the scheme may be put into service.

C) Annual Audit
a) An annual audit of the CM and CBM scheme shall be carried out by a Society's surveyor concurrently with the Class annual survey.
b) The purpose of this audit shall be to verify that the scheme is being correctly operated and that the machinery has been functioning satisfactorily since the previous audit. This is to include any limiting parameters (alarms and warnings) that have been modified since the last audit. A general examination of the items concerned shall be carried out.
c) The performance, condition monitoring and maintenance records shall be examined to verify that the machinery has functioned satisfactorily since the previous survey, or action has been taken in response to machinery operating parameters exceeding acceptable tolerances.

d) Written details of break-down or malfunction shall be made available.

e) At the discretion of the surveyor, function tests, confirmatory surveys and random check readings, where Condition Monitoring / Condition Based Maintenance equipment is in use, shall be carried out as far as practicable and reasonable.

f) The familiarity of the chief engineer and other personnel involved with the CM system shall be verified.

g) Calibration status of sensors and equipment shall be verified.

h) Verification that the suitability of the CM/CBM scheme has been reviewed following defects and failures shall be carried out.

D) Damage and repairs

a) Damage to components or items of machinery is to be reported to the Society. The repairs of such damaged components or items of machinery are to be carried out to the satisfaction of the Surveyor.

b) Details of repairs and maintenance carried out shall be examined. Any machinery part, which has been replaced by a spare one, due to damage, is to be retained on board where possible until examined by the Society's Surveyor.

c) Defect and failure data is to be reviewed in order to ensure the system output is appropriate. Where necessary, following review of the failure data, there is to be a method of amending the CM and CBM scheme.

1.3.6 Requirements for Ships not Applying Planned Maintenance Systems, Condition Monitoring Systems and/or Continuous Machinery Survey

1) Inspection of machinery items in this section uses 2 (two) inspection methods as follows:

A) Method 1: Visual inspection by opening up fully or partly as deemed necessary by the surveyor. Function testing and or pressure testing shall be carried out when relevant.

B) Method 2: Examine visually without dismantling. Performance test shall be carried out. Open up if deemed necessary. Verify last overhaul.

2) List of machinery items that shall be examined is indicated below (Table 3.5):

Table 3.5 Table of Machinery Items Examination

Systems	Components	Examination method
Propulsion systems	Propulsion drivers: diesel engines	1
	Propulsion drivers: steam turbines	1
	Propulsion drivers: gas turbines	See Notes 6
	Propulsion drivers: electric power units (electric motors and frequency converters) and hydraulic motors	2
	Thrust shafts, intermediate shafts, shaft bearings, clutches, couplings and vibration dampers (torsional and axial)	2
	Gears: Shafts, pinions, wheels, power take offs, power take ins	2
	Controllable pitch propeller servo mechanism	2
	Controllable pitch propeller hydraulic power system	2
Main and emergency electric power systems	Generator drivers: diesel engines	1
	Generator drivers: steam turbines	1
	Generator drivers: gas turbines	See Notes 6
	Generators	2
	Shafts, clutches, couplings and vibration dampers (torsional and axial)	2
	Gears: Shafts, pinions, wheels, power take offs, power take ins	2
Feed water, steam and condensate systems	Heat exchangers	1
	Pipes, valves and filters inside machinery space	2
	Pumps	2
	Pump drivers: electric motors	2
	Pump drivers: steam turbines	1
	Condensers	1
	Fresh water generators (only for steam turbine propulsion)	1
Fuel[1,2] and lubrication oil systems	Heat exchangers	1
	Pipes, valves, filters, pumps and pump drivers	2
Incineration system	Incinerator	1
Sea water systems	Pumps and heat exchangers	1
	Pipes, valves, filters and pump drivers	2
Fresh water systems	Heat exchangers	1
	Pipes, valves, filters, pumps and pump drivers	2
Bilge systems	Pumps and ejectors	1
	Pipes, valves and filters inside machinery space, and pump drivers	2
Compressed air systems	Compressors	2
	Air receivers	1
	Pipes, valves and filters inside machinery space	2
Exhaust gas NOx and SOx cleaning systems, treatment fluid circuits	Pipes, valves, filters, pumps and pump drivers[3]	2
Exhaust gas system[4]	Fans and fan drivers	1

Table 3.5: Table of Machinery Items Examination *(continued)*

Systems	Components	Examination method
Inert gas system[5] Cargo piping system Cargo tanks cleaning system Cargo refrigeration system Cargo regasification system Cargo reliquefaction system	Pumps and fans	2
	Compressors	1
	Pump, fan and compressor drivers: diesel engines and steam turbines	1
	Pump, fan and compressor drivers: electric and hydraulic motors	2
	Pump, fan and compressor drivers hydraulic power systems	2
	Heat exchangers, scrubbers and vaporizers	1
	Pipes, valves and filters	2

Notes :

1. *Independent of the type of fuel; fuel oil, fuel gas, low flashpoint liquid, etc*
2. *Where necessary, insulation material shall be dismantled to facilitate inspection.*
3. *The sides of non-return valves, and pumps exposed to fluids having corrosive or etching properties shall be surveyed according to method 1.*
4. *Function test of fan only.*
5. *Independent of the type of inert gas or purpose, except for fire fighting purposes.*
6. *For ships with gas turbine installations the survey shall include verification of records and general overhaul reports onboard.*
   General Overhaul on gas turbines shall be performed by either the original equipment manufacturer (OEM) or an OEM authorized company.

1.3.7 Class Extension Survey

See 1.3.1 and 1.6.1.2).

1.4 Periodical surveys of propeller shafts and tube shafts, propellers, vane wheels and other systems

For maintenance of the Class, periodical surveys and tests of propeller shafts and tube shafts, propellers, vane wheels and other systems of seagoing ships are to be carried out.

1.4.1 Propeller shafts and tube shafts

Unless alternative means are provided to assure the condition of the propeller shaft assembly, these requirements apply to all vessels with conventional shafting fitted with a propeller as follows:

— from 1 January 2016 for ships delivered on or after 1 January 2016;

— after the first shaft survey scheduled on or after 1 January 2016, for ships delivered before 1 January 2016.

1) Oil lubricated shafts

   A) Survey intervals (see Table 3.6)

      For surveys completed within 3 months before the shaft survey due date, the next period will start from the shaft survey due date.

      a) Flanged propeller connection

         The following Methods are applicable:

         i) Method 1 every 5 years, or

ii) Method 2 every 5 years (pre- requisites have to be fulfilled), or
iii) Method 3 every 5 years (pre-requisites have to be fulfilled).

b) Keyless propeller connection

The following Methods are applicable:

i) Method 1 every 5 years, or
ii) Method 2 every 5 years (pre- requisites have to be fulfilled), or
iii) Method 3 every 5 years (pre-requisites have to be fulfilled). The maximum interval between two surveys carried out according to Method 1 or Method 2 shall not exceed 15 years, except in the case when one extension for no more than three months is granted.

c) Keyed propeller connection

The following Methods are applicable:

i) Method 1 every 5 years, or
ii) Method 2 every 5 years (pre- requisites have to be fulfilled)

B) Survey extensions (see Table 3.6)

For all types of propeller connections, the interval between two consecutive surveys may be extended after the execution of extension survey as follows:

a) Extension up to a maximum of 2,5 years: no more than one extension can be granted. No further extension, of other type, can be granted.
b) Extension up to a maximum of 1 year: no more than two consecutive "one year extensions" can be granted. No further extension, of other type, can be granted.

In the event an additional extension is requested, the requirements of the "2,5 year extension" are to be carried out and the shaft survey due date, prior to the previous extension(s), is extended for a maximum of 2,5 years.

c) Extension up to a maximum of 3 months: no more than one "three months extension" can be granted. In the event an additional extension is requested, the requirements of the "one year extension" or "2,5 years extension" are to be carried out and the shaft survey due date, prior to the previous extension, is extended for a maximum of one year or 2,5 years.

The extension survey should normally be carried out within 1 month of the shaft survey due date and the extension counts from the shaft survey due date.

If the extension survey is carried out more than 1 month prior to the shaft survey due date, then the period of extension counts from the date of the extension survey was completed

2) Closed loop system fresh water lubricated shafts

The maximum interval between two surveys carried out according to Method 1 shall not exceed 15 years. An extension for no more than three months can be granted.

A) Survey intervals (see Table 3.6)

For surveys completed within 3 months before the shaft survey due date, the next period will start from the shaft survey due date.

a) Flanged propeller connection

The following Methods are applicable:

i) Method 1 every 5 years, or
ii) Method 2 every 5 years (pre- requisites have to be fulfilled), or
iii) Method 3 every 5 years (pre-requisites have to be fulfilled).

b) Keyless propeller connection

The following Methods are applicable:

i) Method 1 every 5 years, or

ii) Method 2 every 5 years (pre- requisites have to be fulfilled), or

iii) Method 3 every 5 years (pre-requisites have to be fulfilled).

c) Keyed propeller connection

The following Methods are applicable:

i) Method 1 every 5 years, or

ii) Method 2 every 5 years (pre- requisites have to be fulfilled)

B) Survey extensions (see Table 3.6)

For all types of propeller connections, the interval between two consecutive surveys may be extended after the execution of extension survey as follows:

a) Extension up to a maximum of 2,5 years: no more than one extension can be granted. No further extension, of other type, can be granted.

b) Extension up to a maximum of 1 year: no more than two consecutive "one year extensions" can be granted. No further extension, of other type, can be granted.

In the event an additional extension is requested, the requirements of the "2,5 year extension" are to be carried out and the shaft survey due date, prior to the previous extension(s), is extended for a maximum of 2,5 years.

c) Extension up to a maximum of 3 months: no more than one "three months extension" can be granted. In the event an additional extension is requested, the requirements of the "one year extension" or "2,5 years extension" are to be carried out and the shaft survey due date, prior to the previous extension, is extended for a maximum of one year or 2,5 years.

The extension survey should normally be carried out within 1 month of the shaft survey due date and the extension counts from the shaft survey due date.

If the extension survey is carried out more than 1 month prior to the shaft survey due date, then the period of extension counts from the date of the extension survey was completed

The maximum interval between two surveys carried out according to Method 1 shall not exceed 15 years, except in the case when one extension for no more than three months is granted.

3) Water Lubricated shafts (open systems)

A) Survey intervals (see Table 3.7)

The following survey intervals between surveys according to Method 4 are applicable to all types of propeller connections.

— For keyless propeller connections, the maximum interval between two consecutive dismantling and verifications of the shaft cone by means of non-destructive examination (NDE) shall not exceed 15 years.

— For surveys completed within 3 months before the shaft survey due date, the next period will start from the shaft survey due date.

a) Configurations allowing 5 year intervals

i) Single shaft operating exclusively in fresh water.

ii) Single shaft provided with adequate means of corrosion protection, single corrosion resistant shaft.

iii) All kinds of multiple shafts arrangements.

b) Other systems

Shaft not belonging in one of the configurations listed in 3).A).a) above has to be surveyed according to Method 4 every 3 years.

B) Survey extensions (see Table 3.7)

For all types of propeller connections, the interval between two consecutive surveys may be extended after the execution of extension survey as follows:

a) Extension up to a maximum of 1 year: no more than one extension can be granted. No further extension, of other type, can be granted.
b) Extension up to a maximum of 3 months: no more than one "three months extension" can be granted. In the event an additional extension is requested the requirements of the "one year extension" are to be carried out and the shaft survey due date prior to the previous extension is extended for a maximum of one year.

The extension survey should normally be carried out within 1 month of the shaft survey due date and the extension counts from the shaft survey due date.

If the extension survey is carried out more than 1 month prior to the shaft survey due date, then the period of extension counts from the date of the extension survey was completed.

Table 3.6 Table of Survey Intervals (closed systems)

SURVEY INTERVALS (closed systems)			
Oil Lubricated			
	Flanged Propeller Coupling	**Keyless Propeller Coupling**	**Keyed Propeller Coupling[b]**
Every five years[a]	Method 1 or Method 2 or Method 3	Method 1 or Method 2 or Method 3[c]	Method 1 or Method 2
Extension 2,5 Y	Yes[d]	Yes[d]	Yes[d]
Extension 1 Y	Yes[e]	Yes[e]	Yes[e]
Extension 3 M	Yes[f]	Yes[f]	Yes[f]
Closed Loop Systems Fresh Water Lubricated			
	Flanged Propeller Coupling	**Keyless Propeller Coupling**	**Keyed Propeller Coupling[b]**
Every five years[a]	Method 1[g] or Method 2 or Method 3	Method 1[g] or Method 2 or Method 3	Method 1[g] or Method 2
Extension 2,5 Y	Yes[d]	Yes[d]	Yes[d]
Extension 1 Y	Yes[e]	Yes[e]	Yes[e]
Extension 3 M	Yes[f]	Yes[f]	Yes[f]

General notes :
For surveys (Method 1, or Method 2, or Method 3) completed within 3 months before the shaft survey due date, the next period will start from the shaft survey due date.
The extension survey should normally be carried out within 1 month of the shaft survey due date and the extension counts from the shaft survey due date. If the extension survey is carried out more than 1 month prior to the shaft survey due date, then the period of extension counts from the date of the extension survey was completed.
Notes :
a. Unless an Extension type (Extension 2,5 Y, Extension 1 Y, Extension 3 M) is applied in between.
b. Method 3 not allowed.
c. The maximum interval between two surveys carried out according to Method 1 or Method 2 shall not exceed 15 years, except in the case when one extension for no more than three months is granted.
d. no more than one extension can be granted. No further extension of other type can be granted.
e. no more than two consecutive extensions can be granted. In the event an additional extension is requested the requirements of the "2,5 year extension" are to be carried out and the shaft survey due date, prior to the previous extension(s), is extended for a maximum of 2,5 years.
f. no more than one three months extension can be granted. In the event an additional extension is requested the requirements of the "one year extension" or "2,5 years extension" are to be carried out and the shaft survey due date, prior to the previous extension, is extended for a maximum of one year or 2,5 years.
g. The maximum interval between two surveys carried out according to Method 1 shall not be more than 15 years.

Table 3.7 Table of Survey Interval (open system)

SURVEY INTERVALS (open systems)			
- Single Shaft operating exclusively in Fresh Water. - Single Shaft provided with adequate means of corrosion protection, Single corrosion resistant shaft. - All kinds of Multiple shafts arrangements.		Other shaft configuration.	
All kinds of Propeller Coupling[d]		All kinds of Propeller Coupling[d]	
Every five years[a]	Method 4	Every three years[a]	Method 4
Extension 1 Y	Yes[b]	Extension 1 Y	Yes[b]
Extension 3 M	Yes[c]	Extension 3 M	Yes[c]

General notes:

For surveys (Method 4) completed within 3 months before the shaft survey due date, the next period will start from the shaft survey due date.

The extension survey should normally be carried out within 1 month of the shaft survey due date and the extension counts from the shaft survey due date. If the extension survey is carried out more than 1 month prior to the shaft survey due date, then the period of extension counts from the date of the extension survey was completed.

Notes:

a. Unless an Extension type (Extension 1 Y, Extension 3 M) is applied in between.

b. No more than one extension can be granted. No further extension, of other type, can be granted.

c. No more than one extension can be granted. In the event an additional extension is requested the requirements of the one year extension are to be carried out and the shaft survey due date prior to the previous extension is extended for a maximum of one year.

d. For keyless propeller connections the maximum interval between two consecutive dismantling and verifications of the shaft cone by means of non-destructive examination (NDE) shall not exceed 15 years.

1.4.2 Shaft Survey Methods

1) Oil Lubricated shafts or Closed Loop System Fresh Water Lubricated Shafts (closed system)

A) METHOD 1

The survey is to consist of:

a) Drawing the shaft and examining the entire shaft, seals system and bearings
b) For keyed and keyless connections:
   i) Removing the propeller to expose the forward end of the taper,
   ii) Performing a non-destructive examination (NDE) by an approved surface crack-detection method all around the shaft in way of the forward portion of the taper section, including the keyway (if fitted). For shaft provided with liners the NDE shall extended to the after edge of the liner.
c) For flanged connection:
   i) Whenever the coupling bolts of any type of flange-connected shaft are removed or the flange radius is made accessible in connection with overhaul, repairs or when deemed necessary by the surveyor, the coupling bolts and flange radius are to be examined by means of an approved surface crack detection method.
d) Checking and recording the bearing clearances.
e) Verification that the propeller is free of damages which may cause the propeller to be out of balance.
f) Verification of the satisfactory conditions of inboard and outboard seals during the re-installation of the shaft and propeller.
g) Recording the bearing wear down measurements (after re-installation)

B) METHOD 2

The survey is to consist of:

a) For keyed and keyless connections:
   i) Removing the propeller to expose the forward end of the taper,
   ii) Performing a non-destructive examination (NDE) by an approved surface crack-detection Method all around the shaft in way of the forward portion of the taper section, including the keyway (if fitted).
b) For flanged connection:
   i) Whenever the coupling bolts of any type of flange-connected shaft are removed or the flange radius is made accessible in connection with overhaul, repairs or when deemed necessary by the surveyor, the coupling bolts and flange radius are to be examined by means of an approved surface crack detection Method.
c) Checking and recording the bearing wear down measurements.
d) Visual Inspection of all accessible parts of the shafting system.
e) Verification that the propeller is free of damages which may cause the propeller to be out of balance.
f) Seal liner found to be or placed in a satisfactory condition.
g) Verification of the satisfactory re-installation of the propeller including verification of satisfactory conditions of inboard and outboard seals.

Pre-requisites to satisfactorily verify in order to apply METHOD 2:

a) Review of service records.
b) Review of test records of:
   i) Lubricating Oil analysis (for oil lubricated shafts), or
   ii) Fresh Water Sample test (for closed system fresh water lubricated shafts).
c) Oil sample Examination (for oil lubricated shafts), or Fresh Water Sample test (for closed system fresh water lubricated).
d) Verification of no reported repairs by grinding or welding of shaft and/or propeller.

C) METHOD 3

The survey is to consist of:

a) Checking and recording the bearing wear down measurements.
b) Visual Inspection of all accessible parts of the shafting system.
c) Verification that the propeller is free of damages which may cause the propeller to be out of balance.
d) Seal liner found to be or placed in a satisfactory condition.
e) Verification of the satisfactory conditions of inboard and outboard seals.

Pre-requisites to satisfactorily verify in order to apply METHOD 3:

a) Review of service records.
b) Review of test records of:
   i) Lubricating Oil analysis (for oil lubricated shafts), or
   ii) Fresh Water Sample test (for closed system fresh water lubricated shafts).
c) Oil sample Examination (for oil lubricated shafts), or Fresh Water Sample test (for closed system fresh water lubricated).
d) Verification of no reported repairs by grinding or welding of shaft and/or propeller.

2) Shaft extension surveys - Extension types

A) Extension up to 2,5 years

The survey is to consist of:

a) Checking and recording the bearing wear down measurements, as far as practicable.
b) Visual Inspection of all accessible parts of the shafting system.
c) Verification that the propeller is free of damages which may cause the propeller to be out of balance.
d) Verification of the effectiveness of the inboard seal and outboard seals.

Pre-requisites to satisfactorily verify in order to apply EXTENSION UP TO 2,5 YEARS:

a) Review of service records.
b) Review of test records of
   i) Lubricating Oil analysis (for oil lubricated shafts), or
   ii) Fresh Water Sample test (for closed system fresh water lubricated shafts).
c) Oil sample Examination (for oil lubricated shafts), or Fresh Water Sample test (for closed system fresh water lubricated).
d) Verification of no reported repairs by grinding or welding of shaft and/or propeller.
e) Confirmation from the Chief Engineer that the shafting arrangement is in good working condition.

B) Extension up to 1 year

The survey is to consist of:

a) Visual Inspection of all accessible parts of the shafting system.
b) Verification that the propeller is free of damages which may cause the propeller to be out of balance.
c) Verification of the effectiveness of the inboard seal and outboard seals.

Pre-requisites to satisfactorily verify in order to apply EXTENSION UP TO 1 YEAR:

a) Review of the previous wear down and/or clearance recordings.
b) Review of service records.
c) Review of test records of
   i) Lubricating Oil analysis (for oil lubricated shafts), or
   ii) Fresh Water Sample test (for closed system fresh water lubricated shafts).
d) Oil sample Examination (for oil lubricated shafts), or Fresh Water Sample test (for closed system fresh water lubricated).
e) Verification of no reported repairs by grinding or welding of shaft and/or propeller.
f) Confirmation from the Chief Engineer that the shafting arrangement is in good working condition.

C) Extension up to 3 months

The survey is to consist of:

a) Visual Inspection of all accessible parts of the shafting system.
b) Verification of the effectiveness of the inboard seal.

Pre-requisites to satisfactorily verify in order to apply EXTENSION UP TO 3 MONTHS:

a) Review of the previous wear down and/or clearance recordings.
b) Review of service records.
c) Review of test records of
   i) Lubricating Oil analysis (for oil lubricated shafts), or
   ii) Fresh Water Sample test (for closed system fresh water lubricated shafts).

d) Oil sample Examination (for oil lubricated shafts), or Fresh Water Sample test (for closed system fresh water lubricated).
e) Verification of no reported repairs by grinding or welding of shaft and/or propeller.
f) Confirmation from the Chief Engineer that the shafting arrangement is in good working condition.

3) Shafts Survey Methods of Water Lubricated shafts (open systems)

A) METHOD 4

The survey is to consist of:

a) Drawing the shaft and examining the entire shaft (including liners, corrosion protection system and stress reducing features, where provided), inboard seal system and bearings.
b) For keyed and keyless connections:
   i) removing the propeller to expose the forward end of the taper,
   ii) performing a non-destructive examination (NDE) by an approved surface crack-detection Method all around the shaft in way of the forward portion of the taper section, including the keyway (if fitted). For shaft provided with liners the NDE shall be extended to the after edge of the liner
c) For flanged connection:
   i) Whenever the coupling bolts of any type of flange-connected shaft are removed or the flange radius is made accessible in connection with overhaul, repairs or when deemed necessary by the surveyor, the coupling bolts and flange radius are to be examined by means of an approved surface crack detection method.
d) Checking and recording the bearing clearances.
e) Verification that the propeller is free of damages which may cause the propeller to be out of balance.
f) Verification of the satisfactory conditions of inboard seal during re-installation of the shaft and propeller.

B) Shaft extension surveys - Extension types

a) Extension up to 1 year

The survey is to consist of:

   i) Visual Inspection of all accessible parts of the shafting system.
   ii) Verification that the propeller is free of damages which may cause the propeller to be-out of balance.
   iii) Checking and recording the clearances of bearing.
   iv) Verification of the effectiveness of the inboard seal.

Pre-requisites to satisfactorily verify in order to apply EXTENSION UP TO 1 YEAR:

   i) Review of the previous clearance recordings.
   ii) Service records.
   iii) Verification of no reported repairs by grinding or welding of shaft and/or propeller.
   iv) Confirmation from the Chief Engineer that the shafting arrangement is in good working condition.

b) Extension up to 3 months

The survey is to consist of:

   i) Visual Inspection of all accessible parts of the shafting system.
   ii) Verification that the propeller is free of damages which may cause the propeller to be-out of balance.
   iii) Verification of the effectiveness of the inboard seal.

Pre-requisites to satisfactorily verify in order to apply EXTENSION UP TO 3 MONTHS:

i) Review of the previous clearance recordings.
ii) Service records.
iii) Verification of no reported repairs by grinding or welding of shaft and/or propeller.
iv) Confirmation from the Chief Engineer that the shafting arrangement is in good working condition.

1.4.3 Vane wheels

Vane wheels are to be examined in dismounted condition in intervals of nominally 2,5 years with an admissible time window of ± 6 months.

1.4.4 Other systems

Other systems for main propulsion purposes, such as rudder and steering propellers, pod propulsion systems, pump jet units, etc., are subject to the same survey intervals as propeller shafts and tube shafts.

1.5 Periodical surveys and tests of individual machinery items

1.5.1 The periodical surveys of individual machinery items or installations listed below are to be carried out in addition to those prescribed above, for maintenance of Class.

Surveys of machinery may be carried out on a PMS basis (see B.1.3.4) or CM / CBM basis (see B.1.3.5).

1.5.2 Steam boiler plants

Steam boilers are to be subjected to the following examinations and tests at regular intervals[5]). The term 'steam boilers' includes exhaust gas boilers and warm water and hot water generators (except where they are heated by steam or liquids).

1) Internal inspection

A) Water tube boilers used for main propulsion, including reheat boilers, all other boilers of essential service, and boilers of non-essential service having working pressure exceeding 0,35 N/mm^2 (3,5 bar) and a heating surface exceeding 4.5 m^2, are to be surveyed internally. The internal inspections are to be carried out at least twice during 5-year Class Renewal Survey. In any cases the maximum interval between any two such internal inspections shall not exceed 36 months.

B) An extension of the internal inspection of the boiler up to 3 months can be granted under exceptional circumstances[6]. The extension may be granted by BKI after the following is satisfactorily carried out:

a) external inspection of the boiler
b) examination and functional test of the boiler safety valve relieving gear (easing gear)
c) functional test of the boiler protective devices
d) review of the following records since the last internal inspection:

i) Operational documentation
ii) Maintenance Documentation
iii) Repairs history
iv) Records of feedwater analysis

[5]) For steam boiler plants on board seagoing vessels, where BKI is authorised to carry out the statutory inspections, more extensive regulations of the country, where the ship is registered, have to be observed.

[6]) See 1.6.1.2

C) At each survey, the boilers, superheaters, and economizers are to be examined internally on water-steam side and fire side. Boiler mountings and safety valves are to be examined at each survey and opened out as considered necessary by BKI.

D) When direct visual internal inspection is not feasible due to the limited size of the internal spaces, such as for small boilers and/or narrow internal spaces, this may be replaced by a hydrostatic pressure test or by alternative verifications as determined by the BKI.

E) The adjustment of the safety valves is to be verified during each boiler internal survey. Boiler safety valve and its relieving gear are to be examined and tested to verify satisfactory operation. However, for exhaust gas heated economizers, if steam cannot be raised at port, the safety valves may be set by the Chief Engineer at sea, and the results recorded in the log book for review by the BKI.

F) Review of the following records since the last Boiler Survey is to be carried out as part of the survey:

a) Operational documentation
b) Maintenace Documentation
c) Repairs history
d) Records of feedwater analysis

2) External inspection

External survey of boilers including test of safety and protective devices, and test of safety valve using its relieving gear, is to be carried out annually, within the window of the Annual Survey of a ship. For exhaust gas heated economizers, the safety valves are to be tested by the Chief Engineer at sea within the annual survey window. This test is to be recorded in the log book for review by the attending Surveyor prior to crediting the Annual Survey of Machinery.

3) Exhaust Gas Heated Economizers

In addition to the other requirements of 1.5.2.1).A) in exhaust gas heated economizers of the shell type, all accessible welded joints are to be subjected to a visual examination for cracking. Non-destructive Testing may be required for this purpose.

1.5.3 Thermal oil plants

1) Internal inspection

A) An internal inspection, including a tightness test of the whole plant, is to be performed at intervals of 5 years, counting from commencement of initial operation, and possibly in connection with a Class Renewal Survey.

B) During the internal inspection the heating surfaces and, where appropriate, the combustion chamber, are to be examined for contamination, corrosion, deformations and leakages. As a rule, tightness tests are to be carried out to the admissible working pressure. Following repairs and renewals of plant components exposed to pressure, a pressure test is to be carried out to 1,5 times the admissible working pressure.

2) External inspection

A) Thermal oil plants are to be subjected to functional tests, while in operation. In detail, the following items are to be examined:

— the entire thermal oil plant for leakages
— the condition of the insulation
— the functioning of the indication, control and safety equipment
— the remote controls for the shut-off and discharge valves

— the leakage monitors for the heaters
— the emergency switch off devices (oil firing, pumps)
— the safety switch off devices for the oil burner
— lighting, emergency lighting and labeling.

B) Thermal oil plants are to be subjected to an external inspection once a year. Proof of continued usability of the thermal oil shall be furnished yearly by a competent testing agency.

C) For the external inspection a time window of ± 3 months is admissible.

1.5.4 Steam pipes

1) Steam pipes are to be examined regularly every 5 years, possibly in connection with a class renewal survey. Starting from Class Renewal II, the steam pipes are to be examined as to their internal and, where advisable, as to their external condition as well, employing non-destructive testing methods, where necessary.

2) Steam pipes with service temperatures exceeding 500 °C are to be examined for expansion at 5 year intervals, starting from Class Renewal II, at the latest.

3) Steam pipes with steam temperatures of up to 350 °C and with outside diameters of more than 75 mm, are to be examined at random. Examinations of the internal condition of the pipelines, especially of pipe bends, or additional more detailed examinations may be required. Instead of the internal inspection, a hydraulic test may be affected to a pressure equal to 1,5 times the design pressure, but not exceeding that of the prescribed test pressure for the pertinent boiler plant.

4) In the case of steam pipes with steam temperatures exceeding 350°C (at least two) selected individual parts of pipes are to be dismounted from each piping system (main steam pipe and auxiliary steam pipes of each service group) having an outside diameter exceeding 32 mm. Approximately 10 % of the welding seams at bends, flanges or tee-branches are to be subjected to an inspection for cracks by recognized non- destructive test methods.

5) Before being used again, removed screws of flanged joints are to be inspected for their general condition and cracks and renewed, if necessary.

6) Steam pipes designed to resist steam temperatures exceeding 500°C and welded piping systems are to be examined as follows:

   A) Flanged pipes in accordance with 1.5.4.4); however, the inspection for cracks has to cover at least 20 % of the welded seams.

   B) If internal examination of welded piping systems through the inspection holes appears to be inadequate or if their reliable assessment is not possible even by ultrasonic testing or an equivalent examination method, it may be necessary to cut out certain parts of pipes. At least 20 % of the welding seams are to be inspected for cracks.

   C) Removed screws of flanged joints, see above 1.5.4.4).

7) Heating coils in oil tanks and vessels are to be subjected to a pressure test to 1,5 times the allowable working pressure.

   The same applies to heating coils in cargo tanks.

1.5.5 Pressure vessels

1) Pressure vessels which are subject to survey by BKI according to the Construction Rules, are to be examined internally every 5 years, possibly in connection with a Class Renewal Survey.

2) Pressure vessels having a product of pressure [bar] by cubic capacity [l] of p x ℓ ≤ 200 are to be surveyed on the occasion of checking of the pertinent piping system.

3) Periodical tests of CO_2 cylinders and other gas cylinders for fire-extinguishing purposes are to be carried out at intervals not exceeding 10 years, as follows:

   At least 10 % of the gas cylinders provided are to be subjected to an internal inspection and hydrostatic test. If one or more gas cylinders fail, a total of 50 % of the gas cylinders provided are to be subjected to an internal inspection and hydrostatic test. If further gas cylinders fail at the extended test, all gas cylinders are to be subjected to foregoing tests. In any case, all gas cylinders having failed shall be replaced by new ones.

   Halon containers of existing fixed Halon fire-extinguishing systems are exempted from this requirement. Irrespective thereof, on the occasion of recharging CO_2 cylinders, Halon containers and other gas cylinders are to be tested, if the last test dates back 10 years or more.

4) Low pressure CO_2 bulk storage containers are subject to internal survey if the content has been released and the container is more than 5 years old but not more frequently than once within 5 years.

5) In the case of vessels for powder extinguishing agents, periodical pressure tests may be dispensed with, provided that their internal inspection does not reveal any deficiencies.

6) Receivers in hydraulic or pneumatic control systems are to be examined during maintenance and repairs at the system; air receivers with a product of pressure by cubic capacity p x ℓ > 1000 (p in bar, ℓ in liter) are to be subjected to an internal inspection at least once during each Class period and/or at intervals not exceeding 5 years.

7) The intervals between surveys as referred to may be reduced, depending on the findings.

8) Supplementary tests

   — Where pressure vessels cannot be satisfactorily examined internally and where their unobjectionable condition cannot be clearly recognized during the internal inspection, recognized non-destructive test methods are to be applied and/or hydraulic pressure tests are to be carried out.

   — The hydraulic pressure test is to be performed at a test pressure of 1,5 times the maximum allowable working pressure. If the maximum allowable working pressure is less than 2 bars, then the test pressure should be at least 1 bar more than the maximum allowable working pressure. Pressure vessels manufactured in accordance with DIN Standard 4810 are, subject to that Standard, to be tested to 1,3 times the admissible working pressure. The test pressure shall in no case exceed the initial test pressure.

1.5.6 Automation equipment

1) For confirmation of the Class Notation, machinery having been assigned the additional notations **OT**, **OT-nh**, **OT-S** or **OT-F** is to be inspected in accordance with BKI Survey programmes during Annual, Intermediate or Class Renewal Surveys, respectively.

2) The monitoring equipment and the automated functions of the machinery installation are to be subjected to operational trials according to 1) above. The bridge remote control equipment of the propulsion system will be examined as required.

1.5.7 Inert gas system

Tankers with the Class Notation INERT are to be surveyed in accordance with BKI Survey programme, at intervals of nominally 2,5 years, preferably on the occasion of each Class Renewal and Intermediate survey.

1.5.8 Propulsion Steam Turbines: Modification of first Class Renewal Survey

1) Where the propulsion steam turbines are of a well-known type, and fitted with rotor position indicators and vibration indicators of an approved type, as well as measuring equipment of steam pressure at proper locations along the steam flow, and the arrangements for change over in case of emergency operation of the plant are readily operable, the first Class Renewal Survey may be limited to the examination of rotor bearings, thrust bearings and flexible couplings, provided the surveyor has been satisfied from operation service records and power trials subsequent to the survey, that the turbine plant is in good working condition.

2) Turbine casings should be opened at the next Class Renewal Survey and subsequent Class Renewal Surveys.

1.5.9 Machinery Verification Runs

1) As part of the Class Renewal Survey of Machinery, a dock trial is to be carried out to attending Surveyors' satisfaction to confirm satisfactory operation of main and auxiliary machinery. If significant repairs are carried out to main or auxiliary machinery or steering gear, consideration should be given to a sea trial to attending Surveyors' satisfaction.

2) If the significant repairs as stated in 1), is considered by BKI to have any impact on response characteristics of the propulsion systems, then the scope of sea trial shall also include a test plan for astern response characteristics based on those required for such an equipment or systems when fitted to the new ship. Refer to Rules for Machinery Installations (Pt.1, Vol.III) Sec.2.P for astern testing requirements.

   The tests are to demonstrate the satisfactory operation of the equipment or system under realistic service conditions at least over the manoeuvring range of the propulsion plant, for both ahead and astern directions.

   Depending on the actual extent of the repair, BKI may accept a reduction of the test plan.

1.6 Bottom Surveys

1.6.1 Schedule

1) The Owner is to notify BKI whenever the outside of the ship's bottom and related items can be examined in dry-dock or on a slipway.

   Examinations of the outside of the ship's bottom and related items of ships is normally to be carried out with the ship in dry-dock. However, consideration may be given to alternate examination while the ship is afloat as an In-water Survey, subject to provisions of 1.7. Special consideration is to be given to ships of 15 years or over before being permitted to have such examinations. For ESP ships of 15 years of age and over, such examinations are to be carried out with the ship in dry-dock

2) For seagoing ships carrying the Character of Classification **A100** there is to be a minimum of 2 examinations of the outside of the ship's bottom and related items during each 5 years Class Renewal Survey period. One such examination is to be carried out in conjunction with the Class Renewal Survey. In exceptional circumstance[7], an extension of examination of the ship's bottom of 3 months beyond the due date coincide with the extension of class can be granted.

   In all cases the interval between any two such examination is not to exceed 36 months and no extension should be permitted on the period of 36 months between any two such examinations. If the first ship's bottom survey is carried out between 24 and 27 months then the thirty-sixth-month limitation may prevent the certificate being extended by the periods permitted above.

[7] 'Exceptional circumstances' means unavailability of dry-docking facilities; unavailability of repair facilities; unavailability of essential materials, equipment or spare parts; or delays incurred by action taken to avoid severe weather conditions.

3) Compliance with 1.6.1.2) does not absolve the Owner from compliance with the requirements of SOLAS as amended, especially when shorter intervals between examination of the ship's bottom for certain types of ship are required.

4) The interval between examinations of the outside of the ship's bottom and related items for ships operating in fresh water and for certain harbour or non-self-propelled craft may be greater than that given in 1.6.1.2).

5) Seagoing ships which carries more than 12 passengers are to be presented for bottom survey within 3 months before the due date of annual survey. See also 1.7.2.

6) It is expected that also for each Bottom Survey performed in addition to the Bottom Surveys stipulated by the classification requirements the Surveyor will be called to attend.

7) The surveys may be carried out on the occasion of a scheduled Intermediate Survey unless for ships referred to in 1.6.1.5). The date of last bottom survey is the date in which bottom survey is concluded.

8) If a Bottom Survey is intended to be credited to a Class Renewal, all tests of hull and machinery prescribed for the respective Class Renewal and usually requiring dry-docking will have to be carried out.

   A Bottom Survey for Class Renewal may be carried out up to 15 months before completion of the Class Renewal.

9) Bottom surveys at an "Extended dry-dock interval" can be credited as IW survey during Intermediate and Class Renewal Surveys in terms of the 7,5 years interval, see B.1.8.

10) For Oil Tankers, Combination Carriers, Bulk Carriers, Chemical Tankers, Double Hull Oil Tankers, Double Side Skin Bulk Carriers and General Dry Cargo Ships, and Liquefied Gas Carriers reference is also being made to Section 4 as applicable.

1.6.2 Scope of survey

1) When a ship is in dry-dock or on a slipway, it is to be placed on blocks of sufficient height and with the necessary staging to permit the examination of elements such as shell plating including bottom and bow plating, stern frame and rudder, sea chests and valves, propeller, etc.

2) The shell plating is to be examined for excessive corrosion, or deterioration due to chafing or contact with the ground and for any undue unfairness or buckling. Special attention is to be paid to the connection between the bilge strakes and the bilge keels. Important plate unfairness or other deterioration which do not necessitate immediate repairs are to be recorded.

3) Sea chests and their gratings, sea connections and overboard discharge valves and cocks and their fastenings to the hull or sea chests are to be examined. Valves and cocks need not be opened up more than once in a Class Renewal Survey period unless considered necessary by the Surveyor.

4) Visible parts of rudder, rudder pintles, rudder shafts and couplings and stern frame are to be examined. If considered necessary by the Surveyor, the rudder is to be lifted or the inspection plates removed for the examination of pintles. The clearance in the rudder bearings is to be ascertained and recorded. Where applicable, pressure test of the rudder may be required as deemed necessary by the surveyor.

5) Visible parts of propeller and stern bush, are to be examined. The clearance in the stern bush and the efficiency of the oil gland, if fitted, are to be ascertained and recorded. For controllable pitch propellers, the Surveyor is to be satisfied with the fastenings and tightness of hub and blade sealing. Dismantling need not to be carried out unless considered necessary by the Surveyor.

6) Visible parts of side thrusters are to be examined. Other propulsion systems which also have manoeuvring characteristics (such as directional propellers, vertical axis propellers, water jet units) are to be examined externally with focus on the condition of gear housing, propeller blades, bolt locking and other fastening arrangements. Sealing arrangement of propeller blades, propeller shaft and steering column shall be verified.

Note:

For the survey of propeller shafts, refer to 1.4.

1.7 In-Water Surveys

1.7.1 General

1) For ships assigned the Additional Class Notation **IW**, an In-Water Survey performed with the assistance of an approved diving firm may be recognized as a substitute for every first periodical Dry Docking Survey.

   The **IW** may only be assigned to the seagoing ship carrying character of class **A100**.

2) The In-Water Survey is to provide the information normally obtained from a Docking Survey Special consideration shall be given to ascertaining rudder bearing clearances and stern bush clearances of oil stern bearings based on a review of the operating history, on board testing and stern oil sample reports. These considerations are to be included in the proposals for In-Water Survey which are to be submitted in advance of the survey so that satisfactory arrangements can be agreed with BKI.

3) On request of the owner an In-Water Survey in lieu of every first periodical Dry-Docking Survey may only be carried out for ships without the Class Notation IW, provided that the technical requirements are full filled and with the assistance of an approved diving firm. The final permission will be given by BKI Head Office.

1.7.2 Bottom survey for Passenger ships with Class notation IW

1) In general, bottom survey shall be carried out in dry-dock. For ships having the Class Notation IW the inspections of the outside of the ship's bottom are to be carried out in dry-dock at least twice in any 5 year period. In all cases, the interval between bottom inspections shall not exceed 36 months.

   The remaining yearly bottom surveys that are not conducted in dry-dock may be carried out with the ship afloat by an approved diving company provided that the vessel has not sustained any grounding or contact damage since the previous bottom survey.

2) The bottom survey, regardless of method, should be carried out within the allowable time window (i.e., within 3 months before the due date of Annual survey).

   Additionally, bottom survey conducted afloat should only be carried out when the conditions are satisfactory and the proper equipment and suitably qualified staff is available. Rudder bearing clearances need not be taken at the afloat inspections.

3) Where acceptable to the Administration, the minimum number of bottom survey in dry-dock of a passenger ship (which is not a Ro-Ro passenger ship) in any five-year period may be reduced from two to one[8]. In such cases the interval between consecutive inspections in dry-dock should not exceed 60 months.

[8] Refer to the Guidelines for the assessment of technical provisions for the performance of an in-water survey in lieu of bottom inspection in dry-dock to permit one dry-dock examination in any five-year period for passenger ships other than ro-ro passenger ships (MSC.1/Circ.1348)

4) Special consideration should be given to ships of 15 years of age or over prior to permission being granted to carry out an In-Water Survey in lieu of a Dry-Docking Survey.

5) More extensive Flag State requirements regarding the substitution of the bottom survey in dry-dock by an in-water survey shall be observed.

1.7.3 Performance of survey

1) The In-water Survey is to be carried out under the surveillance of a surveyor by an in-water survey firm approved by BKI as a service supplier according to Rules for Approval of Manufacturers and Service Suppliers (Pt.1, Vol.XI) Sec.3, C.

2) Validity of an approval granted will depend on the continued qualification for satisfactorily carrying out the work required. The approval will have to be renewed after a period not exceeding 3 years.

3) Unless accessible from outside with the aid of the vessel's trim and/or heel, underwater parts are to be surveyed and/or relevant maintenance work is to be carried out with assistance by a diver whose performance is controlled by the Surveyor, using an underwater camera with monitor, two–way communication and recording systems.

4) The In-water Survey is to be carried out with the ship in sheltered water and preferably with weak tidal streams and currents. The in-water visibility and the cleanliness of the hull below the waterline is to be clear enough to permit a meaningful examination which allows the surveyor and the in-water survey firm to determine the condition of the plating, appendages and the welding. BKI is to be satisfied with the methods of orientation of the divers or Remotely Operated Vehicle (ROV) on the plating, which should make use where necessary of permanent markings on the plating at selected points.

5) The equipment, procedure for observing and reporting the survey are to be discussed with the parties involved prior to the In-water Survey, and suitable time is to be allowed to permit the in-water survey firm to test all equipment beforehand.

6) The underwater pictures on the surface monitor screen shall offer reliable technical information such as to enable the Surveyor to judge the parts and/ or the areas surveyed.

7) Documentation suited for video reproduction including voice is to be made available to BKI.

1.7.4 Additional examinations

1) Where, for instance, grounding is assumed to have taken place, the Surveyor may demand individual parts of the underwater body to be additionally inspected from inside.

2) If during the in-water survey damages are found which can be assessed reliably only in dry-dock or require immediate repair, the vessel is to be dry docked. If the coating of the underwater body is in a condition which may cause corrosion damages affecting vessel's class to occur before the next dry docking, the vessel is to be dry docked.

1.8 Extended Dry-docking scheme (EDD)

1.8.1 Subject to provisions outlined below, Guidance for Marine Industry (Pt.1, Vol.AC) Sec.7.R-133, and any additional specific Flag Administration requirements, the dry-docking interval can be extended with the approval of the ship's Flag Administration to 7,5 years.

1.8.2 The extended Dry Docking Scheme is in any case subject to approval by the relevant Flag State. The "Extended dry-dock interval" generally applies to container ships. The following ships and ship types are not eligible for the extended dry-docking scheme:

A) Passenger Ships;

B) Ships subject to the Enhanced Survey Program (ESP);

C) General dry cargo ships (see Section 4-II);

D) Ships fitted with propulsion thrusters;

E) Ships where the propeller connection to the shaft is by means of a keyed taper;

F) High Speed Craft (HSC).

1.8.3 At the 7,5 years interval it is possible to perform the first two forthcoming bottom surveys as underwater survey in the scope of an in-water survey. The third bottom survey at 7,5 years has to be performed in dry-dock. The interval is independent whether the bottom survey will be performed at an Intermediate or Class renewal survey.

A) The In-Water Survey should be carried out in accordance with 1.7

B) An in-water survey plan should be submitted to the BKI for review in advance of the survey and should include the following:

a) Scheduled time and location for survey;
b) Name of approved diving company;
c) Means for cleaning of the hull below waterline;
d) Means of access for examination of sea chests, sea valves and box coolers;
e) Provisions for determining the condition of anchoring equipment, ranging of anchor chain cables and examination of the chain lockers when due for survey and/or as required by the surveyor;
f) Provisions for surveying and maintaining sea connections including thickness measurements of sea chests;
g) Results of inspections by the Owner's personnel of double bottom/double side ballast tanks (during the last 3 years) and other spaces adjacent to the shell with reference to structural deterioration in general, leakages in tank boundaries and piping and condition of the protective coating;
h) Conditions for internal examination of double bottom/double side ballast tanks (e.g., information regarding tank cleaning, gas freeing, ventilation, lighting, etc.).

C) Prior to commencement of the in-water survey, a survey planning meeting is to be held for the purpose of ascertaining that all the arrangements envisaged in the survey plan are in place, so as to ensure the safe and efficient conduct of the survey work to be carried out.

D) If the In-Water Survey reveals damage, deterioration or other conditions that requires early attention, the surveyor may require that the ship be dry-docked in order that a detailed survey can be undertaken and necessary repairs carried out.

E) If the coating condition in double bottom/double side ballast tanks, void spaces and dry spaces is found in less than GOOD condition, the owner is to restore the coating to GOOD.

1.8.4 The dry-docking scheme will operate based upon the ship's age when entering the scheme.

For ships already in service, the extended dry-docking scheme may be implemented at any time until a ship reaches 10 years of age.

No extensions are to be granted for the dry-docking required at the end of each extended dry-dock interval.

1.8.5 Prior to acceptance into an EDD scheme, the owner is to submit the following information:

1) Provisions for carrying out maintenance required on electric/electronic sensors e.g. Echo-sounder, Doppler-Log, Speed-log (propeller speed-log or backpressure speed-log), seawater temperature gauges, electronic draught reading, etc.;

2) Provisions for maintaining the draft marks fore, aft and midships as well as Load line marks (painted and welded figures) and all other required hull markings;

3) Maintenance required of thrusters and stabilisers, if fitted, and provision for carrying out surveys or maintenance or as required by the surveyor;

4) Service experience to-date with hull coating system covered by manufacturer's guarantee that the underwater coatings used are designed to last for the extended period since the coating is to remain effective for the extended dry docking period;

5) Impressed cathodic protection system or provisions for renewal of external hull sacrificial anodes in the afloat condition.

1.8.6 Prior to acceptance into an EDD scheme, ships enrolled an extended dry-docking interval scheme should comply with the following provisions:

1) The ship should comply with the In-Water Survey provisions, rudder and shafting systems to be inspectable during in-water survey.

2) Protective coating in double bottom/double side ballast tanks, void spaces and all other spaces adjacent to the shell should be maintained in GOOD condition;

3) The shafting arrangement should fulfil the applicable requirements for Tail shaft Condition Monitoring Survey Arrangement (CM-PS), shaft bearing and sealing system of approved design and regular monitoring procedures implemented.

4) Hull maintenance scheme according to the Guidance for Hull Inspection and Maintenance Program (Part 7, Vol. D), to be implemented in accordance with ISM requirements.

1.8.7 The dry-docking survey required for the Class Renewal Survey at 15 years of age shall be carried out in a dry-dock. All ships in an EDD scheme shall be dis-enrolled once the ship reaches 15 years of age.

1.8.8 The Extended Dry-docking Scheme will be terminated in cases of change of the ship's owner, management or Flag Administration.

1.8.9 BKI may dis-enroll a ship from an EDD scheme at any time should it be found that the conditions for maintaining this extended Dry-dock scheme are not fulfilled anymore. Once the conditions for the scheme are no longer present, the ship will return to the normal docking interval and any due dock survey shall be carried out by the due date.

1.9 Clearence of Rudder stock

i) Clearence of Neck bearing

$$0{,}01 \cdot D + 2 \text{ (mm)}$$

Maximum clearence is 4 mm.

ii) Maximum clearence of pintle bearing

Pintle diameter (d)	Clearence
d <50 mm	3,0 mm
m <d <100 mm	5,0 mm
d >100 mm	0,01 · d + 4,0 mm Maximum: 6,0 mm

1.10 Clearence of Propeller shaft

1.10.1 Water lubricated shaft (bearing made of lignum vitae)

i) New assembly

between 0,003 · D + 0,2 (mm) and 0,004 · D + 0,5 (mm)

Where D is the diameter of shaft liner.

ii) Maximum clearence

0,01 · D + 2,5 (mm)

1.10.2 Oil lubricated shaft (white metal bearing)

i) New assembly

Clearence in general = between 0,001 · D + 0,3 (mm) to 0,001 · D + 0,5 (mm)

ii) Maximum clearence

0,0015 · D + 0,65 mm

iii) Maximum wear tolerance for shaft liner

— in the bearing area: 25 % of shaft liner thickness
— in the packing area: 50 % of shaft liner thickness

2. Non-periodical surveys

2.1 Damage and repair surveys

2.1.1 Damage and repair surveys fall due whenever the ship's hull, machinery or electrical installations and/or some special equipment classed have suffered a damage, which might affect the validity of the Class, see Section 2, B.2.

2.1.2 Where damage has occurred to the ship's hull, machinery, including the electrical plant, the automatic/remote control systems, etc., the damaged parts are to be made accessible for inspection in such a way that the kind and extent of the damage can be thoroughly examined and ascertained, see also Section 2, B.2.3.

In the case of grounding, dry docking or, alternatively, an In Water Survey is required.

2.1.3 The repair measures are to be agreed with the Surveyor such as to render possible confirmation of the Class without reservation upon completion of the repairs. In general, a confirmation of Class with Conditions of Class, e. g. in the case of a preliminary repair ("emergency repair"), requires to be approved by BKI Head Office.

2.1.4 Surveys conducted in the course of repairs are to be based on the latest technical knowledge and instructions by BKI. In exceptional cases advice is to be obtained from BKI Head Office, in particular where doubts exist as to the cause of damage.

2.1.5 For older ships, in the case of repairs and/or replacement of parts subject to classification, as a matter of principle, the Construction Rules in force during their period of construction continue to be applicable.

This does not apply in the case of modifications required to the structure in the light of new knowledge gained from damage analyses, with a view to avoiding recurrence of similar damages.

2.1.6 Regarding the materials employed and certificates required, the requirements for new buildings are applicable, see Section 2, B.3.

2.1.7 Regarding damages or excessive wastage beyond allowable limits that affect the vessel's Class, see Section 2, B.3.1.1 and Section 2, B.3.1.3.

2.2 Voyage Repairs and Maintenance

2.2.1 Where repairs to hull, machinery or equipment, which affect or may affect Classification, are to be carried out by a riding crew during a voyage, they are to be planned well in advance. A complete repair procedure including the extent of proposed repair and the need for Surveyor's attendance during the voyage is to be submitted to and agreed upon by BKI reasonably in advance. Failure to notify BKI, in advance of the repairs, may result in suspension of the vessel's class.

2.2.2 Where in any emergency circumstance, emergency repairs are to be effected immediately, the repairs should be documented in the ship's log and submitted thereafter to BKI for use in determining further survey requirements.

2.2.3 The above is not intended to include maintenance and overhaul to hull, machinery and equipment in accordance with the recommended manufacturer's procedures and established marine practice and which does not require the BKI's approval, however, any repair as a result of such maintenance and overhauls which affects or may affect classification is to be noted in the ship's log and submitted to the attending Surveyor for use in determining further survey requirements.

2.3 Conversion surveys

In the case of conversions of a ship's hull or machinery, surveys are to be conducted in accordance with the relevant approved particulars, as in the case of new buildings, see Section 2, B.3.

2.4 Occasional Surveys

BKI reserves the right to require Occasional Surveys to be held independently of any regular surveys. Such surveys may become necessary for examining a vessel's technical condition and are understood to form a part of BKI Quality Assurance System.

C. Periodic Survey of Fuel Installations on Ships other than Liquefied Gas Carriers utilizing gas or other low flash point fuels[9)]

1. Application

These requirements apply to ships, other than ship carrying liquefied gas in bulk, which utilize gas or other low flash point fuels as a fuel for propulsion prime mover/auxiliary power generation arrangements and associated systems.

These requirements are in addition to the requirements of B.1.5 (Periodical surveys and test of individual machinery items). These survey requirements do not cover fire protection, fire-fighting installation, and personnel protection equipment.

2. Class Renewal Survey

2.1 General

The Class Renewal Survey is to include, in addition to the requirements of the Annual Survey, examination, tests and checks of sufficient extent to ensure that the fuel installations are in a satisfactory condition and is fit for its intended purpose for the new period of class of 5 years to be assigned, subject to proper maintenance and operation and to periodical survey application date being carried out at the due dates.

[9)] These requirements are to be applied for surveys commenced on or after 1 January 2018.

2.2 Fuel Handling and Piping

All piping for fuel storage, fuel bunkering, and fuel supply such as venting, compressing, refrigerating, liquefying, heating storing, burning or otherwise handling the fuel and liquid nitrogen installations are to be examined. Removal of insulation from the piping and opening for examination may be required. Where deemed suspect, a hydrostatic test to 1,25 times the Maximum Allowable Relief Valve Setting (MARVS) for the pipeline is to be carried out. After reassembly, the complete piping is to be tested for leaks. Where water cannot be tolerated and the piping cannot be dried prior to putting the system into service, the Surveyor may accept alternative testing fluids or alternative means of testing.

2.3 Fuel Valves

All emergency shut-down valves, check valves, block and bleed valves, master gas valves, remote operating valves, isolating valves for pressure relief valves in the fuel storage, fuel bunkering, and fuel supply piping systems are to be examined and proven operable. A random selection of valves is to be opened for examination.

2.4 Pressure Relief Valves

i. Fuel Storage Tank Pressure Relief Valves. The pressure relief valves for the fuel storage tanks are to be opened for examination, adjusted, and function tested. If the tanks are equipped with relief valves with non-metallic membranes in the main or pilot valves, such non-metallic membranes are to be replaced.

ii. Fuel Supply and Bunkering Piping Pressure Relief Valves. Pressure relief valves for the fuel supply and bunkering piping are to be opened for examination, adjusted, and function tested. Where a proper record of continuous overhaul and retesting of individually identifiable relief valves is maintained, consideration will be given to acceptance on the basis of opening, internal examination, and testing of a representative sampling of valves, including each size and type of liquefied gas or vapor relief valve in use, provided there is logbook evidence that the remaining valves have been overhauled and tested since crediting of the previous Class Renewal Survey.

iii. Pressure/Vacuum Relief Valves. The pressure/vacuum relief valves, rupture disc and other pressure relief devices for interbarrier spaces and hold spaces are to be opened, examined, tested and readjusted as necessary, depending on their design.

2.5 Fuel Handling Equipment

Fuel pumps, compressors, process pressure vessels, inert gas generators, heat exchangers and other components used in connection with fuel handling are to be examined as required in the BKI Rules for periodical survey of machinery.

2.6 Electrical Equipment

i. Examination of electrical equipment to include the physical condition of electrical cables and supports, intrinsically safe, explosion proof, or increased safety features of electrical equipment.

ii. Functional testing of pressurized equipment and associated alarms.

iii. Testing of systems for de-energizing electrical equipment which is not certified for use in hazardous areas.

iv. An electrical insulation resistance test of the circuits terminating in, or passing through, the hazardous zones and spaces is to be carried out.

2.7 Safety Systems

Gas detectors, temperature sensors, pressure sensors, level indicators, and other equipment providing input to the fuel safety system are to be tested to confirm satisfactory operating condition.

i. Proper response of the fuel safety system upon fault conditions is to be verified.

ii. Pressure, temperature and level indicating equipment are to be calibrated in accordance with the manufacturer's requirements.

2.8 Fuel Storage Tanks

Fuel storage tanks are to be examined in accordance with an approved survey plan. For liquefied gas fuel storage tanks the following requirements applies:

1) In developing the inspection/survey plan, the requirements for the survey of liquefied gas fuel containment systems are to be in accordance with the requirements of Section 4-II, A.4.7.2 except as noted below:

   A) The tank insulation and tank support arrangements should be visually examined. Non-destructive testing may be required if conditions raise doubt to the structural integrity.

   B) Vacuum insulated independent fuel storage tanks of type C need not be examined internally. Where fitted, the vacuum monitoring system should be examined and records should be reviewed.

2) For vessels which need not comply with the International Code of Safety for Ships Using Gases or Other Low-Flashpoint Fuels (IGF Code), MSC Res.391(95), as amended, even though an inspection/survey plan is not required, the survey for liquefied gas fuel containment systems should be in accordance with paragraph i.

3. Annual Survey

3.1 General

The following is to be carried out during the survey of the Fuel Storage, Fuel Bunkering System, and Fuel Supply System:

3.1.1 Logbooks/Records

The logbooks and operating records are to be examined with regard to correct functioning of the gas detection systems, fuel supply/gas systems, etc. The hours per day of the reliquefaction plant, gas combustion unit, as applicable, the boil-off rate, and nitrogen consumption (for membrane containment systems) are to be considered together with gas detection records.

3.1.2 Operating and Maintenance Instruction Manuals

The manufacturer/builder instructions and manuals covering the operations, safety and maintenance requirements and occupational health hazards relevant to fuel storage, fuel bunkering, and fuel supply and associated systems for the use of the fuel, are to be confirmed as being aboard the vessel.

3.1.3 Control, Monitoring and Safety Systems

1) Gas detection and other leakage detection equipment in compartments containing fuel storage, fuel bunkering, and fuel supply equipment or components or associated systems, including indicators and alarms, is to be confirmed in satisfactory operating condition. Recalibration of the gas detection systems should be verified in accordance with the manufacturers' recommendations.

2) Verification of the satisfactory operation of the control, monitoring and automatic shutdown systems as far as practicable of the fuel supply and bunkering systems.

3) Operational test, as far as practicable, of the shutdown of ESD protected machinery spaces.

3.1.4 Fuel Handling Piping, Machinery and Equipment

Piping, hoses, emergency shut-down valves, remote operating valves, relief valves, machinery and equipment for fuel storage, fuel bunkering, and fuel supply such as venting, compressing, refrigerating, liquefying, heating, cooling or otherwise handling the fuel is to be examined, as far as practicable. Means for inerting is to be examined. Stopping of pumps and compressors upon emergency shut-down of the system is to be confirmed as far as practicable.

3.1.5 Ventilating System

Examination of the ventilation system, including portable ventilating equipment where fitted, is to be made for spaces containing fuel storage, fuel bunkering, and fuel supply units or components or associated systems, including air locks, pump rooms, compressor rooms, fuel preparation rooms, fuel valve rooms, control rooms and spaces containing gas burning equipment. Where alarms, such as differential pressure and loss of pressure alarms, are fitted, these should be operationally tested as far as practicable.

3.1.6 Drip Trays

Portable and fixed drip trays and insulation for the protection of the ship's structure in the event of leakage are to be examined.

3.1.7 Hazardous Areas

Electrical equipment and bulkhead/deck penetrations including access openings in hazardous areas are to be examined for continued suitability for their intended service and installation area.

3.1.8 Electrical Bonding

Electrical bonding arrangements in hazardous areas, including bonding straps where fitted, are to be examined.

3.2 Fuel Storage, Bunkering and Supply Systems

The following are to be examined, so far as applicable. Insulation need not be removed, but any deterioration or evidence of dampness is to be investigated:

3.2.1 Fuel Storage

1) External examination of the storage tanks including secondary barrier if fitted and accessible.

2) General examination of the fuel storage hold place.

3) Internal examination of tank connection space.

4) External examination of tank and relief valves.

5) Verification of satisfactory operation of tank monitoring system.

6) Examination and testing of installed bilge alarms and means of drainage of the compartment.

7) Testing of the remote and local closing of the installed main tank valve.

3.2.2 Fuel Bunkering System

1) Examination of bunkering stations and the fuel bunkering system.

2) Verification of satisfactory operation of the fuel bunkering control, monitoring and shutdown systems.

3.2.3 Fuel Supply System

Examination of the fuel supply system during working condition as far as practicable.

1) Verification of satisfactory operation of the fuel supply system control, monitoring and shut-down systems.

2) Testing of the remote and local closing of the master fuel valve for each engine compartment.

4. Intermediate Survey

4.1 General

In addition to the applicable requirements of the Annual Survey, the Intermediate Survey is also to include:

4.1.1 Safety Systems

Gas detectors, temperature sensors, pressure sensors, level indicators, and other equipment providing input to the fuel safety system are to be randomly tested to confirm satisfactory operating condition. Proper response of the fuel safety system upon fault conditions is to be verified.

D. Thickness Measurement

1. Procedural Requirements

1.1 Thickness Measurements required in the context of hull structural classification surveys, if not carried out by BKI itself shall be witnessed by a surveyor. The attendance of the surveyor shall be recorded.

1.2 This requires the surveyor to be on board, while the gaugings are taken, to the extent necessary to control the process. It is confirmed that this also applies to thickness measurements taken during voyages.

1.3 Survey meeting

Prior to commencement of the Intermediate or Class Renewal Survey, a meeting is to be held between the attending surveyor(s), the master of the ship or an appropriately qualified representative appointed by the master or Company, the owner's representative(s) in attendance and the thickness measurement firm's representative(s) so as to ensure the safe and efficient execution of the surveys and thickness measurements to be carried out onboard.

Communication with the thickness measurement operator(s) and owner's representative(s) is to be agreed during the meeting, with respect to the following:

1) reporting of thickness measurements on regular basis to the attending surveyor

2) prompt notification to the surveyor in case of findings:

   A) excessive and/or extensive corrosion or pitting/grooving of any significance
   B) structural defects like buckling, fractures and deformed structures
   C) detached and/or holed structure
   D) corrosion of welds.

When thickness measurements are taken in association with Intermediate or Class Renewal Survey, a documented record indicating where and when the meeting took place and who attended (the name of the surveyor(s), the master of the ship or an appropriately qualified representative appointed by the master or Company, the owner's representative(s) and the representative(s) of the thickness measurement firm(s)) is to be maintained.

1.4 Thickness measurements and close-up surveys

1.4.1 In any kind of survey, i.e. special, intermediate, annual or other surveys having the scope of the foregoing ones, thickness measurements of structures in areas where close-up surveys are required, shall be carried out simultaneously with close-up surveys.

1.4.2 Consideration may be given by the attending Surveyor to allow use of Remote Inspection Techniques (RIT) as an alternative to close-up survey. Surveys conducted using a RIT are to be completed to the satisfaction of the attending Surveyor. When RIT is used for a close-up survey, temporary means of access for the corresponding thickness measurements is to be provided unless such RIT is also able to carry out the required thickness measurements.

Note:
Use of RIT as an alternative to close-up survey is not allowed for ships assigned with the service notation ***Bulk Carrier (ESP)*** *or* ***Bulk Carrier (ESP), BC-A*** *or* ***Bulk Carrier (ESP) BC-B*** *or* ***Bulk Carrier (ESP) BC-C*** *or* ***Self-Unloading Bulk Carrier (ESP)*** *or* ***Ore Carrier (ESP)*** *or* ***Combination Carrier/OBO (ESP)*** *or* ***Oil Tanker (ESP)****.*

1.4.3 For structure built with a material other than steel, alternative thickness measurement requirements may be developed and applied as deemed necessary by BKI

1.4.4 Thickness measurement is normally to be carried out by means of ultrasonic test equipment. The accuracy of the equipment is to be proven to the Surveyor as required in A.7. BKI provides guidance for thickness measurements using ultrasonic test equipment in Petunjuk Pelaksanaan Standar Pengukuran Ketebalan Konstruksi Lambung (Pt.1, Vol.X) which can be used by operators, shipyards and service suppliers.

The thickness measurements are to be carried out by a firm authorized by BKI

2. Thickness measurements and corrosion tolerances

2.1 Validity of an approval granted will depend on the continued qualification. The approval will have to be renewed after a period not exceeding 3 years.

2.2 Monitoring of the thickness measurement process onboard

2.2.1 The surveyor is to decide final extent and location of thickness measurements after overall survey of representative spaces onboard.

2.2.2 In case the owner prefers to commence the thickness measurements prior to the overall survey then the surveyor shall advise that the planned extent and locations of thickness measurements are subject to confirmation during the overall survey. Based on findings, the surveyor may require that additional thickness measurements have to be taken.

2.2.3 The surveyor should direct the gauging operation by selecting locations such that readings taken represent, on average, the condition of the structure for that area.

2.2.4 Thickness measurements taken mainly to evaluate the extent of corrosion, which may affect the hull girder strength, should be carried out in a systematic manner of all longitudinal structural members that are required to be gauged.

During the performance of survey meeting as required in 1.3, BKI will provide information of the required thickness of hull structures, indicating the plate and/or web thickness as stipulated in the Construction Rules. The surveyor is to ensure that this information is available to the owner and/or master of ship in advance prior to the commencement of thickness measurement process.

2.2.5 Where thickness measurements indicate substantial corrosion or wastage in excess of allowable diminution, the surveyor should direct locations for additional thickness measurements in order to delineate areas of substantial corrosion and to identify structural members for repairs/renewals.

Thickness measurements of structures in areas where close-up surveys are required shall be carried out simultaneously with close-up surveys.

2.3 For detail requirements related to control of thickness measurement process onboard, see Guidance for Marine Industry (Pt.1, Vol.AC) Sec.4 R-77

2.4 Corrosion and wear tolerances

2.4.1 The wastage allowance (diminution limits) for plates and stiffeners are shown in Annex A.3.

2.4.2 Where thickness measurements result in corrosion and wear values exceeding those stated in Annex A.3, the respective hull structural elements will have to be renewed.

2.4.3 BKI reserves the right -where applicable- to modify the indicated values according to Annex A.3 referring to the maximum permissible large surface corrosion allowances.

Where reduced material thickness was admitted for the new building (effective system of corrosion prevention), the permissible corrosion allowances are to be based on the unreduced rule thickness.

This page intentionally left blank

Section 4 Surveys

I. Additional Requirements for Ships with ESP Notation 4-1
A. General 4-1
B. Oil Tankers 4-11
C. Double Hull Oil Tankers 4-17
D. Chemical Tankers 4-25
E. Bulk Carriers 4-35
F. Double skin Bulk Carriers 4-50
II. Additional Requirements for Ships Not Subject to ESP Notation 4-62
A. Liquefied Gas Carrier 4-62
B. General Dry Cargo Ships 4-71
C. Shell Doors, Stern Doors, Inner Doors and Bow Doors of Ro-Ro Ships 4-82
D. Livestock Carrier 4-86

I. Additional Requirements for Ships with ESP Notation

A. General

1. Application

1.1 In addition to the requirements specified in Section 3, the requirements in this section apply to hull surveys of ships subject to the Enhanced Survey Programme (ESP) such as bulk carriers, oil tankers and chemical tankers.

2. Procedural requirements for certain ESP surveys

2.1 The objective of this requirements is to improve the quality of surveys. Taking into consideration, the size of vessels and scope of surveys for vessels noted below, it is more effective to have more than one surveyor examine the required spaces, holds or tanks and to provide mutual support and consultation during the surveys in recommending repairs and actions required for conditions of Class.

1) On ships 20,000 tonnes DWT and above, subject to ESP, starting with Class Renewal Survey no. III, all special and intermediate hull classification surveys are to be carried out by at least two exclusive surveyors. On bulk carriers 100,000 DWT and above of single side skin construction the intermediate hull classification survey between 10 and 15 years of age is to be performed by two exclusive surveyors.

2) This requires that at least two exclusive surveyors attend on board at the same time to perform the required survey. Where compatible with relevant laws and regulations, on dual class vessels, the requirement for two surveyors may be fulfilled by having one surveyor attend from each class Society.

3) Though each attending surveyor is not required to perform all aspects of the required survey, they are required to consult with each other and to do joint overall and close-up surveys to the extent necessary to determine the condition of the vessel. The extent of these surveys should be sufficient for the surveyors to agree on actions required to complete the survey with respect to renewals, repairs, and other recommendations or conditions of class. Each surveyor is required to co-sign the survey report or indicate their concurrence in an equivalent manner.

4) The following surveys may be witnessed by a single Surveyor:

   A) Thickness measurements in accordance with Section 3, D;

   B) Tank testing in accordance with the applicable requirement in Section 4;

   C) Repairs carried out in association with Intermediate and Special Hull Classification Survey, the extent of which have been agreed upon by the required two surveyors during the course of the surveys.

5) Surveyors used to fulfill this requirement are to be qualified in the survey processes involved.

6) The onboard attendance of the surveyors is to be documented according to the BKI's procedures

3. Documents to be carried on board

3.1 The owner is to obtain, supply and maintain on board documentation as specified under 3.2 and 3.3 which is to be readily available for the Surveyor. The documentation is to be kept on board for the life time of the ship.

3.2 Survey Report File

1) A Survey Report File is to be part of the documentation on board:

   A) Reports on structural surveys

   B) Executive Hull Summary

   C) Thickness measurements reports

2) The Survey Report File is to be available also in the Owners management office and BKI offices.

3.3 Supporting documents

1) Main structural plan of cargo and ballast tanks

2) Previous damage and repair history

3) Cargo and ballast history

4) Extent of use of inert gas plant and tank cleaning procedures

5) Owner Inspection report with reference to:

   A) Structural deterioration in general

   B) Leakage in bulkheads and piping

   C) Condition of protective coating or corrosion prevention

6) Survey programme as required under A.8 until such time as the Class Renewal Survey or intermediate survey, as applicable, has been completed

7) Any other information that will help to identify critical structural areas and/or suspect areas requiring inspection

8) The updating of the ship construction file (SCF) subject to SOLAS Chapter II-1 part A-1 regulation 3-10 (for ship constructed under CSR rules (Rules for Bulk Carrier and Oil Tanker (Pt.1, Vol.XVII))

3.4 Review of Documentation on Board

Prior to survey, the Surveyor is to examine the completeness of the documentation onboard, and its contents as a basis for the survey.

4. Procedures for Thickness Measurements

4.1 General

4.1.1 The required thickness measurements, if not carried out by BKI itself, are to be witnessed by a BKI Surveyor. The Surveyor is to be on board to the extent necessary to control the process.

4.1.2 The thickness measurement firm is to be part of the survey planning meeting to be held prior to commencing the survey.

4.1.3 Thickness measurements of structures in areas where close-up surveys are required shall be carried out simultaneously with close-up surveys. See Section 3, D.1.4

4.1.4 In all cases the extent of the thickness measurements is to be sufficient as to represent the actual average condition.

4.2 Certification of Thickness Measurement Firm

4.2.1 The thickness measurements are to be carried out by a qualified firm certified by BKI. See Section 3, A.5.3.1.

4.3 Reporting

4.3.1 A thickness measurement report is to be prepared. The report is to give the location of measurements, the thickness measured as well as corresponding original thickness. Furthermore, the report is to give the date when the measurements were carried out, type of measurement equipment, names of personnel and their qualifications and has to be signed by the operator.

4.3.2 The Surveyor is to review the final thickness measurement report and countersign the cover page.

5. Access to Structures

5.1 For overall survey, means are to be provided to enable the surveyor to examine the hull structure in a safe and practical way.

5.2 For Close-Up Surveys in cargo and ballast tanks, one or more of the following means for access, acceptable to the Surveyor, is to be provided:

1) permanent or temporary staging
2) passages through structures
3) hydraulic arm vehicles such as conventional cherry pickers, lifts and moveable platforms
4) boats or rafts
5) portable ladders
6) other equivalent means

5.3 For close-up surveys of the cargo hold shell frames of bulk carriers less than 100,000 DWT, one or more of the following means for access, acceptable to the Surveyor, is to be provided:

1) permanent staging and passages through structures;
2) temporary staging and passages through structures;
3) portable ladder restricted to not more than 5 m in length may be accepted for surveys of lower section of a shell frame including bracket;
4) hydraulic arm vehicles such as conventional cherry pickers, lifts and movable platforms;

5) boats or rafts provided the structural capacity of the hold is sufficient to withstand static loads at all levels of water;

6) other equivalent means.

5.4 For close-up surveys of the cargo hold shell frames of bulk carriers 100,000 DWT and above, the use of portable ladders is not accepted, and one or more of the following means for access, acceptable to the surveyor, is to be provided:

1) Annual Surveys, Intermediate Survey under 10 years of age and Class Renewal Survey No. I

   — permanent staging and passages through structures;
   — temporary staging and passages through structures;
   — hydraulic arm vehicles such as conventional cherry pickers, lifts and movable
   — platforms;
   — boats or rafts provided the structural capacity of the hold is sufficient to withstand
   — static loads at all levels of water;
   — other equivalent means.

2) Subsequent Intermediate Surveys and Class Renewal Surveys:

   — Either permanent or temporary staging and passage through structures for close-up survey of at least the upper part of hold frames;
   — Hydraulic arm vehicles such as conventional cherry pickers for surveys of lower and middle part of shell frames as alternative to staging;
   — lifts and movable platforms;
   — boats or rafts provided the structural capacity of the hold is sufficient to withstand static loads at all levels of water;
   — other equivalent means.

5.5 Notwithstanding the above requirements:

— the use of a portable ladder fitted with a mechanical device to secure the upper end of the ladder is acceptable for the ”close-up examination of sufficient extent, minimum 25% of frames, to establish the condition of the lower region of the shell frames including approx. lower one third length of side frame at side shell and side frame end attachment and the adjacent shell plating of the forward cargo hold” at Annual Survey.

— The use of hydraulic arm vehicles or aerial lifts (“Cherry picker”) may be accepted by the attending surveyor for the close-up survey of the upper part of side shell frames or other structures in all cases where the maximum working height is not more than 17 m.

5.6 For Surveys conducted by use of a remote inspection technique, one or more of the following means for access, acceptable to the Surveyor, is to be provided:

— Unmanned robot arm.

— Remote Operated Vehicles (ROV).

— Unmanned Aerial Vehicles / Drones.

— Other means acceptable to BKI.

6. Survey at Sea or at Anchorage

6.1 Survey at sea or at anchorage may be accepted provided the Surveyor is given the necessary assistance from the personnel onboard. Necessary precautions and procedures for carrying out the survey are to be in accordance with this section.

6.2 A communication system is to be arranged between the survey party in the tank and the responsible officer on deck. This system is also to include the personnel in charge of Ballast pump handling if boats or rafts are used.

6.3 Surveys of tanks by means of boats or rafts may only be undertaken with the agreement of the Surveyor, who is to take into account the safety arrangements provided, including weather forecasting and ship response under foreseeable conditions and provided the expected rise of water within the tank does not exceed 0,25 m.

6.4 When rafts or boats will be used for close-up survey the following conditions are to be observed:

1) only rough duty, inflatable rafts or boats, having satisfactory residual buoyancy and stability even if one chamber is ruptured, are to be used;

2) the boat or raft is to be tethered to the access ladder and an additional person is to be stationed down the access ladder with a clear view of the boat or raft;

3) appropriate lifejackets are to be available for all participants;

4) the surface of water in the tank is to be calm (under all foreseeable conditions the expected rise of water within the tank is to not exceed 0,25 m) and the water level stationary. On no account is the level of the water to be rising while the boat or raft is in use;

5) the tank or space must contain clean ballast water only. Even a thin sheen of oil on the water is not acceptable;

6) at no time is the water level to be allowed to be within 1 m of the deepest under deck web face flat so that the survey team is not isolated from a direct escape route to the tank hatch. Filling to levels above the deck transverses is only to be contemplated if a deck access manhole is fitted and open in the bay being examined, so that an escape route for the survey party is available at all times. Other effective means of escape to the deck may be considered;

7) if the tanks (or spaces) are connected by a common venting system, or Inert Gas system, the tank in which the boat or raft is to be used is to be isolated to prevent a transfer of gas from other tanks (or spaces)[1].

6.5 Rafts or boats alone may be allowed for inspection of the under-deck areas for tanks or spaces, if the depth of the webs is 1,5 m or less.

6.6 If the depth of the webs is more than 1,5 m, rafts or boats alone may be allowed only:

1) when the coating of the under-deck structure is in GOOD condition and there is no evidence of wastage; or

2) if a permanent means of access is provided in each bay to allow safe entry and exit.

   This means:

   A) access direct from the deck via a vertical ladder and a small platform fitted approximately 2 m below the deck in each bay; or

[1] Only applicable for Sub-section B, C and D of this Intermediate Section.

B) access to deck from a longitudinal permanent platform having ladders to deck in each end of the tank. The platform shall, for the full length of the tank, be arranged in level with, or above, the maximum water level needed for rafting of under deck structure. For this purpose, the ullage corresponding to the maximum water level is to be assumed not more than 3 m from the deck plate measured at the mid span of deck transverses and in the middle length of the tank (See Fig. 4-I.1). If neither of the above conditions are met, then staging or an "other equivalent means" is to be provided for the survey of the under-deck areas.

If neither of the above conditions are met, then staging or an "other equivalent means" is to be provided for the survey of the under-deck areas.

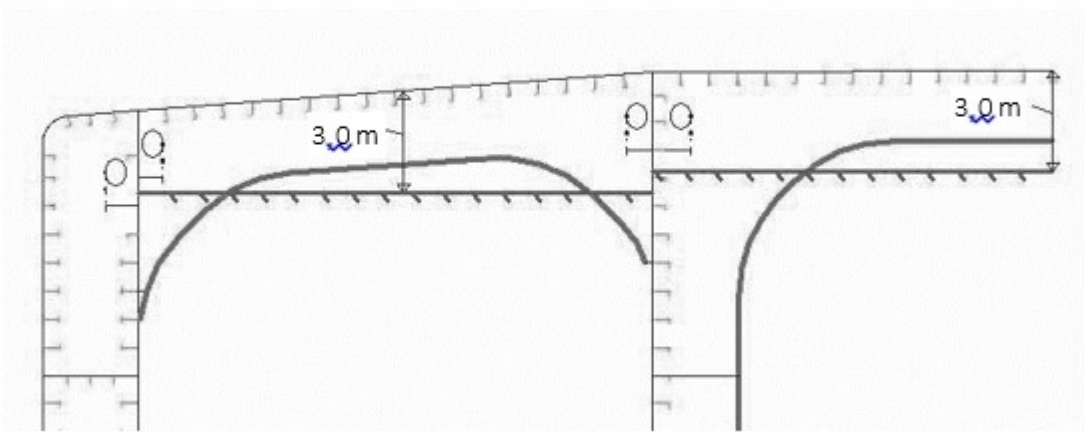

Fig. 4-I.1 Maximum water level in a tank

6.7 The use of rafts or boats alone in paragraphs 6.5 and 6.6 does not preclude the use of boats or rafts to move about within a tank during a survey.

Reference is made to Guidance for Marine Industry (Pt.1, Vol.AC) Sec.2.R-39 - Guidelines for the use of Boats or Rafts for Close-up surveys.

7. Survey Planning Meeting

7.1 Proper preparation and close co-operation between the attending surveyor(s) and the owner's representatives onboard prior to and during the survey are an essential part in the safe and efficient conduct of the survey. During the survey on board safety meetings are to be held regularly.

7.2 Prior to commencement of any part of the renewal and intermediate survey, a survey planning meeting is to be held between the attending surveyor(s), the owner's representative in attendance, the thickness measurement firm operator (as applicable) and the master of the ship or an appropriately qualified representative appointed by the master or Company for the purpose to ascertain that all the arrangements envisaged in the survey programme are in place, so as to ensure the safe and efficient conduct of the survey work to be carried out.

7.3 The following is an indicative list of items that are to be addressed in the meeting:

1) schedule of the vessel (i.e. the voyage, docking and undocking manoeuvres, periods alongside, cargo and ballast operations, etc.);

2) provisions and arrangements for thickness measurements (i.e. access, cleaning/de-scaling, illumination, ventilation, personal safety);

3) extent of the thickness measurements;

4) acceptance criteria (refer to the list of minimum thicknesses);

5) extent of close-up survey and thickness measurement considering the coating condition and suspect areas/areas of substantial corrosion;

6) execution of thickness measurements;

7) taking representative readings in general and where uneven corrosion/pitting is found;

8) mapping of areas of substantial corrosion;

9) communication between attending surveyor(s), the thickness measurement firm operator(s) and owner representative(s) concerning findings.

8. Survey programme

The Owner in cooperation with BKI's surveyor is to work out a specific Survey Programme prior to the commencement of any part of:

1) the Class Renewal Survey

2) the Intermediate Survey for oil tanker over 10 years of age

The Survey Programme is to be in a written format based on the information in Annex B.2.

The survey is not to commence until the survey programme has been agreed. The Survey Programme at Intermediate Survey may consist of the Survey Programme at the previous Class Renewal Survey supplemented by the Executive Hull Summary of that Class Renewal Survey and later relevant survey reports.

8.1 Prior to the development of the survey programme, the survey planning questionnaire is to be completed by the owner based on the information set out in Annex B.3 and forwarded to BKI.

The Survey Programme is to be worked out taking into account any amendments to the survey requirements implemented after the last Class Renewal Survey carried out.

8.2 In developing the survey programme, the following documentation is to be collected and consulted with a view to selecting tanks, areas, and structural elements to be examined:

8.2.1 For Bulk Carriers and Double Skin Bulk Carriers:

1) survey status and basic ship information;

2) documentation on board, as described in 3.2 and 3.3;

3) main structural plans of cargo and ballast tanks (scantlings drawings), including information regarding use of high-tensile steels (HTS);

4) relevant previous damage and repair history;

5) Information regarding the use of the ship's holds and tanks, typical cargoes and other relevant data;

6) Information regarding corrosion prevention level on the new building; and

7) Information regarding the relevant maintenance level during operation.

8.2.2 For Oil Tankers, Chemical Tankers and Double Hull Oil Tankers:

1) survey status and basic ship information;

2) documentation on board, as described in 3.2 and 3.3;

3) main structural plans of cargo and ballast tanks (scantlings drawings), including information regarding use of high-tensile steels (HTS);

4) Executive Hull Summary;

5) relevant previous damage and repair history;

6) relevant previous survey and inspection reports from both the recognized organization and the owner;

7) cargo and ballast history for the last 3 years, including carriage of cargo under heated conditions;

8) details of the inert gas plant and tank cleaning procedures;

9) information and other relevant data regarding conversion or modification of the ship's cargo and ballast tanks since the time of construction;

10) description and history of the coating and corrosion protection system (including previous class notations), if any;

11) inspections by the Owner's personnel during the last 3 years with reference to structural deterioration in general, leakages in tank boundaries and piping and condition of the coating and corrosion protection system if any. Guidance for reporting is shown in Annex B.1.

12) information regarding the relevant maintenance level during operation including port state control reports of inspection containing hull related deficiencies, Safety Management System non-conformities relating to hull maintenance, including the associated corrective action(s); and

13) any other information that will help identify suspect areas and critical structural areas

8.3 The submitted survey programme is to account for and comply, as a minimum, with the requirements of Section 4-I for close-up survey, thickness measurement and tank testing, respectively, and is to include relevant information including at least:

8.3.1 For Bulk Carriers and Double Skin Bulk Carriers:

1) basic ship information and particulars;

2) main structural plans of cargo and ballast tanks (scantling drawings), including information regarding use of high tensile steels (HTS);

3) plan of tanks and holds;

4) list of tanks and holds with information on use, protection and condition of coating;

5) conditions for survey (e.g., information regarding tank cleaning, gas freeing, ventilation, lighting, etc.);

6) provisions and methods for access to structures;

7) equipment for surveys;

8) Nomination of hold and tanks and areas for Close-up Survey;

9) Nominations of sections and areas for thickness measurement;

10) Nomination of tanks for tank pressure testing;

11) Damage experience related to the ship in question.

8.3.2 For Oil Tankers, Chemical Tankers and Double Hull Oil Tankers:

1) basic ship information and particulars;
2) main structural plans of cargo and ballast tanks (scantling drawings), including information regarding use of high tensile steels (HTS);
3) arrangement of tanks;
4) list of tanks with information on their use, extent of coatings and corrosion protection systems;
5) conditions for survey (e.g., information regarding tank cleaning, gas freeing, ventilation, lighting, etc.);
6) provisions and methods for access to structures;
7) equipment for surveys;
8) identification of tanks and areas for close-up survey;
9) identification of areas and sections for thickness measurement;
10) identification of tanks for tank testing;
11) identification of the thickness measurement firm;
12) damage experience related to the ship in question; and
13) critical structural areas and suspect areas, where relevant.

8.4 BKI will advise the Owner of the maximum acceptable structural corrosion diminution levels applicable to the vessel.

8.5 Use may also be made of Technical Assessment in Conjunction with the Planning of Enhanced Surveys for Renewal Survey Hull, contained in Annex B.4. These guidelines are a recommended tool which may be invoked at the discretion of BKI, when considered necessary and appropriate, in conjunction with the preparation of the required Survey Programme.

9. Rescue and emergency response equipment

If breathing apparatus and/or other equipment is used as 'Rescue and emergency response equipment' then it is recommended that the equipment should be suitable for the configuration of the space being surveyed.

10. Conditions of Survey

10.1 The Owner is to provide the necessary facilities for a safe execution of the survey.

10.2 In order to enable the attending surveyors to carry out the survey, provisions for proper and safe access are to be agreed between the owner and BKI and are to be in accordance with Annex A.1 (IACS PR 37, Procedural for Confined Space Safe Entry).

10.3 Details of the means of access are to be provided in the survey planning questionnaire.

10.4 In cases where the provisions of safety and required access are judged by the attending surveyors not to be adequate, the survey of the spaces involved is not to proceed.

10.5 Cargo holds, tanks and spaces are to be safe for access. Cargo holds, tanks and spaces are to be gas free and properly ventilated. Prior to entering a tank, void or enclosed space, it is to be verified that the atmosphere in that space is free from hazardous gas and contains sufficient oxygen.

10.6 In preparation for survey and thickness measurements and to allow for a thorough examination, all spaces are to be cleaned including removal from surfaces of all loose accumulated corrosion scale. Spaces are to be sufficiently clean and free from water, scale, dirt, oil residues etc. to reveal corrosion, deformation, fractures, damages, or other structural deterioration as well as the condition of the coating. However, those areas of structure whose renewal has already been decided by the owner need only be cleaned and descaled to the extent necessary to determine the limits of the areas to be renewed.

10.7 Sufficient illumination is to be provided to reveal corrosion, deformation, fractures, damages or other structural deterioration.

10.8 Where Soft or Semi-Hard Coatings have been applied, safe access is to be provided for the surveyor to verify the effectiveness of the coating and to carry out an assessment of the conditions of internal structures which may include spot removal of the coating. When safe access cannot be provided, the soft or semi-hard coating is to be removed.

11. Equipment for Survey

11.1 Thickness measurement is normally to be carried out by means of ultrasonic test equipment. The accuracy of the equipment is to be proven to the Surveyor as required.

11.2 One or more of the following fracture detection procedures may be required if deemed necessary by the Surveyor:

— radiographic equipment

— ultrasonic equipment

— magnetic particle equipment

— dye penetrant.

11.3 Explosimeter, oxygen-meter, breathing apparatus, lifelines, riding belts with rope and hook and whistles together with instructions and guidance on their use are to be made available during the survey. A safety check-list is to be provided.

11.4 Adequate and safe lighting is to be provided for the safe and efficient conduct of the survey.

11.5 Adequate protective clothing is to be made available and used (e.g. safety helmet, gloves, safety shoes, etc.) during the survey.

12. Reporting and Evaluation of Survey

12.1 Evaluation of Survey Report

.1 The data and information on the structural condition of the vessel collected during the survey is to be evaluated for acceptability and continued structural integrity of the vessel.

.2 In case of oil tankers of 130 m in length and upwards (as defined in the International Convention on Load Lines in force), the ship's longitudinal strength is to be evaluated by using the thickness of structural members measured, renewed and reinforced, as appropriate, during the Class Renewal Survey carried out after the ship reached 10 years of age in accordance with the criteria for longitudinal strength of the ship's hull girder for oil tankers in Annex B.10. However, the only thickness measurement records which have been measured within one (1) year period from the date of the longitudinal strength evaluation shall be considered valid.

.3 For CSR bulk carriers (including Double Skin Bulk Carriers), the ship's longitudinal strength is to be evaluated by using the thickness of structural members measured, renewed and reinforced, as appropriate, during the Class Renewal Surveys carried out after the ship reached 15 years of age (or during the Class Renewal Survey no. III, if this is carried out before the ship reaches 15 years) in accordance with the criteria for longitudinal strength of the ship's hull girder for Rules for CSR bulk carriers specified in Rules for Bulk

Carriers and Oil Tankers (Pt.1, Vol.XVII.B) Pt.1, Ch. 13. However, the only thickness measurement records which have been measured within one (1) year period from the date of the longitudinal strength evaluation shall be considered valid.

.4 The final result of evaluation of the ship's longitudinal strength required in 12.1.2 above, after renewal or reinforcement work of structural members, if carried out as a result of initial evaluation, is to be reported as a part of the Executive Hull Summary.

12.2 Reporting

.1 Principles for survey reporting are shown in Annex B.12.

.2 When a survey is split between different survey stations, a report is to be made for each portion of the survey. A list of items examined and / or tested (pressure testing, thickness measurements etc.) and an indication of whether the item has been credited, are to be made available to the next attending Surveyor(s), prior to continuing or completing the survey.

.3 An Executive Hull Summary of the survey and results is to be issued to the Owner as shown in Annex B.12 and placed on board the vessel for reference at future surveys. The Executive Hull Summary is to be endorsed by BKI's surveyor.

B. Oil Tankers

1. General Requirements

1.1 Application

1.1.1 The following section apply to oil tankers and product carriers more than 500 GT as defined by the Rules for Hull (Pt.1, Vol.II) Sec.24, also to ships intended for the alternative carriage of dry cargo or oil, and to other than double hull oil tankers.

1.1.2 The following requirements apply to surveys of hull structure and piping systems in way of cargo tanks, pump rooms, cofferdams, pipe tunnels, void spaces within the cargo area, and for all ballast tanks on ships with the Qualifier Notation **ESP** additionally to the arrangements in Section 3.

1.1.3 Unless otherwise stated in the following, the arrangements in Section 3 apply.

1.1.4 Definitions of any terms used in this section are in accordance with Annex A.7.

1.2 Extent of surveys

1.2.1 The surveys are to cover all installations, outfit and equipment related to the carriage and handling of oil cargo. They also cover the surveys required by the SOLAS 74 regulations for oil tankers. The protective equipment and the safety equipment required by the SOLAS 74 regulations[2)] for protection of the personnel as well as other equipment and outfit, which are no Class Requirement items, are not covered by the present Rules for Classification and Surveys. These items will, however, be included in the surveys, if compliance with the requirements of an Administration has to be certified.

1.2.2 The following requirements under 2. to 4. defines the minimum extent of examinations. The surveys are to be extended where substantial corrosion and/or structural defects are found and will include an additional Close Up Survey (close visual inspection range, preferably within reach of hand) where deemed necessary by the Surveyor. The surveys are to be extended where substantial corrosion and/or structural defects are found and will include an additional Close Up Survey (close visual inspection range, preferably within reach of hand) where deemed necessary by the Surveyor.

[2)] "International Convention for the Safety of Life at Sea" (1974) and Amendments

2. Annual Surveys

2.1 General

2.1.1 The schedule of Annual Surveys is to be in accordance with the requirements of Section 3, B.1.1.1.

2.1.2 The survey is to consist of an examination for the purpose of ensuring, as far as practicable, that the hull and piping are maintained in a satisfactory condition and should take into account the service history, condition and extent of the corrosion prevention system of ballast tanks and areas identified in the survey report file.

2.2 Examination of the hull

— Examination of the hull plating and its closing appliances as far as can be seen.

— Examination of watertight penetrations as far as practicable.

2.3 Examination of weather deck

— Examination of cargo tank openings including gaskets, covers, coamings and flame screens.

— Examination of cargo tanks pressure/vacuum valves and flame screens.

— Examination of flame screens on vents to all bunker tanks.

— Examination of cargo, crude oil washing, bunker and vent piping systems, including vent masts and headers.

2.4 Examination of Cargo Pump Rooms and Pipe Tunnels, if fitted

— Examination of all pump room bulkheads for signs of oil leakage or fractures and, in particular, the sealing arrangements of all penetrations of pump room bulkheads.

— Examination of the condition of all piping systems.

2.5 Examination of Ballast tanks

2.5.1 Examination of Ballast Tanks where required as a consequence of the results of the Class Renewal Survey and Intermediate Survey is to be carried out.

2.5.2 When considered necessary by the Surveyor, or when extensive corrosion exists, thickness measurements are to be carried out and if the results of these thickness measurements indicate that Substantial Corrosion is found, the extent of thickness measurements is to be increased in accordance with Annex B.5.

These extended thickness measurements are to be carried out before the survey is credited as completed.

2.5.3 Suspect Areas identified at previous surveys are to be examined. Areas of substantial corrosion identified at previous surveys are to have thickness measurements taken.

3. Intermediate Surveys

3.1 General

3.1.1 The schedule of Intermediate Surveys is to be in accordance with the requirements of Section 3, B.1.2.1.

3.1.2 For weather decks, an examination as far as applicable of cargo, crude oil washing, bunker, ballast, steam and vent piping systems as well as vent masts and headers is to be carried out.

3.1.3 If upon examination there is any doubt as to the condition of the piping, the piping may be required to be pressure tested, thickness measured, or both.

3.2 Oil Tankers 5 – 10 years of age, the following is to apply:

3.2.1 All Ballast Tanks are to be examined. When considered necessary by the surveyor, thickness measurement and testing are to be carried out to ensure that the structural integrity remains effective.

3.2.2 Ballast Tank is to be examined at subsequent annual intervals where:

1) a hard-protective coating has not been applied from the time of construction, or
2) a soft or semi-hard coating has been applied, or
3) substantial corrosion is found within the tank, or
4) the hard-protective coating is found to be in less than GOOD condition and the hard-protective coating is not repaired to the satisfaction of the Surveyor.

3.2.3 In addition to the requirements above, suspect areas identified at previous surveys are to be examined.

3.3 Oil Tankers 10 – 15 years of age, the following is to apply:

3.3.1 The requirements of the Intermediate survey are to be to the same extent as the previous Class Renewal Survey as required in 4. and A.8. However, pressure testing of cargo and ballast tanks and the requirements for longitudinal strength evaluation of Hull Girder as required in A.12.1.2 are not required unless deemed necessary by the attending Surveyor.

3.3.2 In application of 3.3.1 above, the Intermediate survey may be commenced at the second annual survey and be progressed during the succeeding year with a view to completion at the third annual survey in lieu of the application of Section 3, B.1.3.1.7).

3.3.3 In application of 3.3.1 above, an underwater survey may be considered in lieu of the requirements of B.4.2.

3.4 Oil Tankers over 15 years of age, the following is to apply:

3.4.1 The requirements of the Intermediate survey are to be to the same extent as the previous Class Renewal Survey as required in 4. and A.8. However, pressure testing of cargo and ballast tanks and the requirements for longitudinal strength evaluation of Hull Girder as required in A.12.1.2 are not required unless deemed necessary by the attending Surveyor.

3.4.2 In application of 3.4.1 above, the Intermediate survey may be commenced at the second annual survey and be progressed during the succeeding year with a view to completion at the third annual survey in lieu of the application of Section 3, B.1.3.1.7).

3.4.3 In application of 3.4.1 above, a survey in dry dock is to be part of the intermediate survey. The overall and close-up surveys and thickness measurements, as applicable, of the lower portions of the cargo tanks and water ballast tanks are to be carried out in accordance with the applicable requirements for intermediate surveys, if not already performed.

Note:
Lower portions of the cargo and ballast tanks are considered to be the parts below light ballast water line.

4. Class Renewal Surveys

4.1 General

4.1.1 The schedule of Class Renewal Surveys is to be in accordance with the requirements of Section 3, B.1.3.1.

4.1.2 The Class Renewal Survey is to include, in addition to the requirements of the Annual Survey, examination, tests and checks of sufficient extent to ensure that the hull and related piping, as required in 4.1.4, is in a satisfactory condition and is fit for its intended purpose for the new period of class of 5 years to be assigned, subject to proper maintenance and operation and to periodical surveys being carried out at the due dates.

4.1.3 All cargo tanks, Ballast Tanks, including double bottom tanks, pump rooms, pipe tunnels, cofferdams and void spaces bounding cargo tanks, decks and outer hull are to be examined, and this examination is to be supplemented by thickness measurement and testing required in 4.5 and 4.6, to ensure that the structural integrity remains effective. The aim of the examination is to discover Substantial Corrosion, significant deformation, fractures, damages or other structural deterioration, that may be present.

4.1.4 Cargo piping on deck, including Crude Oil Washing (COW) piping, Cargo and Ballast piping within the above tanks and spaces are to be examined and operationally tested to working pressure to attending Surveyor's satisfaction to ensure that tightness and condition remain satisfactory. Special attention is to be given to any ballast piping in cargo tanks and cargo piping in ballast tanks and void spaces, and Surveyors are to be advised on all occasions when this piping, including valves and fittings are open during repair periods and can be examined internally.

4.2 Dry Dock Survey

4.2.1 A survey in dry dock is to be a part of the Class Renewal Survey. The overall and close-up surveys and thickness measurements, as applicable, of the lower portions of the cargo tanks and ballast tanks are to be carried out in accordance with the applicable requirements for Class Renewal Surveys, if not already performed.

Note:
Lower portions of the cargo and ballast tanks are considered to be the parts below light ballast water line.

4.3 Tank Protection

4.3.1 Where provided, the condition of the corrosion prevention system of cargo tanks is to be examined.

4.3.2 A Ballast Tank is to be examined at subsequent annual intervals where:

1) a hard-protective coating has not been applied from the time of construction, or
2) a soft or semi-hard coating has been applied, or
3) substantial corrosion is found within the tank, or
4) the hard-protective coating is found to be in less than "GOOD" condition and the hard-protective coating is not repaired to the satisfaction of the Surveyor.

4.3.3 Thickness measurements are to be carried out as deemed necessary by the surveyor.

4.4 Extent of Overall and Close-up Survey

4.4.1 An Overall Survey of all tanks and spaces is to be carried out at each Class Renewal Survey.

4.4.2 The minimum requirements for Close-up Surveys at Class Renewal Survey are given in Table 4-I.1.

4.4.3 The Surveyor may extend the Close-up Survey as deemed necessary taking into account the maintenance of the tanks under survey, the condition of the corrosion prevention system and also in the following cases:

1) In particular, tanks having structural arrangements or details which have suffered defects in similar tanks or on similar ships according to available information.

2) In tanks which have structures approved with reduced scantlings due to an approved corrosion control system.

4.4.4 For areas in tanks where hard protective coatings are found to be in a GOOD, the extent of Close-up Surveys according to Table 4-I.1 may be specially considered.

4.5 Extent of Thickness Measurement

4.5.1 The minimum requirements for thickness measurements at Class Renewal Survey are given in Table 4-I.2.

4.5.2 Provisions for extended measurements for areas with Substantial Corrosion are given in Annex B.5, and as may be additionally specified in the Survey Programme as required by A.8. These extended thickness measurements are to be carried out before the survey is credited as completed. Suspect Areas identified at previous surveys are to be examined. Areas of substantial corrosion identified at previous surveys are to have thickness measurements taken.

4.5.3 The Surveyor may further extend the thickness measurements as deemed necessary.

4.5.4 For areas in tanks where hard protective coating is found to be in a GOOD condition, the extent of thickness measurements according to Table 4-I.2 may be specially considered.

4.5.5 Transverse sections are to be chosen where the largest reductions are suspected to occur or are revealed from deck plating measurements.

4.5.6 In cases where two or three sections are to be measured, at least one is to include a Ballast Tank within 0,5**L** amidships.

4.6 Extent of Tank testing

4.6.1 The minimum requirements for ballast tank testing are given in 4.6.3 and Table 4-I.3, whereas, for cargo tank testing are given in 4.6.4 and Table 4-I.3. The Surveyor may require tank testing to be extended as deemed necessary.

4.6.2 Cargo tank testing carried out by the vessel's crew under the direction of the Master may be accepted by the surveyor provided the following conditions are complied with:

1) a tank testing procedure has been submitted by the owner and reviewed by BKI prior to the testing being carried out;

2) the tank testing is carried out prior to overall survey or close-up survey;

3) the tank testing is carried out within Class Renewal Survey window and not more than 3 months prior to the date on which the overall or close up survey is completed;

4) the tank testing has been satisfactorily carried out and there is no record of leakage, distortion or substantial corrosion that would affect the structural integrity of the tank;

5) the satisfactory results of the testing is recorded in the vessel's logbook;and

6) the internal and external condition of the tanks and associated structure are found satisfactory by the surveyor at the time of the overall and close up survey.

4.6.3 Boundaries of ballast tanks are to be tested with a head of liquid to the top of air pipes.

4.6.4 Boundaries of cargo tanks are to be tested to the highest point that liquid will rise under service conditions.

Table 4-I.1 Minimum Requirements for Close-Up Surveys of Oil Tankers

Class Renewal Survey No. I age ≤5	**Class Renewal Survey No. II 5 < age ≤10**	**Class Renewal Survey No. III 10 < age ≤15**	**Class Renewal Survey No. IV and Subsequent age > 15**
(1) ONE WEB FRAME RING in a ballast wing tank, if any, or a cargo wing tank used primarily for water ballast	(1) ALL WEB FRAME RINGS in a ballast wing tank, if any, or a cargo wing tank used primarily for water ballast	(1) ALL WEB FRAME RINGS in all ballast tanks	As Class Renewal Survey No. III
(2) ONE DECK TRANSVERSE in a cargo oil tank	(2) ONE DECK TRANSVERSE in each of the remaining ballast tanks, if any	(1) ALL WEB FRAME RINGS in a cargo wing tank	Additional transverses included as deemed necessary by BKI
(4) ONE TRANSVERSE BULKHEAD in a ballast tank	(2) ONE DECK TRANSVERSE in a cargo wing tank	(1) A minimum of 30% of all web frame rings in each remaining cargo wing tank (see Note1)	
(4) ONE TRANSVERSE BULKHEAD in a cargo oil wing tank	(2) ONE DECK TRANSVERSE in two cargo centre tanks	(3) ALL TRANSVERSE BULKHEADS in all cargo and ballast tanks	
(4) ONE TRANSVERSE BULKHEAD in a cargo oil centre tank	(3) BOTH TRANSVERSE BULKHEADS in a ballast wing tank, if any, or a cargo wing tank used primarily for water ballast	(5) A minimum of 30% of deck and bottom transverses including adjacent structural members in each cargo centre tank	
	(4) ONE TRANSVERSE BULKHEAD in each remaining ballast tank	(6) As considered necessary by the surveyor	
	(4) ONE TRANSVERSE BULKHEAD in a cargo oil wing tank		
	(4) ONE TRANSVERSE BULKHEAD in two cargo centre tanks		

(1) Complete transverse web frame ring including adjacent structural members
(2) Deck transverse including adjacent deck structural members
(3) Transverse bulkhead complete – including girder system and adjacent structural members
(4) Transverse bulkhead lower part – including girder system and adjacent structural members
(5) Deck and bottom transverse including adjacent structural members
(6) Additional complete transverse web frame ring
***Note 1**: The 30% is to be rounded up to the next whole integer.*

Table 4-I.2 Minimum Requirements for Thickness Measurements of Single Hull Oil Tankers

Class Renewal Survey No. I age ≤ 5	**Class Renewal Survey No. II 5 < age ≤ 10**	**Class Renewal Survey No. III 10 < age ≤ 15**	**Class Renewal Survey No. IVand Subsequent age > 15**
One section of deck plating for the full beam of the ship within the cargo area (in way of ballast tank, if any, or a cargo tank used primarily for water ballast)	Within the cargo area: - each deck plate - one transverse section[1]	Within the cargo area: - each deck plate - two transverse sections[1]	Within the cargo area: - each deck plate - three transverse sections[1] - each bottom plate
Measurements of those structural members subject to Close-Up Survey according to Table 4-I.1, for general assessment and recording of corrosion pattern			
Suspect areas			
	Selected wind and water strakes outside the cargo area		All wind and water strakes full length
		All wind and water strakes within the cargo area	
[1] At least one section is to include a ballast tank within 0,5**L** amidships.			

Table 4-I.3 Minimum Requirements for Tank Testing of Single Hull Oil Tankers

Class Renewal Survey No. I age ≤ 5	**Class Renewal Survey No. II 5 < age ≤ 10**	**Class Renewal Survey No. III 10 < age ≤ 15**	**Class Renewal Survey No. IV and Subsequent age > 15**
All ballast tank boundaries			
Cargo tank boundaries facing ballast tanks, void spaces, pipe tunnels, pump rooms or cofferdams	All cargo tank bulkheads		

C. Double Hull Oil Tankers

1. General Requirements

1.1 Application

1.1.1 The following instructions refer to self-propelled double hull oil tankers and product carriers more than 500 GT as defined by the Rules for Hull (Pt.1, Vol.II) Sec. 24. Also, to ships intended for the alternative carriage of dry cargo or oil.

1.1.2 The following requirements apply to surveys of hull structure and piping systems in way of cargo tanks, pump rooms, cofferdams, pipe tunnels, void spaces within the cargo area, and for all ballast tanks on ships with the Qualifier Notation **ESP** additionally to the arrangements in Section 3.

1.1.3 Unless otherwise stated in the following, the arrangements in Section 3 apply.

1.1.4 Definitions of any terms used in this section are in accordance with Annex A.7.

1.1.5 Additional requirements for survey, assessment and repair of hull structures, see Guidance for Marine Industry (Pt.1, Vol.AC) Sec.5 R-96

1.2 Extent of surveys

1.2.1 The surveys are to cover all installations, outfit and equipment related to the carriage and handling of oil cargo. They also cover the surveys required by the SOLAS 74 regulations for oil tankers. The protective equipment and the safety equipment required by the SOLAS 74 regulations for protection of the personnel as well as other equipment and outfit, which are no Class Requirement items, are not covered by the present

Rules for Classification and Surveys. These items will, however, be included in the surveys, if compliance with the requirements of an Administration has to be certified.

1.2.2 The following requirements under 2. to 4. defines the minimum extent of examinations. The surveys are to be extended where substantial corrosion and/or structural defects are found, and will include an additional Close Up Survey (close visual inspection range, preferably within reach of hand) where deemed necessary by the Surveyor.

2. Annual Surveys

2.1 General

2.1.1 The schedule of Annual Surveys is to be in accordance with the requirements of Section 3, B.1.1.1.

2.1.2 The survey is to consist of an examination for the purpose of ensuring, as far as practicable, that the hull and piping are maintained in a satisfactory condition and should take into account the service history, condition and extent of the corrosion prevention system of ballast tanks and areas identified in the survey report file.

2.2 Examination of the hull

— Examination of the hull plating and its closing appliances as far as can be seen.

— Examination of watertight penetrations as far as practicable.

2.3 Examination of weather deck

— Examination of cargo tank openings including gaskets, covers, coamings and flame screens.

— Examination of cargo tanks pressure/vacuum valves and flame screens.

— Examination of flame screens on vents to all bunker tanks.

— Examination of cargo, crude oil washing, bunker and vent piping systems, including vent masts and headers.

2.4 Examination of Cargo Pump Rooms and Pipe Tunnels, if fitted

— Examination of all pump room bulkheads for signs of oil leakage or fractures and, in particular, the sealing arrangements of all penetrations of pump room bulkheads.

— Examination of the condition of all piping systems.

2.5 Examination of Ballast tanks

2.5.1 Examination of Ballast Tanks where required as a consequence of the results of the Class Renewal Survey and Intermediate Survey is to be carried out.

2.5.2 When considered necessary by the Surveyor, or when extensive corrosion exists, thickness measurements are to be carried out and if the results of these thickness measurements indicate that Substantial Corrosion is found, the extent of thickness measurements is to be increased in accordance with Annex B.5.

These extended thickness measurements are to be carried out before the survey is credited as completed.

2.5.3 Suspect Areas identified at previous surveys are to be examined. Areas of substantial corrosion identified at previous surveys are to have thickness measurements taken.

2.5.4 For vessels built under IACS Common Structural Rules, the identified substantial corrosion areas are required to be examined and additional thickness measurements are to be carried out.

3. Intermediate Surveys

3.1 General

3.1.1 The schedule of Intermediate Surveys is to be in accordance with the requirements of Section 3, B.1.2.1.

3.1.2 For weather decks, an examination as far as applicable of cargo, crude oil washing, bunker, ballast, steam and vent piping systems as well as vent masts and headers is to be carried out.

3.1.3 If upon examination there is any doubt as to the condition of the piping, the piping may be required to be pressure tested, thickness measured, or both.

3.1.4 For vessels built under Rules for Bulk Carrier and Oil Tanker (Pt.1, Vol.XVII), the identified substantial corrosion areas are required to be examined and additional thickness measurements are to be carried out.

3.2 Double Hull Oil Tankers 5 – 10 years of age, the following is to apply:

3.2.1 For tanks used for salt-water ballast, an Overall Survey of Representative Tanks selected by the Surveyor is to be carried out.

If such inspections reveal no visible structural defects, the examination may be limited to a verification that the hard-protective coating remains in “GOOD” condition.

3.2.2 Ballast Tank is to be examined at subsequent annual intervals where:

1) a hard-protective coating has not been applied from the time of construction, or
2) a soft or semi-hard coating has been applied, or
3) substantial corrosion is found within the tank, or
4) the hard-protective coating is found to be in less than “GOOD” condition and the hard-protective coating is not repaired to the satisfaction of the Surveyor.

3.2.3 In addition to the requirements above, suspect areas identified at previous surveys are to be examined.

3.3 Double Hull Oil Tankers 10 – 15 years of age, the following is to apply:

3.3.1 The requirements of the Intermediate survey are to be to the same extent as the previous Class Renewal Survey as required in 4. and A.8. However, pressure testing of cargo and ballast tanks and the requirements for longitudinal strength evaluation of Hull Girder as required in A.12.1.2 are not required unless deemed necessary by the attending Surveyor.

3.3.2 In application of 3.3.1 above, the Intermediate survey may be commenced at the second annual survey and be progressed during the succeeding year with a view to completion at the third annual survey in lieu of the application of Section 3, B.1.3.1.7).

3.3.3 In application of 3.3.1 above, an underwater survey may be considered in lieu of the requirements of 4.2.

3.4 Double Hull Oil Tankers over 15 years of age, the following is to apply:

3.4.1 The requirements of the Intermediate survey are to be to the same extent as the previous Class Renewal Survey as required in 4. and A.8. However, pressure testing of cargo and ballast tanks and the requirements for longitudinal strength evaluation of Hull Girder as required in A.12.1.2 are not required unless deemed necessary by the attending Surveyor.

3.4.2 In application of 3.4.1 above, the Intermediate survey may be commenced at the second annual survey and be progressed during the succeeding year with a view to completion at the third annual survey in lieu of the application of Section 3, B.1.3.1.7).

3.4.3 In application of 3.4.1 above, a survey in dry dock is to be part of the intermediate survey. The overall and close-up surveys and thickness measurements, as applicable, of the lower portions of the cargo tanks and water ballast tanks are to be carried out in accordance with the applicable requirements for intermediate surveys, if not already performed.

Note:
Lower portions of the cargo and ballast tanks are considered to be the parts below light ballast water line.

4. Class Renewal Surveys

4.1 General

4.1.1 The schedule of Class Renewal Surveys is to be in accordance with the requirements of Section 3, B.1.3.1.

4.1.2 The Class Renewal Survey is to include, in addition to the requirements of the Annual Survey, examination, tests and checks of sufficient extent to ensure that the hull and related piping, as required in 4.1.4, is in a satisfactory condition and is fit for its intended purpose for the new period of class of 5 years to be assigned, subject to proper maintenance and operation and to periodical surveys being carried out at the due dates.

4.1.3 All cargo tanks, Ballast Tanks, including double bottom tanks, pump rooms, pipe tunnels, cofferdams and void spaces bounding cargo tanks, decks and outer hull are to be examined, and this examination is to be supplemented by thickness measurement and testing required in 4.5 and 4.6, to ensure that the structural integrity remains effective. The aim of the examination is to discover Substantial Corrosion, significant deformation, fractures, damages or other structural deterioration, that may be present.

4.1.4 Cargo piping on deck, including Crude Oil Washing (COW) piping, Cargo and Ballast piping within the above tanks and spaces are to be examined and operationally tested to working pressure to attending Surveyor's satisfaction to ensure that tightness and condition remain satisfactory. Special attention is to be given to any ballast piping in cargo tanks and cargo piping in ballast tanks and void spaces, and Surveyors are to be advised on all occasions when this piping, including valves and fittings are open during repair periods and can be examined internally.

4.2 Dry Dock Survey

4.2.1 A survey in dry dock is to be a part of the Class Renewal Survey. The overall and close-up surveys and thickness measurements, as applicable, of the lower portions of the cargo tanks and ballast tanks are to be carried out in accordance with the applicable requirements for Class Renewal Surveys, if not already performed.

Note:
Lower portions of the cargo and ballast tanks are considered to be the parts below light ballast water line.

4.3 Tank Protection

4.3.1 Where provided, the condition of the corrosion prevention system of cargo tanks is to be examined.

4.3.2 A Ballast Tank is to be examined at subsequent annual intervals where:

1) a hard-protective coating has not been applied from the time of construction, or

2) a soft or semi-hard coating has been applied, or

3) substantial corrosion is found within the tank, or

4) the hard-protective coating is found to be in less than GOOD condition and the hard-protective coating is not repaired to the satisfaction of the Surveyor.

4.3.3 Thickness measurements are to be carried out as deemed necessary by the surveyor.

4.4 Extent of Overall and Close-up Survey

4.4.1 An Overall Survey of all tanks and spaces is to be carried out at each Class Renewal Survey.

4.4.2 The minimum requirements for Close-up Surveys at Class Renewal Survey are given in Table 4-I.4.

4.4.3 The Surveyor may extend the Close-up Survey as deemed necessary taking into account the maintenance of the tanks under survey, the condition of the corrosion prevention system and also in the following cases:

1) In particular, tanks having structural arrangements or details which have suffered defects in similar tanks or on similar ships according to available information.

2) In tanks which have structures approved with reduced scantlings due to an approved corrosion control system.

4.4.4 For areas in tanks where hard protective coatings are found to be in a GOOD, the extent of Close-up Surveys according to Table 4-I.4 may be specially considered.

4.5 Extent of Thickness Measurement

4.5.1 The minimum requirements for thickness measurements at Class Renewal Survey are given in Table 4-I.5.

4.5.2 Provisions for extended measurements for areas with Substantial Corrosion are given in Annex B.5, and as may be additionally specified in the Survey Programme as required by A.8. These extended thickness measurements are to be carried out before the survey is credited as completed. Suspect Areas identified at previous surveys are to be examined. Areas of substantial corrosion identified at previous surveys are to have thickness measurements taken.

For vessels built under IACS Common Structural Rules, the identified substantial corrosion areas are required to be examined and additional thickness measurements are to be carried out at annual and intermediate surveys.

4.5.3 The Surveyor may further extend the thickness measurements as deemed necessary.

4.5.4 For areas in tanks where hard protective coating are found to be in a GOOD condition, the extent of thickness measurements according to Table 4-I.5 may be specially considered.

4.5.5 Transverse sections are to be chosen where the largest reductions are suspected to occur or are revealed from deck plating measurements.

4.5.6 In cases where two or three sections are to be measured, at least one is to include a Ballast Tank within 0,5**L** amidships.

4.6 Extent of Tank testing

4.6.1 The minimum requirements for ballast tank testing are given in 4.6.3 and Table 4-I.6, whereas, for cargo tank testing are given in 4.6.4 and Table 4-I.6. The Surveyor may require tank testing to be extended as deemed necessary.

4.6.2 Cargo tank testing carried out by the vessel's crew under the direction of the Master may be accepted by the surveyor provided the following conditions are complied with:

1) a tank testing procedure has been submitted by the owner and reviewed by BKI prior to the testing being carried out;

2) the tank testing is carried out prior to overall survey or close-up survey;

3) the tank testing is carried out within Class Renewal Survey window and not more than three months prior to the date on which the overall or close up survey is completed;

4) the tank testing has been satisfactorily carried out and there is no record of leakage, distortion or substantial corrosion that would affect the structural integrity of the tank;

5) the satisfactory results of the testing is recorded in the vessel's logbook; and

6) the internal and external condition of the tanks and associated structure are found satisfactory by the surveyor at the time of the overall and close up survey.

4.6.3 Boundaries of ballast tanks are to be tested with a head of liquid to the top of air pipes.

4.6.4 Boundaries of cargo tanks are to be tested to the highest point that liquid will rise under service conditions.

4.6.5 The testing of double bottom tanks and other spaces not designed for the carriage of liquid may be omitted, provided a satisfactory internal examination together with an examination of the tanktop is carried out.

Table 4-I.4 Class Renewal Surveys of Double Hull Oil Tankers, Ore/Oil Ships etc. Minimum Requirements for Close-Up Surveys

Class Renewal Survey No. I age ≤ 5	Class Renewal Survey No. II 5 < age ≤ 10	Class Renewal Survey No. III 10 < age ≤ 15	Class Renewal Survey No. IV and Subsequent age > 15
One web frame (1), in a ballast tank (see Note 1)	All web frames (1), in a ballast tank (see Note 1) The knuckle area and the upper part (5 metres approximately) of one web frame in each remaining ballast tank (6)	All web frames (1), in all ballast tanks	As for Class Renewal Survey for age from 10 to 15 years Additional transverse areas as deemed necessary by BKI
One deck transverse, in a cargo oil tank (2)	One deck transverse, in two cargo oil tanks (2)	All web frames (7), including deck transverse and cross ties, if fitted, in a cargo oil tank One web frame (7), including deck transverse and cross ties, if fitted, in each remaining cargo oil tank	
One transverse bulkhead (4), in a ballast tank (see Note 1)	One transverse bulkhead (4), in each ballast tank (see Note 1)	All transverse bulkheads, in all cargo oil (3) and ballast (4) tanks	
One transverse bulkhead (5), in a cargo oil centre tank One transverse bulkhead (5), in a cargo oil wing tank (see Note 2)	One transverse bulkhead (5), in two cargo oil centre tanks One transverse bulkhead (5), in a cargo oil wing tank (see Note 2)		

(1), (2), (3), (4), (5), (6) and (7) are areas to be subjected to close-up surveys and thickness measurements (see Fig. 4-I.2 and 4-I.3).

(1): Web frame in a ballast tank means vertical web in side tank, hopper web in hooper tank, floor in double bottom tank and deck transverse in double deck tank (where fitted), including adjacent structural members. In fore and aft peak tanks web frame means a complete transverse web frame ring including adjacent structural members

(2): Deck transverse, including adjacent deck structural members (or external structure on deck in way of the tank, where applicable)

(3): Transverse bulkhead complete in cargo tanks, including girder system, adjacent structural members (such as longitudinal bulkheads) and internal structure of lower and upper stools, where fitted

(4): Transverse bulkhead complete in ballast tanks, including girder system and adjacent structural members, such as longitudinal bulkheads, girders in double bottom tanks, inner bottom plating, hopper side, connecting brackets

(5): Transverse bulkhead lower part in cargo tank, including girder system, adjacent structural members (such as longitudinal bulkheads) and internal structure of lower stool, where fitted

(6): The knuckle area and the upper part (5 metres approximately), including adjacent structural members. Knuckle area is the area of the web frame around the connections of the slope hopper plating to the inner hull bulkhead and the inner bottom plating, up to 2 metres from the corners both on the bulkhead and the double bottom

(7): Web frame in a cargo oil tank means deck transverse, longitudinal bulkhead structural elements and cross ties, where fitted, including adjacent structural members

Note 1:

Ballast tank: Apart from the fore and aft peak tanks, the term "ballast tank"" has the following meaning:

.1 all ballast compartments (hopper tank, side tank and double-deck tank, if separate from double-bottom tank) located on one side, i.e. portside or starboard side, and additionally double-bottom tank on portside plus starboard side, when the longitudinal central girder is not watertight and, therefore, the double-bottom tank is a unique compartment from portside to starboard side; or

.2 all ballast compartments (double-bottom tank, hopper tank, side tank and double-deck tank) located on one side, i.e. portside or starboard side, when the longitudinal central girder is watertight and, therefore, the portside double-bottom tank separate from the starboard-side double-bottom tank.

Note 2:

Where no centre cargo tanks are fitted (as in case of centre longitudinal bulkhead), transverse bulkheads in wing tanks are to be surveyed

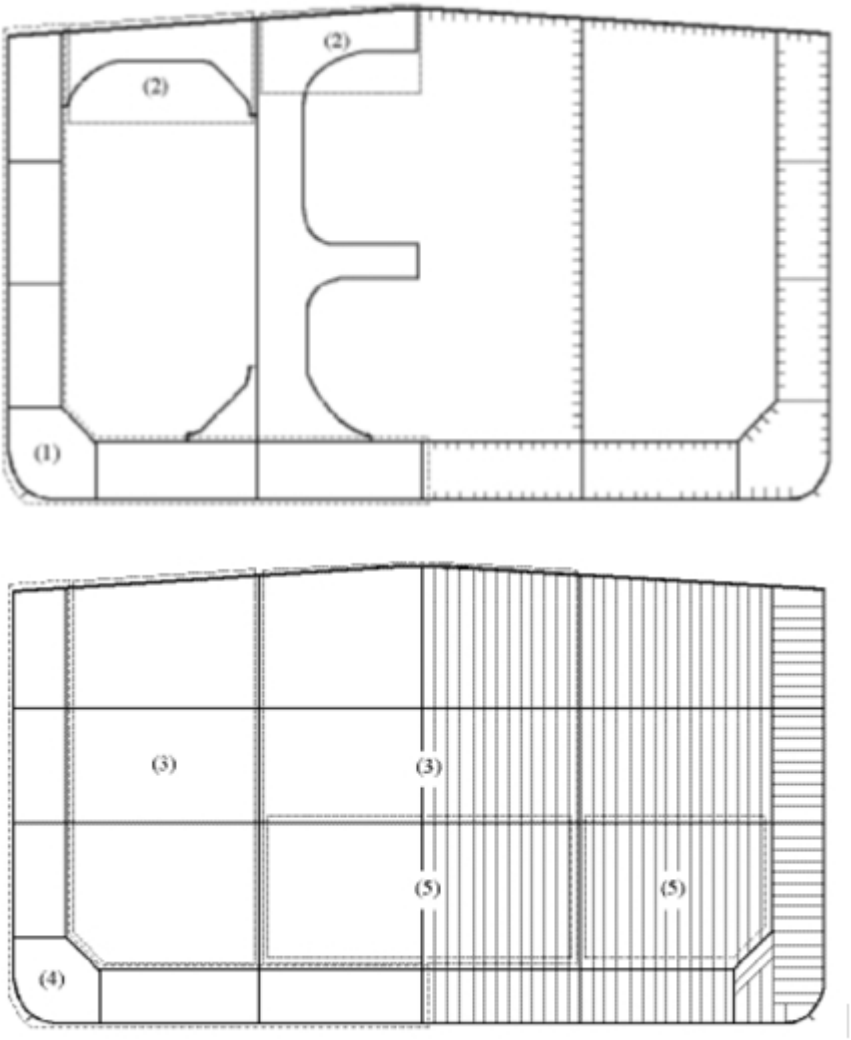

Fig. 4-I.2 Close up survey requirements for Double hull Oil Tankers. Areas (1) to (5)

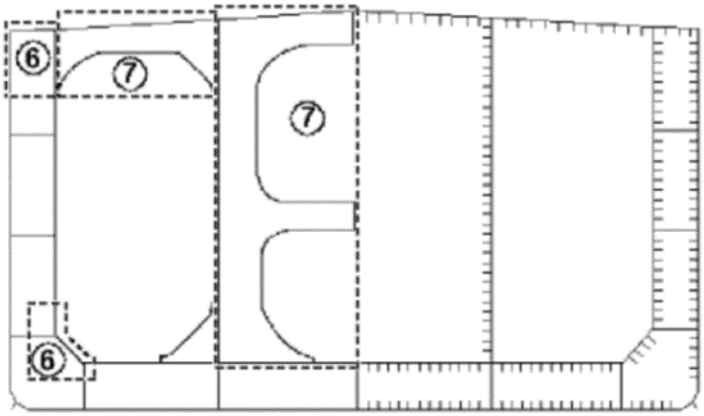

Fig. 4-I.3 Close up survey requirements for Double hull Oil Tankers. Areas (6) and (7)

Table 4-I.5 Class Renewal Surveys of Double Hull Oil Tankers, Oil Ships etc. Minimum Requirements for Thickness Measurements

Class Renewal Survey No. I age ≤ 5	Class Renewal Survey No. II 5 < age ≤ 10	Class Renewal Survey No. III 10 < age ≤ 15	Class Renewal Survey No. IV and Subsequent age > 15
1. Suspect areas	1. Suspect areas	1. Suspect areas	1. Suspect areas
	2. Within the cargo area: .1 Each deck plate .2 One transverse section	2. Within the cargo area: .1 Each deck plate .2 Two transverse sections[(1)] .3 All wind and water strakes	2. Within the cargo area: .1 Each deck plate .2 Three transverse sections[(1)] .3 Each bottom plate
	3. Selected wind and water strakes outside the cargo area	3. Selected wind and water strakes outside the cargo area	3. All wind and water strakes, full length
	4. Measurements, for general assessment and recording of corrosion pattern, of those structural members subject to close-up survey according to Table 4-I.4.	4. Measurements, for general assessment and recording of corrosion pattern, of those structural members subject to close-up survey according to Table 4-I.4.	4. Measurements, for general assessment and recording of corrosion pattern, of those structural members subject to close-up survey according to Table 4-I.4.
[(1)] at least one section is to include a ballast tank within 0,5**L** amidships.			

Table 4-I.6 Class Renewal Surveys of Double Hull Oil Tankers, Oil Ships, etc. Minimum Requirements for Tank Testing

Class Renewal Survey [No.] and ship's age [years]			
I. age ≤ 5	**II. 5 < age ≤ 10**	**III. 10 < age ≤ 15**	**IV. and subsequent, age > 15**
All ballast tank boundaries			
Cargo tank boundaries facing ballast tanks, void spaces, pipe tunnels, pump rooms or cofferdams	All cargo tank bulkheads		

D. Chemical Tankers

1. General requirements

1.1 Application

1.1.1 The following requirements apply to all self-propelled Chemical tankers more than 500 GT with integral tanks as defined in the Rules for Ships Carrying Dangerous Chemicals in Bulk (Pt.1, Vol.X).

If a chemical tanker is constructed with both integral and independent tanks, these requirements are applicable only to that portion of the cargo length containing integral tanks. Combined gas carriers/chemical tankers with independent tanks within the hull, are to be surveyed as gas carriers.

1.1.2 The requirements apply to surveys of hull structure and piping systems in way of cargo tanks, pump rooms, cofferdams, pipe tunnels, void spaces within the cargo area and all Ballast Tanks. The requirements are not applicable for independent tanks on deck.

1.1.3 Unless otherwise stipulated in the following, the requirements of Section 3 apply.

1.1.4 In the case of chemical tankers also qualified as oil or product carriers, additionally, requirements in B. are to be observed.

1.1.5 Definitions of any terms used in this section are in accordance with Annex A.7.

1.2 Extent of surveys

1.2.1 The surveys are to cover all installations, outfit and equipment related to the carriage and handling of chemicals. They also cover the surveys required by the IMO Codes for Chemical Tankers [3].

1.2.2 The protective equipment and the safety equipment required by the Codes for protection of the personnel as well as other equipment and outfit which are no class requirement items are not covered by the present Rules for Classification and Surveys. These items will, however, be included in the surveys, if compliance with the requirements of an Administration has to be certified, see also the Rules for Ships Carrying Dangerous Chemicals in Bulk (Pt.1, Vol.X).

1.2.3 Reference should be made to the procedures stated in the IBC Code regarding the authorization of recognized institutions, surveys and issuance, validity and extension of certificates. The "Certificate of Fitness" required for chemical tankers is issued either by the Administration of the vessel's flag state or by BKI if authorized by the respective flag state.

1.2.4 The following defines the minimum extent of examinations. The surveys shall be extended where substantial corrosion and/or structural defects are found and will include an additional Close Up Survey (close visual inspection range, preferably within reach of hand) where deemed necessary by the Surveyor.

2. Annual Surveys

2.1 General

2.1.1 The schedule of Annual Surveys is to be in accordance with the requirements of Section 3, B.1.1.1.

2.1.2 The survey is to consist of an examination for the purpose of ensuring, as far as practicable, that the hull and piping are maintained in a satisfactory condition and should take into account the service history, condition and extent of the corrosion prevention system of ballast tanks and areas identified in the survey reports file.

2.2 Examination of the hull

— Examination of the hull plating and its closing appliances as far as can be seen.

— Examination of watertight penetrations as far as practicable.

2.3 Examination of weather deck

— Examination of cargo tank openings including gaskets, covers, coamings and flame screens.

— Examination of cargo tanks pressure/vacuum valves and flame screens.

— Examination of flame screens on vents to all bunker tanks.

— Examination of cargo, crude oil washing, bunker and vent piping systems, including vent masts and headers.

2.4 Examination of Cargo Pump Rooms and Pipe Tunnels, if fitted

— Examination of all pump room bulkheads for signs of oil leakage or fractures and, in particular, the sealing arrangements of all penetrations of pump room bulkheads.

— Examination of the condition of all piping systems.

[3] "Code for the Construction and Equipment of Ships Carrying Dangerous Chemicals in Bulk" (BCH Code) for ships the keels of which were laid on or after 12.4.1972, and with some limitations, also for ships built before that date; "International Code for the Construction and Equipment of Ships Carrying Dangerous Chemicals in Bulk" (IBC Code) for ships, the keels of which were laid on or after 1.7.1986. The IBC Code is also part of the MARPOL Convention (Annex II), and of the SOLAS Convention 1974 (Chapter VII).

2.5 Examination of Ballast tanks

2.5.1 Examination of Ballast Tanks where required as a consequence of the results of the Class Renewal Survey and Intermediate Survey is to be carried out.

2.5.2 When considered necessary by the Surveyor, or when extensive corrosion exists, thickness measurements are to be carried out and if the results of these thickness measurements indicate that Substantial Corrosion is found, the extent of thickness measurements is to be increased in accordance with Annex B.5.

These extended thickness measurements are to be carried out before the survey is credited as completed.

2.5.3 Suspect Areas identified at previous surveys are to be examined. Areas of substantial corrosion identified at previous surveys are to have thickness measurements taken.

3. Intermediate Surveys

3.1 General

3.1.1 The schedule of Intermediate Surveys is to be in accordance with the requirements of Section 3, B.1.2.1.

3.1.2 For weather decks, an examination as far as applicable of cargo, crude oil washing, bunker, ballast, steam and vent piping systems as well as vent masts and headers is to be carried out.

3.1.3 If upon examination there is any doubt as to the condition of the piping, the piping may be required to be pressure tested, thickness measured, or both.

3.2 Chemical Tankers 5 – 10 years of age, the following is to apply:

3.2.1 For ballast tanks, an Overall Survey of Representative Tanks selected by the Surveyor is to be carried out. If such inspections reveal no visible structural defects, the examination may be limited to a verification that the hard-protective coating remains in GOOD condition.

3.2.2 Ballast Tank is to be examined at subsequent annual intervals where:

1) a hard-protective coating has not been applied from the time of construction, or
2) a soft or semi-hard coating has been applied, or
3) substantial corrosion is found within the tank, or
4) the hard-protective coating is found to be in less than GOOD condition and the hard-protective coating is not repaired to the satisfaction of the Surveyor.

3.2.3 In addition to the requirements above, suspect areas identified at previous surveys are to be examined.

3.3 Chemical Tankers 10 – 15 years of age, the following is to apply:

3.3.1 The requirements of the Intermediate survey are to be to the same extent as the previous Class Renewal Survey as required in 4. and A.8. However, pressure testing of cargo and ballast tanks and the requirements for longitudinal strength evaluation of Hull Girder as required in A.12.1.2 are not required unless deemed necessary by the attending Surveyor.

3.3.2 In application of 3.3.1 above, the Intermediate survey may be commenced at the second annual survey and be progressed during the succeeding year with a view to completion at the third annual survey in lieu of the application of Section 3, B.1.3.1.7).

3.3.3 In application of 3.3.1 above, an underwater survey may be considered in lieu of the requirements of 4.2.

3.4 Chemical Tankers over 15 years of age, the following is to apply:

3.4.1 The requirements of the Intermediate survey are to be to the same extent as the previous Class Renewal Survey as required in 4. and A.8. However, pressure testing of cargo and ballast tanks and the requirements for longitudinal strength evaluation of Hull Girder as required in A.12.1.2 are not required unless deemed necessary by the attending Surveyor.

3.4.2 In application of 3.4.1 above, the Intermediate survey may be commenced at the second annual survey and be progressed during the succeeding year with a view to completion at the third annual survey in lieu of the application of Section 3, B.1.3.1.7).

3.4.3 In application of 3.4.1 above, a survey in dry dock is to be part of the intermediate survey. The overall and close-up surveys and thickness measurements, as applicable, of the lower portions of the cargo tanks and water ballast tanks are to be carried out in accordance with the applicable requirements for intermediate surveys, if not already performed.

Note:
Lower portions of the cargo and ballast tanks are considered to be the parts below light ballast water line.

4. Class Renewal Surveys

4.1 General

4.1.1 The schedule of Class Renewal Surveys is to be in accordance with the requirements of Section 3, B.1.3.1.

4.1.2 The Class Renewal Survey is to include, in addition to the requirements of the Annual Survey, examination, tests and checks of sufficient extent to ensure that the hull and related piping, as required in 4.1.4, is in a satisfactory condition and is fit for its intended purpose for the new period of class of 5 years to be assigned, subject to proper maintenance and operation and to periodical surveys being carried out at the due dates.

4.1.3 All cargo tanks, Ballast Tanks, including double bottom tanks, pump rooms, pipe tunnels, cofferdams and void spaces bounding cargo tanks, decks and outer hull are to be examined, and this examination is to be supplemented by thickness measurement and testing required in 4.5 and 4.6, to ensure that the structural integrity remains effective. The aim of the examination is to discover Substantial Corrosion, significant deformation, fractures, damages or other structural deterioration, that may be present.

4.1.4 Cargo piping on deck and Cargo and Ballast piping within the above tanks and spaces are to be examined and operationally tested to working pressure to attending Surveyor's satisfaction to ensure that tightness and condition remain satisfactory. Special attention is to be given to any ballast piping in cargo tanks and cargo piping in ballast tanks and void spaces, and Surveyors are to be advised on all occasions when this piping, including valves and fittings are open during repair periods and can be examined internally.

4.2 Dry Dock Survey

4.2.1 A survey in dry dock is to be a part of the Class Renewal Survey. The overall and close-up surveys and thickness measurements, as applicable, of the lower portions of the cargo tanks and ballast tanks are to be carried out in accordance with the applicable requirements for Class Renewal Surveys, if not already performed.

Note:
Lower portions of the cargo and ballast tanks are considered to be the parts below light ballast water line.

4.3 Tank Protection

4.3.1 Where provided, the condition of the corrosion prevention system of cargo tanks is to be examined.

4.3.2 A Ballast Tank is to be examined at subsequent annual intervals where:

1) a hard-protective coating has not been applied from the time of construction, or

2) a soft or semi-hard coating has been applied, or

3) substantial corrosion is found within the tank, or

4) the hard-protective coating is found to be in less than GOOD condition and the hard-protective coating is not repaired to the satisfaction of the Surveyor.

4.3.3 Thickness measurements are to be carried out as deemed necessary by the surveyor.

4.4 Extent of Overall and Close-up Survey

4.4.1 An Overall Survey of all tanks and spaces is to be carried out at each Class Renewal Survey.

4.4.2 The minimum requirements for Close-up Surveys at Class Renewal Survey are given in Table 4-I.7.

4.4.3 The Surveyor may extend the Close-up Survey as deemed necessary taking into account the maintenance of the tanks under survey, the condition of the corrosion prevention system and also in the following cases:

1) In particular, tanks having structural arrangements or details which have suffered defects in similar tanks or on similar ships according to available information.

2) In tanks which have structures approved with reduced scantlings due to an approved corrosion control system.

4.4.4 For areas in tanks where hard protective coatings are found to be in a GOOD, the extent of Close-up Surveys according to Table 4-I.7 may be specially considered.

4.5 Extent of Thickness Measurement

4.5.1 The minimum requirements for thickness measurements at Class Renewal Survey are given in Table 4-I.8.

4.5.2 Provisions for extended measurements for areas with Substantial Corrosion are given in Annex B.5, and as may be additionally specified in the Survey Programme as required by A.8. These extended thickness measurements are to be carried out before the survey is credited as completed. Suspect Areas identified at previous surveys are to be examined. Areas of substantial corrosion identified at previous surveys are to have thickness measurements taken.

4.5.3 The Surveyor may further extend the thickness measurements as deemed necessary.

4.5.4 For areas in tanks where hard protective coating are found to be in a GOOD condition, the extent of thickness measurements according to Table 4-I.8 may be specially considered.

4.5.5 Transverse sections are to be chosen where the largest reductions are suspected to occur or are revealed from deck plating measurements.

4.5.6 In cases where two or three sections are to be measured, at least one is to include a Ballast Tank within 0,5**L** amidships.

4.6 Extent of Tank testing

4.6.1 The minimum requirements for ballast tank testing are given in 4.6.2 and Table 4-I.9, whereas, for cargo tank testing are given in 4.6.3 and Table 4-I.9. The Surveyor may require tank testing to be extended as deemed necessary.

4.6.2 Cargo tank testing carried out by the vessel's crew under the direction of the Master may be accepted by the surveyor provided the following conditions are complied with:

1) a tank testing procedure has been submitted by the owner and reviewed by BKI prior to the testing being carried out;

2) there is no record of leakage, distortion or substantial corrosion that would affect the structural integrity of the tank;

3) the tank testing has been satisfactorily carried out within Class Renewal Survey window not more than 3 months prior to the date of the survey on which the overall or close up survey is completed;

4) the satisfactory results of the testing is recorded in the vessel's logbook;

5) the internal and external condition of the tanks and associated structure are found satisfactory by the surveyor at the time of the overall and close up survey.

4.6.3 Boundaries of ballast tanks are to be tested with a head of liquid to the top of air pipes.

4.6.4 Boundaries of cargo tanks are to be tested to the highest point that liquid will rise under service conditions.

4.6.5 The testing of double bottom tanks and other spaces not designed for the carriage of liquid may be omitted, provided a satisfactory internal examination together with an examination of the tanktop is carried out.

4.7 Chemical Tankers over 10 years of age

4.7.1 Selected steel cargo pipes outside cargo tanks and ballast pipes passing through cargo tanks are to be:

1) Thickness measured at random or selected pipe lengths to be opened for internal inspection;

2) Pressure tested to the maximum working pressure.

4.7.2 Special attention is to be given to cargo/slop discharge piping through Ballast Tanks and void spaces.

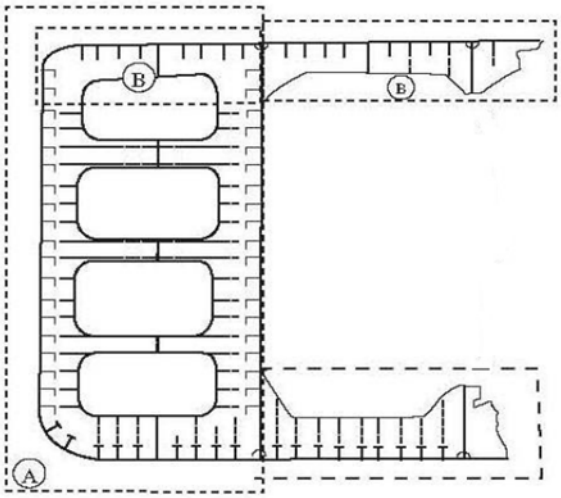

Representative transverse section of chemical tanker. Areas **(A)** and **(B)**.

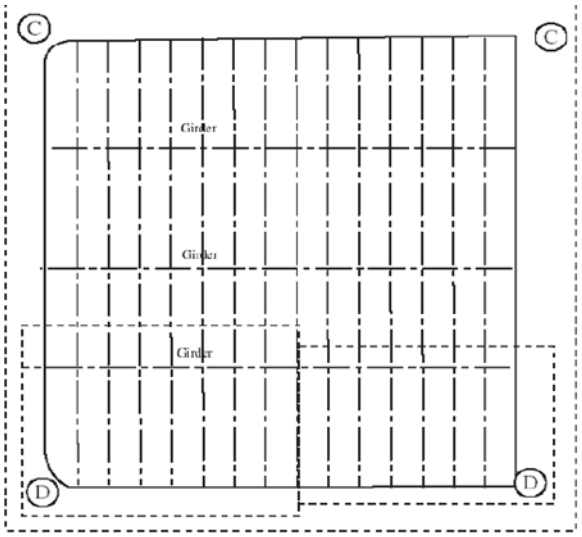

Representative transverse bulkhead of chemical tanker. Areas **(C)** and **(D)**.

Fig. 4-I.4 Areas (A), (B), (C), (D) for close up survey of single skin chemical tankers

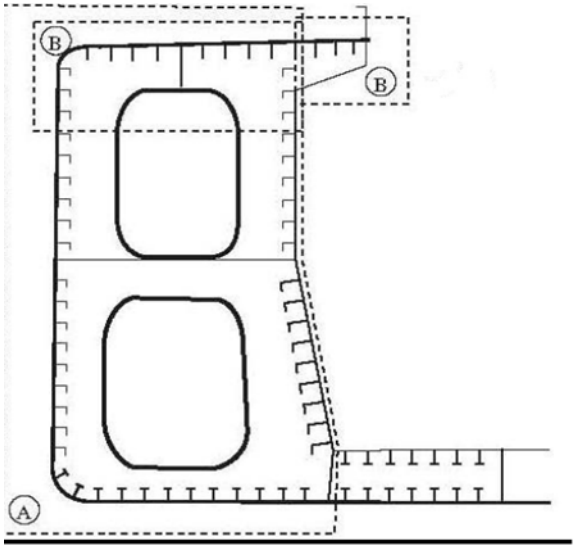

Representative transverse section. Areas **(A)** and **(B)**.

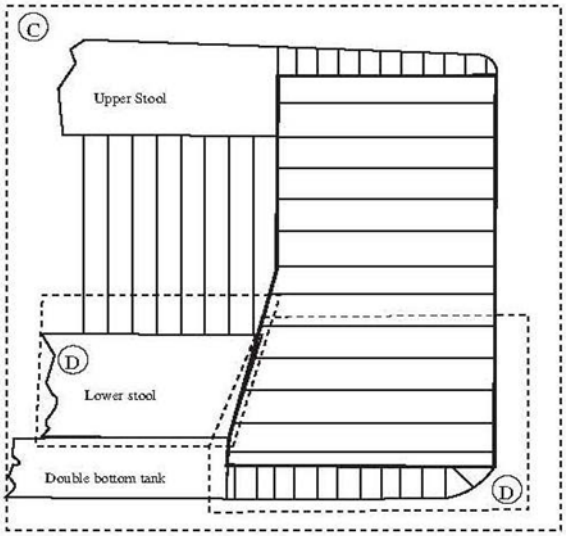

Representative transverse bulkhead. Areas **(C)** and **(D)**.

Fig. 4-I.5 Areas (A), (B), (C), (D) for close up survey of single skin chemical tankers of combined type

Table 4-I.7-1 Class renewal Survey of Single Skin Chemical Tankers Minimum Requirements for Close Up Surveys

Class Renewal Survey [No.] and ship's age [years]			
I. age ≤ 5	**II. 5 < age ≤ 10**	**III. 10 < age ≤ 15**	**IV. and subsequent, age > 15**
(1) ONE WEB FRAME RING in a ballast wing tank	(1) ALL WEB FRAMES RINGS in a ballast wing tank or ballast tank (see Note I)	(1) ALL WEB FRAMES RINGS in all ballast tanks	As renewal survey No. III
(2) ONE DECK TRANSVERSE in a cargo tank or on deck	(2) ONE DECK TRANSVERSE in each remaining ballast tank or on deck (2) ONE DECK TRANSVERSE in a cargo wing tank or on deck	(1) ALL WEB FRAMES RINGS in a cargo wing tank.	Additional transverse areas as deemed necessary by BKI
(4) ONE TRANSVERSE BULKHEAD lower part in a ballast tank	(2) ONE DECK TRANS-VERSE in two cargo centre tanks or on deck	(1) ONE WEB FRAME RING in each remaining cargo tank	
(4) ONE TRANSVERSE BULKHEAD lower part in a cargo wing tank	(3) BOTH TRANSVERSE BULKHEADS in a ballast wing tank	(3) ALL TRANSVERSE BULKHEADS in all cargo tanks	
(4) ONE TRANSVERSE BULKHEAD Lower part in a cargo centre tank (see Note II)	(4) ONE TRANSVERSE BULKHEAD lower part in each remaining ballast tank (4) ONE TRANSVERSE BULKHEAD lower part in two cargo centre tanks (see Note II) (4) ONE TRANSVERSE BULKHEAD lower part in a cargo wing tank	(3) ALL TRANSVERSE BULKHEADS in all ballast tanks	

***Note I**: Ballast double hull tank means double bottom tank plus double side tank plus double deck tank, as applicable, even if these tanks are separate.*

***Note II**: Where no centre cargo tanks are fitted (as in the case of centre longitudinal bulkhead), transverse bulkheads in wing tanks are to be surveyed.*

(1)-(4): are areas to be subjected to close-up surveys and thickness measurements (see Fig. 4-I.4 and Fig. 4-I.5).

(1) Complete transverse web frame ring including adjacent structural members.

(2) Deck transverse including adjacent deck structural members.

(3) Transverse bulkhead complete including girder system and adjacent structural members.

(4) Transverse bulkhead lower part including girder system and adjacent structural members

Table 4-I.7-2 Class renewal Survey of Double Skin Chemical Tankers Minimum Requirements for Close Up Surveys

Class Renewal Survey [No.] and ship's age [years]			
I. age ≤ 5	**II. 5 < age ≤ 10**	**III. 10 < age ≤ 15**	**IV. and subsequent, age > 15**
(1) ONE WEB FRAME RING in a ballast double hull tank (see Note I)	(1) ALL WEB FRAME RINGS in a ballast wing tank or ballast double hull tank (see Note I)	(1) ALL WEB FRAME RINGS in all ballast tanks	As renewal survey No.III
(2) ONE DECK TRANSVERSE in a cargo tank or on deck	(6) THE KNUCKLE AREA AND THE UPPER PART (3 metres approx.) of one web frame in each remaining ballast tank	(7) ALL WEB FRAME RINGS in a cargo wing tank	Additional transverse areas as deemed necessary by BKI
(4) ONE TRANSVERSE BULKHEAD in a ballast tank (see Note I)	(2) ONE DECK TRANSVERSE in two cargo tanks	(7) ONE WEB FRAME RING in each remaining cargo tank	
(5) ONE TRANSVERSE BULKHEAD in a cargo wing tank		(3) ALL TRANSVERSE BULKHEADS in all cargo tanks	
(5) ONE TRANSVERSE BULKHEAD in a cargo centre tank (see Note II)	(4) ONE TRANSVERSE BULKHEAD in each ballast tank (see Note I)	(4) ALL TRANS-VERSE BULKHEADS in all ballast tanks	
	(5) ONE TRANSVERSE BULKHEAD in two cargo centre tanks (see Note II)		
	(5) ONE TRANSVERSE BULKHEAD in a cargo wing tank		

(1), **(2)**, **(3)**, **(4)**, **(5)**, **(6)** and **(7)** are areas to be subjected to close-up surveys and thickness measurements (see Fig. 4-I.6 – 4.I.8).

(1): Web frame in a ballast tank means vertical web in side tank, hopper web in hopper tank, floor in double bottom tank and deck transverse in double deck tank (where fitted), including adjacent structural members. In fore and aft peak tanks web frame means a complete transverse web frame ring including adjacent structural members.

(2): Deck transverse, including adjacent deck structural members (or external structure on deck in way of the tank, where applicable).

(3): Transverse bulkhead complete in cargo tanks, including girder system, adjacent structural members (such as longitudinal bulkheads) and internal structure of lower and upper stools, where fitted.

(4): Transverse bulkhead complete in ballast tanks, including girder system and adjacent structural members, such as longitudinal bulkheads, girders in double bottom tanks, inner bottom plating, hopper side, connecting brackets.

(5): Transverse bulkhead lower part in cargo tank, including girder system, adjacent structural members (such as longitudinal bulkheads) and internal structure of lower stool, where fitted.

(6): The knuckle area and the upper part (3 m approximately), including adjacent structural members. Knuckle area is the area of the web frame around the connections of the slope hopper plating to the inner hull bulkhead and the inner bottom plating, up to 2 m from the corners both on the bulkhead and the double bottom.

(7): Web frame in a cargo tank means deck transverse, longitudinal bulkhead vertical girder and cross ties, where fitted, including adjacent structural members.

Note I: *Ballast double hull tank means double bottom tank plus double side tank plus double deck tank, as applicable, even if these tanks are separate.*

Note II: *Where no centre cargo tanks are fitted (as in the case of centre longitudinal bulkhead), transverse bulkheads in wing tanks are to be surveyed.*

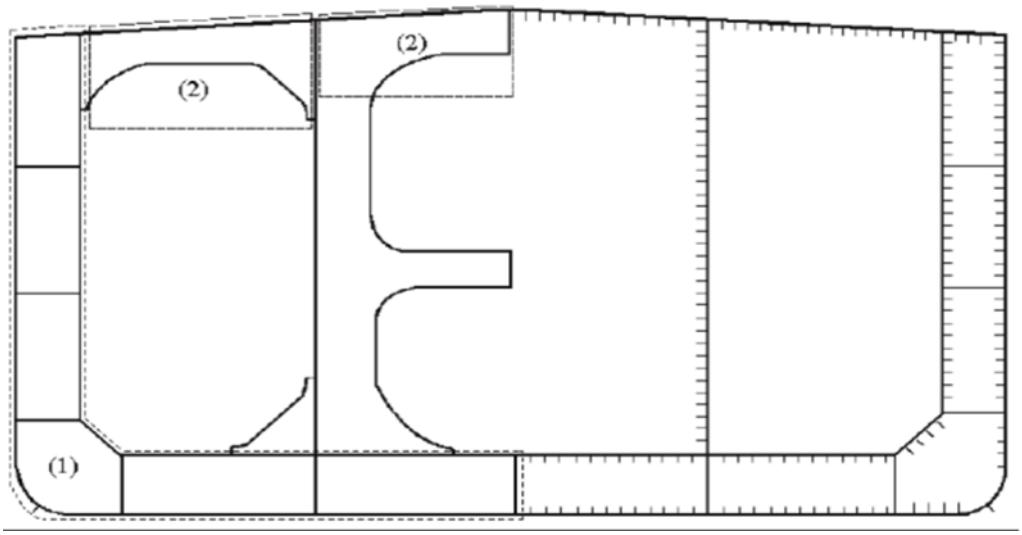

Fig. 4-I.6 Representative transverse section of double skin chemical tanker. Areas 1 and 2

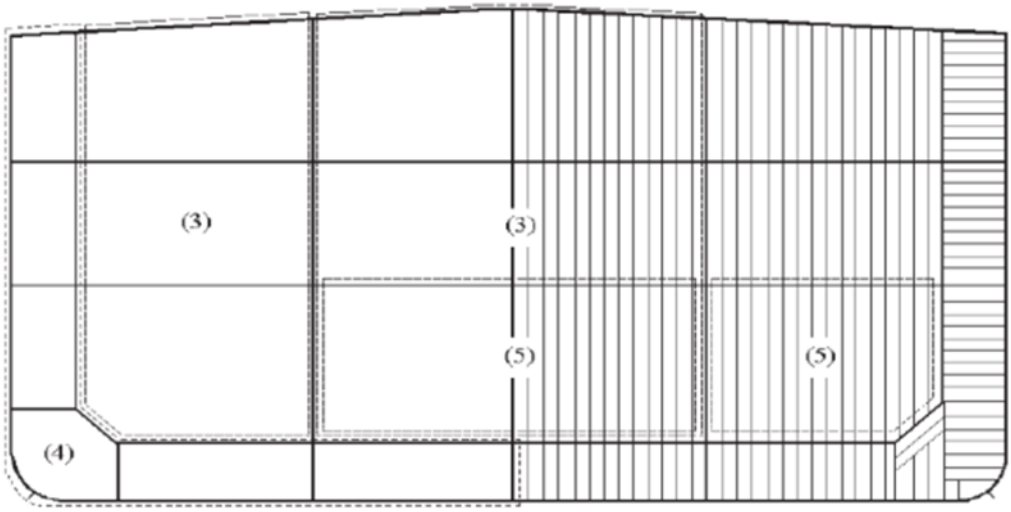

Fig. 4-I.7 Representative transverse section of double skin chemical tanker. Areas 3, 4 and 5

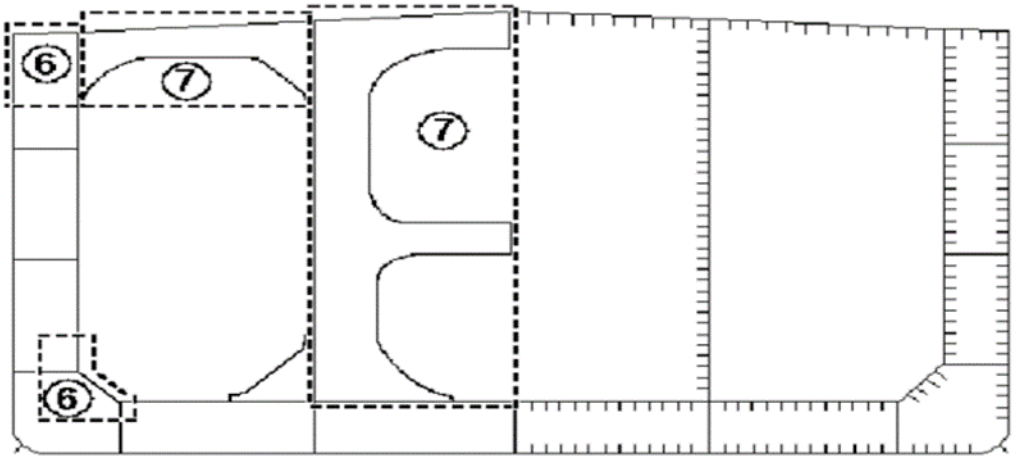

Fig. 4-I.8 Representative transverse section of double skin chemical tanker. Areas 6 and 7

Table 4-I.8 Class Renewal Surveys of Chemical Tankers Minimum Requirements for Thickness Measurements

Class Renewal Survey [No.] and ship's age [years]			
I. age ≤ 5	**II. 5 < age ≤ 10**	**III. 10 < age ≤ 15**	**IV. and subsequent, age > 15**
	Within the cargo area: – each deck plate – one transverse section[1]	Within the cargo area: – each deck plate – two transverse sections[1]	Within the cargo area: – each deck plate – three transverse sections[1] – each bottom plate
	Measurements of structural members subject to Close-Up Survey according to Table 4-I.7-1 and Table 4-I.7-2 for general assessment and recording of corrosion pattern		
Suspect Areas			
	Selected wind and water strakes, outside the cargo area		All wind and water strakes full length
		All wind and water strakes within the cargo area	
[1] At least one section is to include a ballast tank within 0,5**L** amidships.			

Table 4-I.9 Class Renewal Surveys of Chemical Tankers Minimum Requirements for Tank Testing

Class Renewal Survey [No.] and ship's age [years]			
I. age ≤ 5	**II. 5 < age ≤ 10**	**III. 10 < age ≤ 15**	**IV. and subsequent, age > 15**
All ballast tank boundaries			
Cargo tank boundaries facing ballast tanks, void spaces, pipe tunnels, pump rooms or cofferdams	All cargo tank bulkheads		

E. Bulk Carriers

1. General Requirements

1.1 Application

1.1.1 The following requirements apply to all self- propelled Single skin Bulk carriers of 500 gross tonnage and above with qualifier notation **ESP**, other than Double skin Bulk Carriers.

1.1.2 The requirements apply to surveys of hull structure and piping systems in way of cargo holds, cofferdams, pipe tunnels, void spaces and fuel oil tanks within the cargo area, and to all ballast tanks.

1.1.3 Unless otherwise stipulated in the following, the requirements of Section 3 apply.

1.1.4 For bulk carriers also designed for the carriage of crude oil, additionally, requirements in B. are to be observed.

1.1.5 Additional requirements for survey, assessment and repair of hull structures, see Guidance for Marine Industry (Pt.1, Vol.AC) Sec.4 R-76

1.2 Extent of surveys

1.2.1 The requirements contain the minimum extent of examination, thickness measurement and tank testing. The surveys are to be extended where substantial corrosion and/or structural defects are found, and will include an additional Close-Up Survey when necessary.

1.2.2 Bulk carriers that are required to comply with Rules for Hull (Pt.1, Vol.II) Sec.23, J (see 1.3.1) are subject to the additional thickness measurement guidance contained in Annex B.6 with respect to the vertically corrugated transverse watertight bulkhead between cargo holds Nos. 1 and 2 for purposes of determining compliance with Rules for Hull (Pt.1, Vol.II) Sec.23, J prior to the relevant compliance deadline

stipulated as follows and at subsequent Intermediate surveys (for ships over 10 years of age) and Class Renewal Surveys for purposes of verifying continuing compliance with Rules for Hull (Pt.1, Vol.II) Sec.23, J.

1) for bulk carriers which were 20 years of age or more on 1 July 1998, by the due date of the first intermediate, or the due date of the first Class Renewal Survey to be held after 1 July 1998, whichever comes first;

2) for bulk carriers which were 15 years of age or more but less than 20 years of age on 1 July 1998, by the due date of the first Class Renewal Survey to be held after 1 July 1998, but not later than 1 July 2002;

3) for bulk carriers which were 10 years of age or more but less than 15 years of age on 1 July 1998, by the due date of the first intermediate, or the due date of the first Class Renewal Survey to be held after the date on which the ship reaches 15 years of age but not later than the date on which the ship reaches 17 years of age;

4) for bulk carriers which were 5 years of age or more but less than 10 years of age on 1 July 1998, by the due date, after 1 July 2003, of the first intermediate or the first Class Renewal Survey after the date on which the ship reaches 10 years of age, whichever occurs first;

5) for bulk carriers which were less than 5 years of age on 1 July 1998, by the date on which the ship reaches 10 years of age.

6) completion prior to 1 July 2003 of an intermediate or Class Renewal Survey with a due date after 1 July 2003 cannot be used to postpone compliance. However, completion prior to 1 July 2003 of an intermediate survey the window for which straddles 1 July 2003 can be accepted.

These requirements are to applied in conjunction with the damage stability requirements set forth in Rules for Hull (Pt.1, Vol.II) Sec.36, C.2.3.

1.2.3 Bulk carriers which are required to comply with Annex B.11 are subject to the additional thickness measurement guidance contained in Annex B.7 with respect to the side shell frames and brackets for the purposes of determining compliance with Annex B.11 prior to the relevant compliance deadline stipulated as follows and at subsequent intermediate and Class Renewal Surveys for purposes of verifying continuing compliance with Annex B.11.

A) for bulk carriers which will be 15 years of age or more on 1 January 2004 by the due date of the first Intermediate or Class Renewal Survey after that date;

B) for bulk carriers which will be 10 years of age or more on 1 January 2004 by the due date of the first Class Renewal Survey after that date;

C) for bulk carriers which will be less than 10 years of age on 1 January 2004 by the date on which the ship reaches 10 years of age.

D) completion prior to 1 January 2004 of an Intermediate or Class Renewal Survey with a due date after 1 January 2004 cannot be used to postpone compliance. However, completion prior to 1 January 2004 of an Intermediate survey the window for which straddles 1 January 2004 can be accepted.

OBO carriers subject to Annex B.11.1 are to be assessed for compliance with the requirements of Annex B.11 and steel renewal, reinforcement or coating, where required in accordance with this Annex, is to be carried out in accordance with the following schedule and at subsequent intermediate and Class Renewal Surveys.

A) for OBO carriers which will be 15 years of age or more on 1 July 2005 by the due date of the first Intermediate or Class Renewal Survey after that date;

B) for OBO carriers which will be 10 years of age or more on 1 July 2005 by the due date of the first Class Renewal Survey after that date;

C) for OBO carriers which will be less than 10 years of age on 1 July 2005 by the date on which the ship reaches 10 years of age.

D) completion prior to 1 July 2005 of an Intermediate or Class Renewal Survey with a due date after 1 July 2005 cannot be used to postpone compliance. However, completion prior to 1 July 2005 of an Intermediate survey the window for which straddles 1 July 2005 can be accepted.

1.2.4 For Bulk carriers with hybrid cargo hold arrangements, e.g. with some cargo holds of single side skin and others of double side skin, the requirements of F. are to apply to cargo holds of double side skin and associated wing spaces only.

1.3 Additional Safety Measures

1.3.1 Requirement subject to Rules for Hull (Pt.1, Vol.II) Sec.23, J and K.

The requirement of Rules for Hull (Pt.1, Vol.II) Sec.23, J(Evaluation of Scantlings of the Transverse Watertight Corrugated Bulkhead between Cargo Holds Nos. 1 and 2, with Cargo Hold No. 1 Flooded) and Rules for Hull (Pt.1, Vol.II) Sec.23, K (Evaluation of Allowable Hold Loading of Cargo Hold No. 1 with Cargo Hold No. 1 Flooded) apply to all Bulk carriers of 150 m in length and above, in the foremost hold, intending to carry solid bulk cargoes having a density of 1,78 t/m^3, or above, with single deck, topside tanks and hopper tanks, fitted with vertically corrugated transverse watertight bulkheads between cargo holds No. 1 and 2 where:

A) the foremost hold is bounded by the side shell only for ships which were contracted for construction prior to 1 July 1998, and have not been constructed in compliance with Rules for Hull (Pt.1, Vol.II) Sec.23, E,

B) the foremost hold is double side skin construction of less than 760 mm breadth measured perpendicular to the side shell in ships, the keels of which were laid, or which were at a similar stage of construction, before 1 July 1999 and have not been constructed in compliance with Rules for Hull (Pt.1, Vol.II) Sec.23, E

In connection with this strength calculation additional thickness measurements have to be taken of the aforementioned structures. Renewal and strengthening required are to be approved by BKI. Thickness measurements and strength calculations are to be performed at all subsequent Intermediate Surveys (for ships over 10 years) and Class Renewal Surveys.

1.3.2 Damage stability requirements

Bulk carriers of 150 m in length and above of single side skin construction have to comply with the damage stability requirements as specified in Rules for Hull (Pt.1, Vol.II) Sec.36, C.2 (see also SOLAS Reg. XII/4).

For possible exemptions please refer to SOLAS Reg. XII/9.

1.3.3 Cargo hold hatch cover securing arrangements

Bulk carriers which were not built in accordance with the particular requirements [4)] for evaluation of the scantlings of hatch covers and hatch coamings of cargo holds have to comply with the additional requirements [5)] for cargo hatch cover securing arrangements.

[4)] For requirements, see Rules for Hull (Pt.1, Vol.II) Sec.17, A-C

[5)] For requirements, see Rules for Hull (Pt.1, Vol.II) Sec.17, F

1.3.4 Side shell frames and brackets

Single side bulk carriers which were not built in accordance with the particular requirements for side structures, as well as Oil/Bulk/Ore (OBO) carriers, have to be assessed for compliance with the respective renewal criteria for side shell frames and brackets [6].

In connection with this, additional thickness measurements and strength calculations have to be performed for the aforementioned structures. Renewal and strengthening required are to be approved by BKI.

Thickness measurements and strength calculations have to be performed at all subsequent intermediate and Class Renewal Surveys.

1.3.5 Water ingress detection and dewatering system

All bulk carriers have to comply with the requirements [7] concerning water level detectors in hold, ballast and dry spaces, as well as with the availability requirements 14 [8] of pumping systems for dewatering and pumping ballast tanks forward of the collision bulkhead and bilges of dry spaces forward of the foremost cargo hold. Function tests are to be carried out at a random basis at all subsequent Annual Surveys and in full scope at Class Renewal Surveys.

1.3.6 Strength and securing of small hatches on exposed Fore Deck

All bulk carriers have to comply with the requirements [9] concerning the strength and securing devices for small hatches fitted on the exposed fore deck.

Those hatches are designed for access to spaces below deck and are capable to be closed weather-tight or watertight, as applicable. There opening is normally 2,5 m^2 or less.

1.3.7 Strength of Fore Deck fittings and Equipment

All bulk carriers have to comply with the requirements [10] concerning the strength of air pipes, ventilator pipes and their closing devices and windlasses.

1.3.8 Restriction from sailing with any hold empty

Bulk carriers of 150 m in length L and upwards of single side skin construction carrying dry cargoes having a density of 1,78 t/m^3 and above, have to comply with the requirements [11] concerning the loading of cargo holds in full load condition (at least 90% of ship's deadweight). Requirements are applicable after the vessel reaches 10 years of age and only if the vessel meets not the requirements for withstanding flooding of any one cargo hold.

1.4 Rescue and emergency response equipment

If breathing apparatus and/or other equipment is used as 'Rescue and emergency response equipment' then it is recommended that the equipment should be suitable for the configuration of the space being surveyed.

[6] For requirements, see Annex B.11
[7] For requirements, see SOLAS XII/12 and Guidance for Code and Convention Interpretations (Pt.1, Vol.Y) Sec.11.SC 180
[8] For requirements, see SOLAS XII/13 and Guidance for Code and Convention Interpretations (Pt.1, Vol.Y) Sec.11.SC 179
[9] For requirements, see Rules for Hull (Pt.1, Vol.II), Sec.17, D
[10] For requirements, see Rules for Hull (Pt.1, Vol.II), Sec.21, F.5
[11] For requirements, see SOLAS XII/14

2. Annual surveys

2.1 General

2.1.1 The schedule of Annual Surveys is to be in accordance with the requirements of Section 3, B.1.1.1.

2.1.2 The survey is to consist of an examination for the purpose of ensuring, as far as practicable, that the hull, weather decks, hatch covers, coamings and piping are maintained in a satisfactory condition and should take into account the service history, condition and extent of the corrosion prevention system of ballast tanks and areas identified in the survey report file.

2.2 Examination of the hull

— Examination of the hull plating and its closing appliances as far as can be seen.

— Examination of watertight penetrations as far as practicable.

2.3 Examination of weather deck, hatch covers and coamings

2.3.1 Confirmation is to be obtained that no unapproved changes have been made to the hatch covers, hatch coamings and their securing and sealing devices since the last survey.

2.3.2 A thorough survey of cargo hatch covers and coamings is only possible by examination in the open as well as closed positions and should include verification of proper opening and closing operation. As a result, at least the hatch cover sets within the forward 25 % of the ships length and at least one additional set, such that all the sets on the ship are assessed at least once in every five-year period, should be surveyed open, closed and in operation to the full extent in each direction at each Annual Survey, including:

— stowage and securing in open condition;

— proper fit and efficiency of sealing in closed condition; and

— operational testing of hydraulic and power components, wires, chains and link drives

The closing of covers should include the fastening of all peripheral, and cross joint cleats or other securing devices. Particular attention should be paid to the condition of hatch covers in the forward 25 % of the ships length, where the sea loads are normally greatest.

2.3.3 If there are indications of difficulty in operation and securing hatch covers, additional sets above those required in 2.3.2, at the discretion of the surveyor, should be tested in operation.

2.3.4 Where the cargo hatch securing system does not function properly, repairs should be carried out under the supervision of the BKI's surveyor. Where hatch covers or coamings undergo substantial repairs, the strength of securing devices should be upgraded to comply with Annex 11 of IMO Resolution MSC 261 (84) as amended or Rules for Hull (Pt.1, Vol.II) Sec.17.B.5.

2.3.5 For each cargo hatch cover set, at each Annual Survey, the following items should be surveyed:

— cover panels, including side plates, and stiffener attachments that may be accessible in the open position by Close-Up Survey (for corrosion, cracks, deformation);

— sealing arrangements of perimeter and cross joints (gaskets for condition and permanent deformation, flexible seals on combination carriers, gasket lips, compression bars, drainage channels and non-return valves);

— clamping devices, retaining bars, cleating (for wastage, adjustment, and condition of rubber components);

— closed cover locating devices (for distortion and attachment);

— chain or rope pulleys;

— guides;

— guide rails and track wheels;

— stoppers;

— wires, chains, tensioners and gypsies;

— hydraulic system, electrical safety devices and interlocks; and

— end and interpanel hinges, pins and stools where fitted.

2.3.6 At each hatchway, at each Annual Survey, the coamings, with plating, stiffeners and brackets should be checked for corrosion, cracks and deformation, especially of the coaming tops, including close-up survey.

2.3.7 Where considered necessary, the effectiveness of sealing arrangements may be proved by hose or chalk testing supplemented by dimensional measurements of seal compressing components.

2.3.8 Where portable covers, wooden or steel pontoons are fitted, the satisfactory condition of the following should be confirmed:

— wooden covers and portable beams, carriers or sockets for the portable beam, and their securing devices;

— steel pontoons, including close-up survey of hatch cover plating;

— tarpaulins;

— cleats, battens, and wedges;

— hatch securing bars and their securing devices;

— loading pads/bars and the side plate edge;

— guides plates and chocks;

— compression bars; drainage channels and drain pipes (if any).

2.3.9 Examination of flame screens on vents to all bunker tanks.

2.3.10 Examination of bunker and vent piping systems, including ventilators.

2.4 Examination of Cargo holds

2.4.1 Bulk Carriers 10-15 years of age, the following is to apply:

1) Overall Survey of all cargo holds.

2) Close-up survey of sufficient extent, minimum 25% of frames, to establish the condition of the lower region of the shell frames including approx. lower one third length of side frame at side shell and side frame end attachment and the adjacent shell plating in the forward cargo hold. Where this level of survey reveals the need for remedial measures, the survey is to be extended to include a Close-up Survey of all of the shell frames and adjacent shell plating of that cargo hold as well as a Close-up survey of sufficient extent of all remaining cargo holds.

3) When considered necessary by the surveyor, or where extensive corrosion exists, thickness measurement is to be carried out. If the results of these thickness measurements indicate that Substantial Corrosion is found, the extent of thickness measurements is to be increased in accordance with Annex B.5. These thickness measurements are to be carried out before the annual survey is credited as completed. Suspect Areas identified at previous surveys are to be examined. Areas of substantial corrosion identified at previous surveys are to have thickness measurements taken.

   For vessels built under the IACS Common Structural Rules, the annual thickness gauging may be omitted where a protective coating has been applied in accordance with the coating manufacturer's requirements and is maintained in good condition.

4) Where the protective coating in cargo holds is found to be in GOOD condition, the extent of close-up surveys and thickness measurements may be specially considered.

5) All piping and penetrations in cargo holds, including overboard piping, are to be examined.

2.4.2 Bulk Carriers over 15 years of age, the following is to apply:

1) Overall Survey of all cargo holds.

2) Close-up survey of sufficient extent, minimum 25% of frames, to establish the condition of the lower region of the shell frames including approx. lower one third length of side frame at side shell and side frame end attachment and the adjacent shell plating in the forward cargo hold and one other selected cargo hold. Where this level of survey reveals the need for remedial measures, the survey is to be extended to include a Close-up Survey of all of the shell frames and adjacent shell plating of that cargo hold as well as a Close-up Survey of sufficient extent of all remaining cargo holds.

3) When considered necessary by the surveyor, or where extensive corrosion exists, thickness measurement is to be carried out. If the results of these thickness measurements indicate that Substantial Corrosion is found, the extent of thickness measurements is to be increased in accordance with Annex B.5. These extended thickness measurements are to be carried out before the annual survey is credited as completed. Suspect Areas identified at previous surveys are to be examined. Areas of substantial corrosion identified at previous surveys are to have thickness measurements taken.

   For vessels built under the IACS Common Structural Rules, the annual thickness gauging may be omitted where a protective coating has been applied in accordance with the coating manufacturer's requirements and is maintained in good condition.

4) Where a hard-protective coating is fitted in cargo holds and is found in GOOD condition, the extent of close-up surveys and thickness measurements may be specially considered.

5) All piping and penetrations in cargo holds, including overboard piping, are to be examined.

2.5 Examination of Ballast tanks

2.5.1 Examination of Ballast Tanks when required as a consequence of the results of the Class Renewal Survey and Intermediate Survey is to be carried out. When considered necessary by the surveyor, or where extensive corrosion exists, thickness measurements are to be carried out. If the results of these thickness measurements indicate that Substantial Corrosion is found, the extent of thickness measurements is to be increased in accordance with Annex B.5. These extended thickness measurements are to be carried out before the survey is credited as completed. Suspect Areas identified at previous surveys are to be examined. Areas of substantial corrosion identified at previous survey are to have thickness measurements taken.

For vessels built under the IACS Common Structural Rules, the annual thickness gauging may be omitted where a protective coating has been applied in accordance with the coating manufacturer's requirements and is maintained in good condition.

2.6 Additional Annual survey requirements for the foremost cargo hold acc. to SOLAS Reg. XII/9.1

2.6.1 Ships subject to SOLAS XII/9.1 are those meeting all the following conditions:

— Bulk Carriers of 150 m in length and upwards of single side skin construction,

— carrying solid bulk cargoes having a density of 1780 kg/m^3 and above,

— contracted for construction (see Note 1) before 1 July 1999, and

— constructed with an insufficient number of transverse watertight bulkheads to enable them to withstand flooding of the foremost cargo hold in all loading conditions and remain afloat in a satisfactory condition of equilibrium as specified in SOLAS XII/4.3.

Note 1:
"The "contracted for construction" date means the date on which the contract to build the vessel is signed between the prospective owner and the shipbuilder. For further details regarding the date of "contract for construction", refer to IACS Procedural Requirement (PR) No.29."

2.6.2 In accordance with SOLAS XII/9.1, for the foremost cargo hold of such ships, the additional survey requirements listed in Annex B.8 shall apply.

2.7 Additional Annual survey requirements after determining compliance with SOLAS XII/12 and XII/13

2.7.1 For ships complying with the requirements of SOLAS XII/12 for hold, ballast and dry space water level detectors, the annual survey is to include an examination and a test, at random, of the water ingress detection systems and of their alarms.

2.7.2 For ships complying with the requirements of SOLAS XII/13 for the availability of pumping systems, the annual survey is to include an examination and a test, of the means for draining and pumping ballast tanks forward of the collision bulkhead and bilges of dry spaces any part of which extends forward of the foremost cargo hold, and of their controls.

3. Intermediate Surveys

3.1 General

3.1.1 The schedule of Intermediate Surveys is to be in accordance with the requirements of Section 3, B.1.2.1.

3.2 Bulk carriers 5 - 10 years of age. The following is to apply:

3.2.1 Ballast Tanks

1) For tanks used for water ballast, an overall survey of representative spaces selected by the Surveyor is to be carried out. The selection is to include fore and aft peak tanks and a number of other tanks, taking into account the total number and type of ballast tanks. If such overall survey reveals no visible structural defects, the examination may be limited to verification that the corrosion prevention system remains efficient.

2) Where a hard coating is found to be in less than GOOD condition, corrosion or other defects are found in water Ballast tanks or where a hard-Protective Coating was not applied from the time of construction, the examination is to be extended to other Ballast tanks of the same type.

3) In ballast tanks other than double bottom tanks, where a hard-Protective Coating is found to be in less than GOOD condition, and it is not renewed, or where soft or semi-hard coating has been applied, or where a hard-protective coating was not applied from the time of construction, the tanks in question are to be examined and thickness measurements carried out as considered necessary at

annual intervals. When such breakdown of hard protective coating is found in ballast double bottom tanks, or where a soft or semi-hard coating has been applied, or where a hard-protective coating has not been applied, the tanks in question may be examined at annual intervals. When considered necessary by the Surveyor, or where extensive corrosion exists, thickness measurements are to be carried out.

4) In addition to the requirements above, suspect areas identified at previous surveys are to be overall and close-up surveyed.

3.2.2 Cargo Holds

1) An overall survey of all cargo holds, including close-up survey of sufficient extent minimum 25 % of frames, is to be carried out to establish the condition of:

   A) Shell frames including their upper and lower end attachments, adjacent shell plating, and transverse bulkheads in the forward cargo hold and one other selected cargo hold;

   B) Areas found suspect at previous surveys.

2) Where considered necessary by the surveyor as a result of the overall and close-up survey as described in 3.2.2.1), the survey is to be extended to include a close-up survey of all of the shell frames and adjacent shell plating of that cargo hold as well as a close-up survey of sufficient extent of all remaining cargo holds.

3.2.3 Extent of Thickness Measurements

1) Thickness measurements are to be carried out to an extent sufficient to determine both general and local corrosion levels at areas subject to close-up survey as described in 3.2.2.1). The minimum requirement for thickness measurements at the Intermediate Survey are areas found to be Suspect Areas at previous surveys.

2) The extent of thickness measurement may be specially considered provided the Surveyor is satisfied by the close-up survey, that there is no structural diminution and the hard-protective coatings are found to be in a GOOD condition.

3) Where Substantial Corrosion is found, the extent of thickness measurements is to increase in accordance with the requirements of Annex B.5. These extended thickness measurements are to be carried out before the survey is credited as completed. Suspect Areas identified at previous surveys are to be examined. Areas of substantial corrosion identified at previous surveys are to have thickness measurements taken.

   For vessels built under IACS Common Structural Rules, the identified substantial corrosion areas may be:

   A) protected by coating applied in accordance with the coating manufacturer's requirements and examined at annual intervals to confirm the coating in way is still in good condition, or alternatively

   B) required to be measured at annual intervals.

4) Where the hard-protective coating in cargo holds, is found to be in GOOD condition, the extent of close-up surveys and thickness measurements may be specially considered.

Explanatory note:
For existing bulk carriers, where owners may elect to coat or recoat cargo holds as noted above, consideration may be given to the extent of the close-up and thickness measurement surveys. Prior to the coating of cargo holds of existing ships, scantlings should be ascertained in the presence of a surveyor.

3.3 Bulk Carriers 10 - 15 years of age. The following is to apply:

3.3.1 The requirements of the Intermediate Survey are to be to the same extent to the previous Class Renewal Survey as required in 4. and A.8. However, internal examination of fuel tanks and pressure testing of all tanks are not required unless deemed necessary by the attending surveyor.

3.3.2 In application of 3.3.1 above, the Intermediate survey may be commenced at the second annual survey and be progressed during the succeeding year with a view to completion at the third annual survey in lieu of the application of Section 3, B.1.3.1.7).

3.3.3 In application of 3.3.1 above, an underwater survey may be considered in lieu of the requirements of 4.2.

3.4 Bulk Carriers over 15 years of age. The following is to apply:

3.4.1 The requirements of the Intermediate Survey are to be to the same extent to the previous Class Renewal Survey as required in 4. and A.8. However, internal examination of fuel tanks and pressure testing of all tanks are not required unless deemed necessary by the attending surveyor.

3.4.2 In application of 3.4.1 above, the Intermediate survey may be commenced at the second annual survey and be progressed during the succeeding year with a view to completion at the third annual survey in lieu of the application of Section 3, B.1.3.1.7).

3.4.3 In application of 3.4.1 above, a survey in dry dock is to be part of the intermediate survey. The overall and close-up surveys and thickness measurements, as applicable, of the lower portions of the cargo holds and water ballast tanks are to be carried out in accordance with the applicable requirements for intermediate surveys, if not already performed.

Note:
Lower portions of the cargo hold and ballast tanks are considered to be the parts below light ballast water line.

4. Class Renewal Surveys

4.1 General

4.1.1 The schedule of Class Renewal Surveys is to be in accordance with the requirements of Section 3, B.1.3.1.

4.1.2 The Class Renewal Survey is to include, in addition to the requirements of the Annual Survey, examination, tests and checks of sufficient extent to ensure that the hull and related piping, as required in 4.1.4, is in a satisfactory condition and is fit for its intended purpose for the new period of class of 5 years to be assigned, subject to proper maintenance and operation and to periodical surveys being carried out at the due dates.

4.1.3 All cargo tanks, Ballast Tanks, including double bottom tanks, pump rooms, pipe tunnels, cofferdams and void spaces bounding cargo tanks, decks and outer hull are to be examined, and this examination is to be supplemented by thickness measurement and testing required in 4.5 and 4.6, to ensure that the structural integrity remains effective. The aim of the examination is to discover Substantial Corrosion, significant deformation, fractures, damages or other structural deterioration, that may be present.

4.1.4 All piping systems within the above Spaces are to be examined and operationally tested to working pressure to attending Surveyor's satisfaction to ensure that tightness and condition remain satisfactory.

4.1.5 The survey extent of ballast tanks converted to void spaces is to be specially considered in relation to the requirements for ballast tanks.

4.2 Dry Dock Survey

4.2.1 A survey in dry dock is to be a part of the Class Renewal Survey. The overall and close-up surveys and thickness measurements, as applicable, of the lower portions of the cargo holds and ballast tanks are to be carried out in accordance with the applicable requirements for Class Renewal Surveys, if not already performed.

Note:
Lower portions of the cargo hold and ballast tanks are considered to be the parts below light ballast water line.

4.3 Space Protection

4.3.1 Where provided, the condition of the corrosion prevention system of Ballast Tanks is to be examined. For ballast tanks, excluding double bottom tanks, where a hard-protective coating is found to be in less than GOOD condition and it is not renewed, or where soft or semi-hard coating has been applied, or where a hard-protective coating has not been applied from the time of construction, the tanks in question are to be examined at annual intervals. Thickness measurements are to be carried out as deemed necessary by the surveyor.

When such breakdown of hard protective coating is found in water ballast double bottom tanks and it is not renewed, where a soft or semi-hard coating has been applied, or where a hard-protective coating has not been applied from the time of construction, the tanks in question may be examined at annual intervals. When considered necessary by the surveyor, or where extensive corrosion exists, thickness measurements are to be carried out.

4.3.2 Where a hard-protective coating is provided in cargo holds, and is found in GOOD condition, the extent of close-up surveys and thickness measurements may be specially considered.

4.4 Hatch Covers and Coamings

The hatch covers and coamings are to be surveyed as follows:

4.4.1 A thorough inspection of the items listed in 2.3 is to be carried out, in addition to all hatch covers and coamings.

4.4.2 Checking of the satisfactory operation of all mechanically operated hatch covers is to be made, including:

— stowage and securing in open condition;

— proper fit and efficiency of sealing in closed condition;

— operational testing of hydraulic and power components, wires, chains, and link drives.

4.4.3 Checking the effectiveness of sealing arrangements of all hatch covers by hose testing or equivalent.

4.4.4 Close-up survey and thickness measurement (see Note 2) of the hatch cover and coaming plating and stiffeners is to be carried out as given in Table 4-I.11 and Table 4-I.12.

Table 4-I.10 Class Renewal Survey of Fuel Oil Tanks in The Cargo Length Area

Class Renewal Survey No. I Age $\leq$ 5	**Class Renewal Survey No. II 5 < Age $\leq$ 10**	**Class Renewal Survey No. III 10 < Age $\leq$ 15**	**Class Renewal Survey No. IV and Subsequent 15 < Age**
None	One	Two	Half, minimum two

Notes:

1. *These requirements apply to tanks of integral (structural) type.*
2. *If a selection of tanks is accepted to be examined, then different tanks are to be examined at each Class Renewal Survey, on a rotational basis.*
3. *Peak tanks (all uses) are subject to internal examination at each Class Renewal Survey.*
4. *At Class Renewal Survey No.III and subsequent Class Renewal Surveys, one deep tank for fuel oil in the cargo area is to be included, if fitted.*

Table 4-I.11 Minimum Requirements for Close-Up Surveys at Class Renewal Surveys of Single Skin Bulk Carriers

Class Renewal Survey No. I Age $\leq$ 5	Class Renewal Survey No. II 5 < Age $\leq$ 10	Class Renewal Survey No. III 10 < Age $\leq$ 15	Class Renewal Survey No. IV and Subsequent 15 < Age
(A) 25% of shell frames in the forward cargo hold at representative positions. **(A)** Selected frames in remaining cargo holds. **(B)** One transverse web with associated plating and longitudinal in two representative water ballast tanks of each type (i.e. topside, or hopper side tank). **(C)** Two selected cargo hold transverse bulkheads, including internal structure of upper and lower stools, where fitted. **(D)** All cargo hold hatch covers and coamings (plating and stiffeners).	**(A)** All shell frames in the forward cargo hold and 25% of shell frames in each of the remaining cargo holds, including upper and lower end attachments and adjacent shell plating. For Bulk Carriers 100,000 DWT and above, all shell frames in the forward cargo hold and 50% of shell frames in each of the remaining cargo holds, including upper and lower end attachments and adjacent shell plating. **(B)** One transverse web with associated plating and longitudinal in each water ballast tank. **(B)** Forward and aft transverse bulkhead in one ballast tank, including stiffening system. **(C)** All cargo holds transverse bulkheads, including internal structure of upper and lower stools, where fitted. **(D)** All cargo hold hatch covers and coamings (plating and stiffeners). **(E)** All deck plating and under deck structure inside line of hatch openings between all cargo hold hatches.	**(A)** All shell frames in the forward and one other selected cargo hold and 50% of frames in each of the remaining cargo holds, including upper and lower end attachments and adjacent shell plating. **(B)** All transverse webs with associated plating and longitudinal in each water ballast tank. **(B)** All transverse bulkheads in ballast tanks, including stiffening system Areas **(C)**, **(D)** and **(E)** as for Class Renewal Survey No.II	**(A)** All shell frames in all cargo holds including upper and lower end attachments and adjacent shell plating. Areas **(B) - (E)** as for Class Renewal Survey No. III

(A) Cargo hold transverse frames
(B) Transverse web frame or watertight transverse bulkhead in water ballast tanks
(C) Cargo hold transverse bulkheads plating, stiffeners and girders
(D) Cargo hold hatch covers and coamings. Subject to cargo hold hatch covers of approved design which structurally have no access to the internals, close-up survey/thickness measurement shall be done of accessible parts of hatch covers structures.
(E) Deck plating and under deck structure inside line of hatch openings between cargo hold hatches.
See sketch in Annex B.7 for zones of side shell frames for ships subject to compliance with UR S31

Notes:
Close-up Survey of transverse bulkheads to be carried out at four levels:
Level (a) Immediately above the inner bottom and immediately above the line of gussets (if fitted) and shedders for ships without lower stool
Level (b) Immediately above and below the lower stool shelf plate (for those ships fitted with lower stools), and immediately above the line of the shedder plates.
Level (c) About mid-height of the bulkhead.
Level (d) Immediately below the upper deck plating and immediately adjacent to the upper wing tank, and immediately below the upper stool shelf plate for those ships fitted with upper stools, or immediately below the topside tanks.

4.5 Extent of Overall and Close-up Survey

4.5.1 An Overall Survey of all tanks and spaces is to be carried out at each Class Renewal Survey. Fuel oil tanks in the cargo length area are to be surveyed in according to Table 4-I.10.

4.5.2 The minimum requirements for Close-up Surveys at Class Renewal Survey are given in Table 4-I.11.

4.5.3 The Surveyor may extend the Close-up Survey as deemed necessary taking into account the maintenance of the spaces under survey, the condition of the corrosion prevention system and where spaces have structural arrangements or details which have suffered defects in similar spaces or on similar ships according to available information.

4.5.4 For areas in spaces where hard protective coatings are found to be in a GOOD, the extent of Close-up Surveys according to Table 4-I.11 may be specially considered.

4.6 Extent of Thickness Measurement

4.6.1 The minimum requirements for thickness measurements at Class Renewal Survey are given in Table 4-I.12.

For additional thickness measurement guidelines, applicable to the vertically corrugated transverse watertight bulkhead between cargo hold No. 1 and 2 on ships subject to compliance with UR S19 and S23, reference is to be made to 1.2.2 and Annex B.6.

For additional thickness measurement guidelines, applicable to the side shell frames and brackets on ships subject to compliance with UR S31, reference is to be made to 1.2.3 and Annex B.7.

4.6.2 Provisions for extended measurements for areas with Substantial Corrosion are given in Annex B.5, and as may be additionally specified in the Survey Programme as required by A.8. These extended thickness measurements are to be carried out before the survey is credited as completed. Suspect Areas identified at previous surveys are to be examined. Areas of substantial corrosion identified at previous surveys are to have thickness measurements taken.

For vessels built under IACS Common Structural Rules, the identified substantial corrosion areas may be:

1) protected by coating applied in accordance with the coating manufacturer's requirements and examined at annual intervals to confirm the coating in way is still in good condition, or alternatively

2) required to be measured at annual intervals.

4.6.3 The Surveyor may further extend the thickness measurements as deemed necessary.

4.6.4 For areas in tanks where hard protective coating is found to be in a GOOD condition, the extent of thickness measurements according to Table 4-I.12 may be specially considered.

4.6.5 Transverse sections are to be chosen where the largest reductions are suspected to occur or are revealed from deck plating measurements, one of which is to be in the amidships area.

4.6.6 Representative thickness measurement to determine both general and local levels of corrosion in the shell frames and their end attachments in all cargo holds and water ballast tanks is to be carried out.

Thickness measurement is also to be carried out to determine the corrosion levels on the transverse bulkhead plating. The extent of thickness measurements may be specially considered provided the Surveyor is satisfied by the close-up survey, that there is no structural diminution, and the hard-protective coating where applied remains efficient.

Table 4-I.12 Minimum Requirements for Thickness Measurement at Class Renewal Surveys of Single Skin Bulk Carriers

Class Renewal Survey No. I Age ≤ 5	**Class Renewal Survey No. II 5 < Age ≤ 10**	**Class Renewal Survey No. III 10 < Age ≤ 15**	**Class Renewal Survey No. IV and Subsequent 15 < Age**
Suspect areas	Suspect areas	Suspect areas	Suspect areas
	Within the cargo length: Two transverse sections of deck plating outside line of cargo hatch openings	Within the cargo length: - each deck plate outside line of cargo hatch openings - two transverse sections, one in the amidship area, outside line of cargo hatch openings - all wind and water strakes	Within the cargo length: - each deck plate outside line of cargo hatch openings - three transverse sections, one in the amidship area, outside line of cargo hatch openings - each bottom plate
	Wind and water strakes in way of the two transverse sections considered above Selected wind and water strakes outside the cargo length area	Selected wind and water strakes outside the cargo length area	All wind and water strakes, full length
	Measurements, for general assessment and recording of corrosion pattern, of those structural members subject to close-up survey according to Table 4-I.11	Measurements, for general assessment and recording of corrosion pattern, of those structural members subject to close-up survey according to Table 4-I.11	Measurements, for general assessment and recording of corrosion pattern, of those structural members subject to close-up survey according to Table 4-I.11
		See 1.2.2 and Annex B.6 for additional thickness measurement guidelines applicable to the vertically corrugated transverse water-tight bulkhead between cargo hold No.1 and 2 on ships subject to compliance with URs S19 and S23.	See 1.2.2 and Annex B.6 for additional thickness measurement guidelines applicable to the vertically corrugated transverse water-tight bulkhead between cargo hold No.1 and 2 on ships subject to compliance with URs S19 and S23.
	See 1.2.3 and Annex B.7 for Additional thickness measurement guidelines applicable to the side shell frames and brackets on ships subject to compliance with UR S31.	See 1.2.3 and Annex B.7 for additional thickness measurement guidelines applicable to the side shell frames and brackets on ships subject to compliance with UR S31.	See 1.2.3 and Annex B.7 for additional thickness measurement guidelines applicable to the side shell frames and brackets on ships subject to compliance with UR S31.

4.7 Extent of Tank testing

4.7.1 All boundaries of water ballast tanks, deep tanks and cargo holds used for water ballast within the cargo length area are to be pressure tested. For Fuel Oil Tanks, only representative tanks are to be pressure tested.

4.7.2 The Surveyor may extend the tank testing as deemed necessary

4.7.3 Boundaries of ballast tanks are to be tested with a head of liquid to the top of air pipes.

4.7.4 Boundaries of ballast holds are to be tested with a head of liquid to near to the top of hatches.

4.7.5 Boundaries of fuel oil tanks are to be tested with a head of liquid to the highest point that liquid will rise under service conditions. Tank testing of fuel oil tanks may be specially considered based on a satisfactory external examination of the tank boundaries, and a confirmation from the Master stating that the pressure testing has been carried out according to the requirements with satisfactory results.

4.7.6 The testing of double bottom tanks and other spaces not designed for the carriage of liquid may be omitted, provided a satisfactory internal examination together with an examination of the tank top is carried out.

4.8 Additional Class Renewal Survey requirements after determining compliance with SOLAS XII/12 and XII/13

4.8.1 For ships complying with the requirements of SOLAS XII/12 for hold, ballast and dry space water level detectors, the Class Renewal Survey is to include an examination and a test of the water ingress detection systems and of their alarms.

4.8.2 For ships complying with the requirements of SOLAS XII/13 for the availability of pumping systems, the Class Renewal Survey is to include an examination and a test of the means for draining and pumping ballast tanks forward of the collision bulkhead and bilges of dry spaces any part of which extends forward of the foremost cargo hold, and of their controls.

F. Double skin Bulk Carriers

1. General Requirements

1.1 Application

1.1.1 The following requirements apply to all self-propelled Double skin Bulk carriers of 500 gross tonnage and above with qualifier notation **ESP**.

1.1.2 The requirements apply to surveys of hull structure and piping systems in way of cargo holds, cofferdams, pipe tunnels, void spaces and fuel oil tanks within the cargo area, and to all ballast tanks.

1.1.3 Unless otherwise stipulated in the following, the requirements of Section 3 apply.

1.2 Extent of surveys

1.2.1 The requirements contain the minimum extent of examination, thickness measurement and tank testing. The surveys are to be extended where substantial corrosion and/or structural defects are found, and will include an additional Close-Up Survey when necessary.

1.2.2 For bulk carriers with hybrid cargo hold arrangements, e.g. with some cargo holds of single side skin and others of double side skin, the requirements of E. are to apply to cargo holds of single side skin.

2. Annual surveys

2.1 General

2.1.1 The schedule of Annual Surveys is to be in accordance with the requirements of Section 3, B.1.1.1.

2.1.2 The survey is to consist of an examination for the purpose of ensuring, as far as practicable, that the hull, weather decks, hatch covers, coamings and piping are maintained in a satisfactory condition and should take into account the service history, condition and extent of the corrosion prevention system of ballast tanks and areas identified in the survey report file.

2.2 Examination of the hull

— Examination of the hull plating and its closing appliances as far as can be seen.

— Examination of watertight penetrations as far as practicable.

2.3 Examination of weather deck, hatch covers and coamings

2.3.1 Confirmation is to be obtained that no unapproved changes have been made to the hatch covers, hatch coamings and their securing and sealing devices since the last survey.

2.3.2 A thorough survey of cargo hatch covers, and coamings is only possible by examination in the open as well as closed positions and should include verification of proper opening and closing operation. As a result, at least the hatch cover sets within the forward 25 % of the ships length and at least one additional set, such that all the sets on the ship are assessed at least once in every five-year period, should be surveyed open, closed and in operation to the full extent in each direction at each Annual Survey, including:

— stowage and securing in open condition;

— proper fit and efficiency of sealing in closed condition; and

— operational testing of hydraulic and power components, wires, chains and link drives

The closing of covers should include the fastening of all peripheral, and cross joint cleats or other securing devices. Particular attention should be paid to the condition of hatch covers in the forward 25 % of the ships length, where the sea loads are normally greatest.

2.3.3 If there are indications of difficulty in operation and securing hatch covers, additional sets above those required in 2.3.2, at the discretion of the surveyor, should be tested in operation.

2.3.4 Where the cargo hatch securing system does not function properly, repairs should be carried out under the supervision of the BKI's surveyor. Where hatch covers or coamings undergo substantial repairs, the strength of securing devices should be upgraded to comply with Annex 11 of IMO Resolution MSC 261 (84) as amended or Rules for Hull (Pt.1, Vol.II) Sec.17.B.5.

2.3.5 For each cargo hatch cover set, at each Annual Survey, the following items should be surveyed:

— cover panels, including side plates, and stiffener attachments that may be accessible in the open position by Close-Up Survey (for corrosion, cracks, deformation);

— sealing arrangements of perimeter and cross joints (gaskets for condition and permanent deformation, flexible seals on combination carriers, gasket lips, compression bars, drainage channels and non-return valves);

— clamping devices, retaining bars, cleating (for wastage, adjustment, and condition of rubber components);

— closed cover locating devices (for distortion and attachment);

— chain or rope pulleys;

— guides;

— guide rails and track wheels;

— stoppers;

— wires, chains, tensioners and gypsies;

— hydraulic system, electrical safety devices and interlocks; and

— end and interpanel hinges, pins and stools where fitted.

2.3.6 At each hatchway, at each Annual Survey, the coamings, with plating, stiffeners and brackets should be checked for corrosion, cracks and deformation, especially of the coaming tops, including close-up survey.

2.3.7 Where considered necessary, the effectiveness of sealing arrangements may be proved by hose or chalk testing supplemented by dimensional measurements of seal compressing components.

2.3.8 Where portable covers, wooden or steel pontoons are fitted, the satisfactory condition of the following should be confirmed:

— wooden covers and portable beams, carriers or sockets for the portable beam, and their securing devices;

— steel pontoons, including close-up survey of hatch cover plating;

— tarpaulins;

— cleats, battens, and wedges;

— hatch securing bars and their securing devices;

— loading pads/bars and the side plate edge;

— guides plates and chocks;

— compression bars; drainage channels and drain pipes (if any).

2.3.9 Examination of flame screens on vents to all bunker tanks.

2.3.10 Examination of bunker and vent piping systems, including ventilators.

2.4 Examination of Cargo holds

2.4.1 Double skin Bulk Carriers 10-15 years of age, the following is to apply:

1) Overall Survey of two selected cargo holds.

2) When considered necessary by the surveyor, or where extensive corrosion exists, thickness measurement is to be carried out. If the results of these thickness measurements indicate that Substantial Corrosion is found, the extent of thickness measurements is to be increased in accordance with Annex B.5. These thickness measurements are to be carried out before the annual survey is credited as completed. Suspect Areas identified at previous surveys are to be examined. Areas of substantial corrosion identified at previous surveys are to have thickness measurements taken.

   For vessels built under the IACS Common Structural Rules, the annual thickness gauging may be omitted where a protective coating has been applied in accordance with the coating manufacturer's requirements and is maintained in good condition.

3) All piping and penetrations in cargo holds, including overboard piping, are to be examined.

2.4.2 Double skin Bulk Carriers over 15 years of age, the following is to apply:

1) Overall Survey of all cargo holds.

2) When considered necessary by the surveyor, or where extensive corrosion exists, thickness measurement is to be carried out. If the results of these thickness measurements indicate that Substantial Corrosion is found, the extent of thickness measurements is to be increased in accordance with Annex B.5. These thickness measurements are to be carried out before the annual survey is credited as completed. Suspect Areas identified at previous surveys are to be examined. Areas of substantial corrosion identified at previous surveys are to have thickness measurements taken.

   For vessels built under the IACS Common Structural Rules, the annual thickness gauging may be omitted where a protective coating has been applied in accordance with the coating manufacturer's requirements and is maintained in good condition.

3) All piping and penetrations in cargo holds, including overboard piping, are to be examined.

2.5 Examination of Ballast tanks

2.5.1 Examination of Ballast Tanks when required as a consequence of the results of the Class Renewal Survey and Intermediate Survey is to be carried out. When considered necessary by the surveyor, or where extensive corrosion exists, thickness measurements are to be carried out. If the results of these thickness measurements indicate that Substantial Corrosion is found, the extent of thickness measurements is to be increased in accordance with Annex B.5. These extended thickness measurements are to be carried out before the survey is credited as completed. Suspect Areas identified at previous surveys are to be examined. Areas of substantial corrosion identified at previous survey are to have thickness measurements taken.

For vessels built under the IACS Common Structural Rules, the annual thickness gauging may be omitted where a protective coating has been applied in accordance with the coating manufacturer's requirements and is maintained in good condition.

2.6 Additional Annual survey requirements after determining compliance with SOLAS XII/12 and XII/13

2.6.1 For ships complying with the requirements of SOLAS XII/12 for hold, ballast and dry space water level detectors, the annual survey is to include an examination and a test, at random, of the water ingress detection systems and of their alarms.

2.6.2 For ships complying with the requirements of SOLAS XII/13 for the availability of pumping systems, the annual survey is to include an examination and a test, of the means for draining and pumping ballast tanks forward of the collision bulkhead and bilges of dry spaces any part of which extends forward of the foremost cargo hold, and of their controls.

2.7 Examination of double-side skin void spaces for bulk carriers exceeding 20 years of age and of 150 m in length and upwards

Examination of double-side skin void spaces, for bulk carriers exceeding 20 years of age and of 150 m in length and upwards, are to be carried out when required as a consequence of the results of the renewal survey (as required by para 4.3.3 and intermediate survey (as required by 3.3.1. When considered necessary by the Administration, or when extensive corrosion exists, thickness measurements should be carried out. If the results of these thickness measurements indicate that substantial corrosion is found, the extent of thickness measurements should be increased in accordance with Annex B.5.4. These extended thickness measurements should be carried out before the survey is credited as completed. Suspect areas identified at previous surveys should be examined. Areas of substantial corrosion identified at previous surveys should have thickness measurements taken.

3. Intermediate Surveys

3.1 General

3.1.1 The schedule of Intermediate Surveys is to be in accordance with the requirements of Section 3, B.1.2.1.

3.2 Double skin Bulk carriers 5 - 10 years of age. The following is to apply:

3.2.1 Ballast Tanks

1) For tanks used for water ballast, an overall survey of representative spaces selected by the Surveyor is to be carried out. The selection is to include fore and aft peak tanks and a number of other tanks, taking into account the total number and type of ballast tanks. If such overall survey reveals no visible structural defects, the examination may be limited to verification that the corrosion prevention system remains efficient.

2) Where POOR coating condition, corrosion or other defects are found in water Ballast tanks or where a hard-Protective Coating was not applied from the time of construction, the examination is to be extended to other Ballast tanks of the same type.

3) In ballast tanks other than double bottom tanks, where a hard-Protective Coating is found in POOR condition, and it is not renewed, or where soft or semi-hard coating has been applied, or where a hard-protective coating was not applied from the time of construction, the tanks in question are to be examined and thickness measurements carried out as considered necessary at annual intervals. When such breakdown of hard protective coating is found in ballast double bottom tanks, or where a soft or semi-hard coating has been applied, or where a hard-protective coating has not been applied, the tanks in question may be examined at annual intervals. When considered necessary by the Surveyor, or where extensive corrosion exists, thickness measurements are to be carried out.

4) In addition to the requirements above, suspect areas identified at previous surveys are to be overall and close-up surveyed.

3.2.2 Cargo Holds

1) An overall survey of all cargo holds.

2) Where considered necessary by the surveyor as a result of the overall survey as described in 1), the survey is to be extended to include a close-up survey of those areas of structure in the cargo holds selected by the Surveyor.

3.2.3 Extent of Thickness Measurements

1) Thickness measurements are to be carried out to an extent sufficient to determine both general and local corrosion levels at areas subject to close-up survey as described in 3.2.2.1) and as provided in 3.2.1.3).

2) The extent of thickness measurement may be specially considered provided the Surveyor is satisfied by the close-up survey, that there is no structural diminution and the hard-protective coatings are found to be in a GOOD condition.

3) Where Substantial Corrosion is found, the extent of thickness measurements is to increase in accordance with the requirements of Annex B.5. These extended thickness measurements are to be carried out before the survey is credited as completed. Suspect Areas identified at previous surveys are to be examined. Areas of substantial corrosion identified at previous surveys are to have thickness measurements taken.

   For vessels built under IACS Common Structural Rules, the identified substantial corrosion areas may be:

   A) protected by coating applied in accordance with the coating manufacturer's requirements and examined at annual intervals to confirm the coating in way is still in good condition, or alternatively

   B) required to be measured at annual intervals.

4) Where the hard-protective coating in cargo holds, is found to be in GOOD condition, the extent of close-up surveys and thickness measurements may be specially considered.

Note:
For existing bulk carriers, where owners may elect to coat or recoat cargo holds as noted above, consideration may be given to the extent of the close-up and thickness measurement surveys. Prior to the coating of cargo holds of existing ships, scantlings should be ascertained in the presence of a surveyor.

3.3 Double skin Bulk Carriers 10 - 15 years of age. The following is to apply:

3.3.1 The requirements of the Intermediate Survey are to be to the same extent to the previous Class Renewal Survey as required in 4. and A.8. However, internal examination of fuel tanks and pressure testing of all tanks are not required unless deemed necessary by the attending surveyor.

3.3.2 In application of 3.3.1 above, the Intermediate survey may be commenced at the second annual survey and be progressed during the succeeding year with a view to completion at the third annual survey in lieu of the application of Section 3, B.1.3.1.7).

3.3.3 In application of 3.3.1 above, an underwater survey may be considered in lieu of the requirements of 4.2.

3.4 Double skin Bulk Carriers over 15 years of age. The following is to apply:

3.4.1 The requirements of the Intermediate Survey are to be to the same extent to the previous Class Renewal Survey as required in 4. and A.8. However, internal examination of fuel tanks and pressure testing of all tanks are not required unless deemed necessary by the attending surveyor.

3.4.2 In application of 3.4.1 above, the Intermediate survey may be commenced at the second annual survey and be progressed during the succeeding year with a view to completion at the third annual survey in lieu of the application of Section 3, B.1.3.1.7).

3.4.3 In application of 3.4.1 above, a survey in dry dock is to be part of the intermediate survey. The overall and close-up surveys and thickness measurements, as applicable, of the lower portions of the cargo holds and water ballast tanks are to be carried out in accordance with the applicable requirements for intermediate surveys, if not already performed.

Note:
Lower portions of the cargo hold and ballast tanks are considered to be the parts below light ballast water line.

4. Class Renewal Surveys

4.1 General

4.1.1 The schedule of Class Renewal Surveys is to be in accordance with the requirements of Section 3, B.1.3.1.

4.1.2 The Class Renewal Survey is to include, in addition to the requirements of the Annual Survey, examination, tests and checks of sufficient extent to ensure that the hull and related piping, as required in 4.1.4, is in a satisfactory condition and is fit for its intended purpose for the new period of class of 5 years to be assigned, subject to proper maintenance and operation and to periodical surveys being carried out at the due dates.

4.1.3 All cargo tanks, Ballast Tanks, including double bottom tanks, pump rooms, pipe tunnels, cofferdams and void spaces bounding cargo tanks, decks and outer hull are to be examined, and this examination is to be supplemented by thickness measurement and testing required in 4.5 and 4.6, to ensure that the structural integrity remains effective. The aim of the examination is to discover Substantial Corrosion, significant deformation, fractures, damages or other structural deterioration, that may be present.

4.1.4 All piping systems within the above Spaces are to be examined and operationally tested to working pressure to attending Surveyor's satisfaction to ensure that tightness and condition remain satisfactory.

4.1.5 The survey extent of ballast tanks converted to void spaces is to be specially considered in relation to the requirements for ballast tanks.

4.2 Dry Dock Survey

4.2.1 A survey in dry dock is to be a part of the Class Renewal Survey. The overall and close-up surveys and thickness measurements, as applicable, of the lower portions of the cargo holds and ballast tanks are to be carried out in accordance with the applicable requirements for Class Renewal Surveys, if not already performed.

4.3 Space Protection

4.3.1 Where provided, the condition of the corrosion prevention system of Ballast Tanks is to be examined. For ballast tanks, excluding double bottom tanks, where a hard-protective coating is found to be in less than GOOD condition and it is not renewed, or where soft or semi-hard coating has been applied, or where a hard-protective coating has not been applied from the time of construction, the tanks in question are to be examined at annual intervals. Thickness measurements are to be carried out as deemed necessary by the surveyor.

When such breakdown of hard protective coating is found in water ballast double bottom tanks and it is not renewed, where a soft or semi-hard coating has been applied, or where a hard-protective coating has not been applied from the time of construction, the tanks in question may be examined at annual intervals. When considered necessary by the surveyor, or where extensive corrosion exists, thickness measurements are to be carried out.

4.3.2 Where a hard-protective coating is provided in cargo holds, and is found in GOOD condition, the extent of close-up surveys and thickness measurements may be specially considered.

4.3.3 For double-side skin void spaces bounding cargo holds for bulk carriers exceeding 20 years of age and of 150 m in length and upwards, where provided, the condition of the corrosion prevention system of void spaces shall be examined. Where a hard protective coating is found to be in POOR condition, and it is not renewed, or where a soft or semi-hard coating has been applied, or where a hard protective coating has not been applied from the time of construction, the void spaces in question shall be examined at annual intervals. Thickness measurements shall be carried out as deemed necessary by the surveyor.

4.4 Hatch Covers and Coamings

The hatch covers and coamings are to be surveyed as follows:

4.4.1 A thorough inspection of the items listed in 2.3 is to be carried out, in addition to all hatch covers and coamings.

4.4.2 Checking of the satisfactory operation of all mechanically operated hatch covers is to be made, including:

— stowage and securing in open condition;

— proper fit and efficiency of sealing in closed condition;

— operational testing of hydraulic and power components, wires, chains, and link drives.

4.4.3 Checking the effectiveness of sealing arrangements of all hatch covers by hose testing or equivalent.

4.4.4 Close-up survey and thickness measurement (see Note 2) of the hatch cover and coaming plating and stiffeners is to be carried out as given in Table 4-I.14 and Table 4-I.15.

4.5 Extent of Overall and Close-up Survey

4.5.1 An Overall Survey of all tanks and spaces is to be carried out at each Class Renewal Survey. Fuel oil tanks in the cargo length area are to be surveyed as follows:

Table 4-I.13 Class Renewal Survey of Fuel Oil Tanks in the Cargo Length Area

Class Renewal Survey No. I Age $\leq$ 5	Class Renewal Survey No. II 5 < Age $\leq$ 10	Class Renewal Survey No. III 10 < Age $\leq$ 15	Class Renewal Survey No. IV and Subsequent 15 < Age
None	One	Two	Half, minimum two

Notes:
1. *These requirements apply to tanks of integral (structural) type.*
2. *If a selection of tanks is accepted to be examined, then different tanks are to be examined at each Class Renewal Survey, on a rotational basis.*
3. *Peak tanks (all uses) are subject to internal examination at each Class Renewal Survey.*
4. *At Class Renewal Survey No. III and subsequent Class Renewal Surveys, one deep tank for fuel oil in the cargo area is to be included, if fitted.*

4.5.2 The minimum requirements for Close-up Surveys at Class Renewal Survey are given in Table 4-I.14.

4.5.3 The Surveyor may extend the Close-up Survey as deemed necessary taking into account the maintenance of the spaces under survey, the condition of the corrosion prevention system and where spaces have structural arrangements or details which have suffered defects in similar spaces or on similar ships according to available information.

4.5.4 For areas in spaces where hard protective coatings are found to be in a GOOD, the extent of Close-up Surveys according to Table 4-I.14 may be specially considered.

4.6 Extent of Thickness Measurement

4.6.1 The minimum requirements for thickness measurements at Class Renewal Survey are given in Table 4-I.13.

4.6.2 Provisions for extended measurements for areas with Substantial Corrosion are given in Annex B.5, and as may be additionally specified in the Survey Programme as required by A.8. These extended thickness measurements are to be carried out before the survey is credited as completed. Suspect Areas identified at previous surveys are to be examined. Areas of substantial corrosion identified at previous surveys are to have thickness measurements taken.

For vessels built under IACS Common Structural Rules, the identified substantial corrosion areas may be:

1) protected by coating applied in accordance with the coating manufacturer's requirements and examined at annual intervals to confirm the coating in way is still in good condition, or alternatively

2) required to be measured at annual intervals.

4.6.3 The Surveyor may further extend the thickness measurements as deemed necessary.

4.6.4 For areas in tanks where hard protective coating are found to be in a GOOD condition, the extent of thickness measurements according to Table 4-I.15 may be specially considered.

Note 2:
Subject to cargo hold hatch covers of approved design which structurally have no access to the internals, close-up survey/thickness measurement shall be done of accessible parts of hatch covers structures.

4.6.5 Transverse sections are to be chosen where the largest reductions are suspected to occur or are revealed from deck plating measurements, one of which is to be in the amidships area.

4.6.6 Representative thickness measurement to determine both general and local levels of corrosion in the shell frames and their end attachments in all cargo holds and water ballast tanks is to be carried out. Thickness measurement is also to be carried out to determine the corrosion levels on the transverse bulkhead plating. The extent of thickness measurements may be specially considered provided the Surveyor is satisfied by the close-up survey, that there is no structural diminution, and the hard-protective coating where applied remains efficient.

4.7 Extent of Tank testing

4.7.1 All boundaries of water ballast tanks, deep tanks and cargo holds used for water ballast within the cargo length area are to be pressure tested. For Fuel Oil Tanks, only representative tanks are to be pressure tested.

4.7.2 The Surveyor may extend the tank testing as deemed necessary

4.7.3 Boundaries of ballast tanks are to be tested with a head of liquid to the top of air pipes.

4.7.4 Boundaries of ballast holds are to be tested with a head of liquid to near to the top of hatches.

4.7.5 Boundaries of fuel oil tanks are to be tested with a head of liquid to the highest point that liquid will rise under service conditions. Tank testing of fuel oil tanks may be specially considered based on a satisfactory external examination of the tank boundaries, and a confirmation from the Master stating that the pressure testing has been carried out according to the requirements with satisfactory results.

4.7.6 The testing of double bottom tanks and other spaces not designed for the carriage of liquid may be omitted, provided a satisfactory internal examination together with an examination of the tank top is carried out.

4.8 Additional Class Renewal Survey requirements after determining compliance with SOLAS XII/12 and XII/13

4.8.1 For ships complying with the requirements of SOLAS XII/12 for hold, ballast and dry space water level detectors, the Class Renewal Survey is to include an examination and a test of the water ingress detection systems and of their alarms.

4.8.2 For ships complying with the requirements of SOLAS XII/13 for the availability of pumping systems, the Class Renewal Survey is to include an examination and a test of the means for draining and pumping ballast tanks forward of the collision bulkhead and bilges of dry spaces any part of which extends forward of the foremost cargo hold, and of their controls.

Table 4-I.14-1 Class Renewal Survey of Double Skin Bulk Carriers, excluding Ore Carriers Minimum Requirements for Close-Up Surveys

<table>
<tr><th colspan="4">Class Renewal Survey [No.] and ship's age [years]</th></tr>
<tr><th>I. age ≤ 5</th><th>II. 5 < age ≤ 10</th><th>III. 10 < age ≤ 15</th><th>IV. and subsequent, age > 15</th></tr>
<tr><td>One transverse web with associated plating and longitudinal in two representative ballast tanks of each type. (This is to include the foremost topside and double side ballast tank on either side)[1]</td><td>One transverse web with associated plating and longitudinal as applicable in each ballast tank[1]</td><td colspan="2">All transverse webs with associated plating and longitudinal as applicable in each water ballast tank[1]</td></tr>
<tr><td rowspan="3">Two selected cargo hold transverse bulkheads, including internal structure of upper and lower stools, where fitted[3]</td><td>Forward and aft transverse bulkheads including stiffening system in a transverse section including topside, hopper side and double side ballast tanks on one side of the ship (i.e. port or starboard)[1]</td><td colspan="2">All transverse bulkheads including stiffening system in each water ballast tank[1]</td></tr>
<tr><td>25% of ordinary transverse web frames, for transverse framing system or 25% of longitudinals for longitudinal framing system on side shell and inner side plating at forward, middle and aft parts, in the fore-most double side tanks[2]</td><td>25% of ordinary transverse web frames, for transverse framing system or 25% of longitudinals for longitudinal framing system on side shell and inner side plating at forward, middle and aft parts, in the foremost double side tanks[2]</td><td>All ordinary transverse web frames for transverse framing system or all of longitudinals for longitudinal framing system on side shell and inner side plating at forward, middle and aft parts, in all double side tanks[2]</td></tr>
<tr><td>One transverse bulkhead in each cargo hold including internal structure of upper and lower stool, where fitted[3]</td><td colspan="2">All cargo hold transverse bulkheads, including internal structure of upper and lower stools, where fitted[3]</td></tr>
<tr><td colspan="4">All cargo hold hatch covers and coamings (platings and stiffeners)[4]</td></tr>
<tr><td></td><td colspan="3">All deck plating and under deck structure inside line of hatch openings between all cargo hold hatches[5]</td></tr>
</table>

[1-5] are areas to be subjected to Close-Up Surveys and thickness measurements

[1] Trans verse web frame or watertight transverse bulkhead in topside, hopper side, double side and double bottom ballast tank, in fore and aft peak tanks. Transverse web frame means a complete transverse web frame ring including adjacent structural members.

[2] Ordinary transverse frames in double side tanks.

[3] Cargo hold transverse bulkheads plating, stiffeners and girders.

[4] Cargo hold hatch covers and coamings. Subject to cargo hold hatch covers of approved design which structurally have no access to the internals, close-up survey/thickness measurement shall be done of accessible parts of hatch covers structures.

[5] Deck plating ins ide line of hatch openings between cargo hold hatches.

Notes:

Close-Up Survey of transverse bulkheads to be carried out at four levels:

- *Level (a): immediately above the inner bottom and immediately above the line of gussets (if fitted) and shedders for ships without lower stool*
- *Level (b): immediately above and below the lower stool shelf plate (for those ships fitted with lower stools), and immediately above the line of the shedder plates*
- *Level (c): about mid-height of the bulkhead*
- *Level (d): immediately below the upper deck plating and immediately adjacent to the upper wing tank, and immediately below the upper stool shelf plate for those ships fitted with upper stools, or immediately below the topside tanks*

Table 4-I.14-2 Class Renewal Survey of Double Skin Bulk Carriers (Ore Carriers) Minimum Requirements for Close-Up Surveys

Class Renewal Survey [No.] and ship's age [years]			
I. age ≤ 5	**II. 5 < age ≤ 10**	**III. 10 < age ≤ 15**	**IV. and subsequent, age > 15**
One web frame ring complete including adjacent structural members in a ballast wing tank.[1]	All web frame rings complete including adjacent structural members in a ballast wing tank[1] One deck transverse including adjacent deck structural members in each remaining ballast tank[1]	All web frame rings complete including adjacent structural members in each ballast tank[1]	
	Forward and aft transverse bulkheads including girder system and adjacent structural members in a ballast wing tank[1]	One web frame ring complete including adjacent structural members in each wing void space.[1] Additional web frame rings in void spaces as deemed necessary by Surveyor[1]	
One transverse bulkhead lower part including girder system and adjacent structural members in a ballast tank[1]	One transverse bulkhead lower part including girder system and adjacent structural members in each remaining ballast tank[1]	All transverse bulkheads including girder system and adjacent structural members in each ballast tank[1]	
Two selected cargo hold transverse bulkheads, including internal structure of upper and lower stools, where fitted[3]	One transverse bulkhead in each cargo hold, including internal structure of upper and lower stools, where fitted [3]	All cargo hold transverse bulkheads, including internal structure of upper and lower stools, where fitted[3]	
All cargo hold hatch covers and coamings (platings and stiffeners)[4]			
	All deck plating and under deck structure inside line of hatch openings between all cargo hold hatches[5]		

[1 – 5] are areas to be subjected to Close-Up Surveys and thickness measurements
[1] Transverse web frame or watertight transverse bulkhead in ballast wing tanks and void spaces.
[2] In fore and aft peak tanks transverse web frame means a complete transverse web frame ring including adjacent structural members.
[3] Cargo hold transverse bulkheads plating, stiffeners and girders
[4] Cargo hold hatch covers and coamings
[5] Deck plating and under deck structure ins ide line of hatch openings between cargo hold hatches

Note:
Close-Up Survey of transverse bulkheads to be carried out at four levels:
- *Level (a): immediately above the inner bottom and immediately above the line of gussets (if fitted) and shedders for ships without lower stool*
- *Level (b): immediately above and below the lower stool shelf plate (for those ships fitted with lower stools), and immediately above the line of the shedder plates*
- *Level (c): about mid-height of the bulkhead*
- *Level (d): immediately below the upper deck plating and immediately adjacent to the upper wing tank, and immediately below the upper stool shelf plate for those ships fitted with upper stools, or immediately below the topside tanks*

Table 4-I.15 Class Renewal Surveys of Double Skin Bulk Carriers Minimum Requirements for Thickness Measurements

<table>
<tr><th colspan="4">Class Renewal Survey [No.] and ship's age [years]</th></tr>
<tr><th>I. age $\leq$ 5</th><th>II. 5 < age $\leq$ 10</th><th>III. 10 < age $\leq$ 15</th><th>IV. and subsequent, age > 15</th></tr>
<tr><td rowspan="4"></td><td>Within the cargo area: two transverse sections of deck plating outside line of cargo hatch openings</td><td>Within the cargo area:
– each deck plate outside line of cargo hatch openings
– 2 transverse sections, one in amidship area, outside line of cargo hatch openings</td><td>Within the cargo area:
– each deck plate outside line of cargo hatch openings
– 3 transverse sections, one in amidship area, outside line of cargo hatch openings
- each bottom plate</td></tr>
<tr><td>Wind and water strakes in way of the two transverse sections indicated above</td><td>All wind and water strakes within the cargo length area</td><td rowspan="2">All wind and water strakes full length</td></tr>
<tr><td colspan="2">Selected wind and water strakes outside the cargo length area</td></tr>
<tr><td colspan="3">Measurement, for general assessment and recording of corrosion pattern, of the structural members subject to close-up survey according to Table 4.-I.14-1 or 4-I.14-2</td></tr>
</table>

II. Additional Requirements for Ships Not Subject to ESP Notation

A. Liquefied Gas Carrier

1. General requirements

1.1 Application

1.1.1 In addition to the requirements specified in Section 3, the requirements in this section apply to Liquefied Gas carriers as defined in the Rules for Ships Carrying Liquefied Gasses in Bulk (Pt.1, Vol.IX).

1.1.2 The following requirements apply to surveys of hull structure and piping systems except piping of cargo installation covered under 2.7, 3.3 and 4.7, in way of pump rooms, compressor rooms, cofferdams, pipe tunnels, void spaces and fuel oil tanks within the cargo area, and all ballast tanks.

1.1.3 Unless otherwise stipulated in the following, the requirements in Section 3 apply. However, if the duplicated survey items are exist, these are not to be applied twice.

1.2 Extent of surveys

1.2.1 The requirements contain the minimum extent of examination, thickness measurement and tank testing. The surveys are to be extended where substantial corrosion and/or structural defects are found and will include an additional Close-Up Survey when necessary.

2. Annual Surveys

2.1 General

2.1.1 The schedule of Annual Surveys is to be in accordance with the requirements of Section 3, B.1.1.1.

2.1.2 The survey is to consist of an examination for the purpose of ensuring, as far as practicable, that the hull and piping are maintained in a satisfactory condition.

2.2 Examination of the hull

— Examination of the hull plating and its closing appliances as far as can be seen.

— Examination of watertight penetrations as far as practicable.

2.3 Examination of weather deck

— Examination of flame screens on vents to all bunker tanks.

— Examination of bunker and vent piping systems.

2.4 Examination of cargo pump rooms and compressor rooms and, as far as practicable, pipe tunnels if fitted.

— Examination of all pump room and compressor room bulkheads for signs of leakage or fractures and, in particular, the sealing arrangements of all penetrations of pump room and compressor room bulkheads.

— Examination of the condition of all piping systems, except those covered by 2.7.

2.5 Suspect Areas

2.5.1 Suspect Areas identified at previous surveys are to be examined. Thickness measurements are to be taken of the areas of substantial corrosion and the extent of thickness measurements is to be increased to determine the extent of areas of substantial corrosion.

Table 4-II.6 may be used as guidance for these additional thickness measurements. These extended thickness measurements are to be carried out before the annual survey is credited as completed.

2.6 Examination of Ballast tanks

2.6.1 Examination of ballast tanks when required as a consequence of the results of the Class Renewal Survey and Intermediate Survey is to be carried out. When considered necessary by the surveyor, or where extensive corrosion exists, thickness measurement is to be carried out. If the results of these thickness measurements indicate that Substantial Corrosion is found, then the extent of thickness measurements are to be increased to determine the extent of areas of substantial corrosion.

Table 4-II.6 may be used as guidance for these additional measurements. These extended thickness measurements are to be carried out before the annual survey is credited as completed.

2.7 Surveys of Cargo Installation

2.7.1 General

1) The log books are to be examined with regard to correct functioning of the cargo containment and cargo handling systems. The hours per day of the reliquefication plants or the boil-off rate is to be considered.

2) All accessible gas-tight bulkhead penetrations including gas-tight shaft sealings are to be visually examined.

3) The means for accomplishing gas tightness of the wheelhouse doors and windows is to be examined. All windows and side scuttles within the area required to be of the fixed type (non-opening) are to be examined for gas tightness. The closing devices for all air intakes and openings into accommodation spaces, service spaces, machinery spaces, control stations and approved openings in superstructures and deckhouses facing the cargo area or bow and stern loading/unloading arrangements, are to be examined.

2.7.2 Cargo handling systems

The cargo handling piping and machinery, e.g. cargo and process piping, cargo heat exchangers, vaporizers, pumps, compressors and cargo hoses are in general to be visually examined, as far as possible, during operation.

2.7.3 Cargo containment venting systems

Venting systems, including protection screens if provided, for the cargo tanks, interbarrrier spaces and hold spaces are to be visually examined externally. It is to be verified that the cargo tank relief valves are sealed and that the certificate for the relief valves opening/closing pressures is onboard.

2.7.4 Instrumentation and safety systems

1) The instrumentation of the cargo installations with regard to pressure, temperature and liquid level is to be verified in good working order by one or more of the following methods:

   — Visual external examination;

— Comparing of read outs from different indicators;

— Consideration of read outs with regard to the actual cargo and/or actual conditions;

— Examination of maintenance records with reference to cargo plant instrumentation maintenance manual;

— Verification of calibration status of the measuring instruments.

2) The logbooks are to be examined for confirmation that the emergency shutdown system has been tested.

2.7.5 Environmental control for cargo containment systems

1) Inert gas/dry air installations including the means for prevention of backflow of cargo vapour to gas-safe spaces are to be verified as being in satisfactory operating condition.

2) For membrane containment systems normal operation of the nitrogen control system for insulation and interbarrier spaces shall be confirmed to the Surveyor by the Master.

2.7.6 Miscellaneous

1) It is to be verified that all accessible cargo piping systems are electrically bonded to the hull.

2) Arrangements for burning methane boil-off are to be visually examined as far as practicable. The instrumentation and safety systems are to be verified as being in good working order in accordance with 2.7.4.1).

3) The relevant instruction and information material such as cargo handling plans, filling limit information, cooling down procedures, etc. are to be verified as being onboard.

4) Mechanical ventilation fans in gas dangerous spaces and zones are to be visually examined.

3. Intermediate Surveys

3.1 General

3.1.1 The schedule of Intermediate Surveys is to be in accordance with the requirements of Section 3, B.1.2.1.

3.2 Ballast tanks

3.2.1 For ships between 5 and 10 years of age, an overall survey of representative ballast tanks is to be carried out. If there is no hard-protective coating, soft or semi-hard coating or POOR coating condition, the examination is to be extended to other ballast tanks of the same type.

3.2.2 For ships over 10 years of age, an overall survey of all ballast tanks is to be carried out.

3.2.3 If such examinations reveal no visible structural defects, the examination may be limited to a verification that the corrosion prevention system remains efficient.

3.2.4 For ballast tanks, excluding double bottom tanks, if there is no hard protective coating, soft or semi-hard coating, or POOR coating condition and it is not renewed, the tanks in question are to be internally examined at annual intervals.

3.2.5 When such conditions are found in double bottom ballast tanks, the tanks in question may be internally examined at annual intervals.

3.2.6 The minimum requirements for close-up surveys at intermediate survey are given in Table 4-II.1.

Table 4-II.1 Intermediate Surveys (Hull) of Liquefied Gas Carriers Minimum Requirements for Close-Up Surveys

10 < age ≤ 15	age > 15
Close-Up Survey of: – all web frames and both transverse bulkheads in a representative ballast tank[1,2] – the upper part of one web frame in another representative ballast tank – one transverse bulkhead in another representative ballast tank[2]	Close-Up Survey of: – all web frames and both transverse bulkheads in two representative ballast tanks[1,2]

[1] Complete transverse web frame including adjacent structural members.
[2] Transverse bulkhead complete, including girder system and adjacent members, and adjacent longitudinal bulkhead structure.

Notes :

1. *Ballast tanks include topside, double hull side, double bottom, hopper side, or any combined arrangement of the aforementioned, and peak tanks where fitted.*
2. *For areas in tanks where protective coating is found to be in good condition, the extent of Close-Up Survey may be specially considered by BKI.*
3. *For ships having independent tanks of type C, with a midship section similar to that of a general cargo ship, the extent of Close-Up Surveys may be specially considered by BKI.*
4. *The extent of Close-Up Surveys may be extended by the Surveyor as deemed necessary, taking into account the maintenance of the tanks under survey, the condition of the corrosion prevention system and also in the following cases:*
   – *in particular, in tanks having structural arrangements or details which have suffered defects in similar tanks, or on similar ships according to available information;*
   – *in tanks having structures approved with reduced scantlings.*

3.3 Surveys of Cargo Installation

3.3.1 General

The requirements of 2.7 apply with the following additions:

3.3.2 Instrumentation and safety systems

1) The instrumentation of the cargo installation with regard to pressure, temperature and liquid level is to be visually examined and to be tested by changing the pressure, temperature and level as applicable and comparing with test instruments. Simulated testing may be accepted for sensors which are not accessible or for sensors located within cargo tanks or inerted hold spaces. The testing is to include testing of alarm and safety functions.

2) The piping of the gas detection system is to be visually inspected for corrosion and damage as far as practicable. The integrity of the suction lines between suction points and analyzing units is to be verified as far as possible. Gas Detectors are to be calibrated or verified with sample gases.

3) The emergency shutdown system is to be tested, without flow in the pipe lines, to verify that the system will cause the cargo pumps and compressors to stop.

3.3.3 Electrical equipment

Electrical equipment in gas-dangerous spaces and zones is to be examined as far as practicable with particular respect to the following:

— Protective earthing (Spot check).

— Integrity of enclosures.

— Damage of outer sheath of cables.

— Function testing of pressurized equipment and of associated alarms.

— Testing of systems for de-energizing non-certified safe electrical equipment located in spaces protected by air-locks, such as electrical motor-rooms, cargo control rooms, etc.

— Testing of insulation resistance of circuits. Such measurements are only to be made when the ship is in a gas-free or inerted condition. Where proper records of testing are maintained consideration may be given to accepting recent readings by the ship's crew.

Note:
See also Guidance for Marine Industry (Pt.1, Vol.AC) Sec.6.R-120 Survey of electrical equipment installed in hazardous areas on tankers

3.3.4 Miscellaneous

The instrumentation and safety systems for burning cargo as fuel are to be examined in accordance with the requirements of 3.3.2.1).

4. Class Renewal Surveys

4.1 General

4.1.1 The schedule of Class Renewal Surveys is to be in accordance with the requirements of Section 3, B.1.3.1.

4.1.2 The Class Renewal Survey is to include, in addition to the requirements of the Annual Survey, examination, tests and checks of sufficient extent to ensure that the hull and related piping, as required in 4.1.4, is in a satisfactory condition and is fit for its intended purpose for the new period of class of 5 years to be assigned, subject to proper maintenance and operation and to periodical surveys being carried out at the due dates.

4.1.3 Ballast Tanks, including double bottom tanks, pump rooms, compressor rooms, pipe tunnels, cofferdams and void spaces bounding cargo tanks, decks and outer hull are to be examined, and this examination is to be supplemented by thickness measurement and testing required in 4.5 and 4.6, to ensure that the structural integrity remains effective. The aim of the examination is to discover Substantial Corrosion, significant deformation, fractures, damages or other structural deterioration, that may be present.

4.1.4 All piping systems within the above spaces, except those covered by 4.7, are to be examined and operationally tested to working pressure to attending Surveyor's satisfaction to ensure that tightness and condition remain satisfactory.

4.1.5 The survey extent of ballast tanks converted to void spaces is to be specially considered in relation to the requirements for ballast tanks.

Note:
For survey of automatic air pipes refer to Section 3, B.1.3.2.13).

4.2 Dry Dock Survey

4.2.1 A survey in dry dock is to be a part of the Class Renewal Survey. The overall and close-up surveys and thickness measurements, as applicable, of the lower portions of the cargo tanks and ballast tanks are to be carried out in accordance with the applicable requirements for Class Renewal Surveys, if not already performed.

Note:
Lower portions of the ballast tanks are considered to be the parts below light ballast water line.

4.3 Tank Protection

4.3.1 Where provided, the condition of corrosion prevention system of ballast tanks is to be examined. For ballast tanks, excluding double bottom tanks, where a hard-protective coating is found in POOR condition and it is not renewed, where soft or semi-hard coating has been applied, or where a hard-protective coating was not applied from time of construction, the tanks in question are to be examined at annual intervals. Thickness measurements are to be carried out as deemed necessary by the surveyor.

When such breakdown of hard protective coating is found in double bottom ballast tanks and it is not renewed, where a soft or semi-hard coating has been applied, or where a hard-protective coating was not applied from the time of construction, the tanks in question may be examined at annual intervals. When considered necessary by the surveyor, or where extensive corrosion exists, thickness measurements are to be carried out.

4.3.2 Where the hard protective coating in ballast tanks is found to be in a GOOD condition, the extent of close-up surveys and thickness measurements may be specially considered.

4.4 Extent of Overall and Close-up Survey

4.4.1 An Overall Survey of all tanks and spaces, excluding fuel oil, lube oil and fresh water tanks, is to be carried out at each Class Renewal Survey.

Note:
For fuel oil, lube oil and fresh water tanks, reference is to be made to Table 3.3.

4.4.2 The minimum requirements for Close-up Surveys at Class Renewal Survey are given in Table 4-II.2.

4.4.3 The Surveyor may extend the Close-up Survey as deemed necessary taking into account the maintenance of the tanks under survey, the condition of the corrosion prevention system and where tanks have structural arrangements or details which have suffered defects in similar tanks or on similar ships according to available information.

4.4.4 For areas in tanks where hard protective coatings are found to be in a GOOD, the extent of Close-up Surveys according to Table 4-II.2 may be specially considered.

Note:
For examination of automatic air pipes reference is to be made to Table 3.4.

4.5 Extent of Thickness Measurement

4.5.1 The minimum requirements for thickness measurements at Class Renewal Survey are given in Table 4-II.3.

4.5.2 The Surveyor may extend the thickness measurements as deemed necessary. When thickness measurements indicate substantial corrosion, the extent of thickness measurements is to be increased to determine the extent of areas of substantial corrosion.

Table 4-II.6 may be used as guidance for these additional thickness measurements.

4.5.3 For areas in tanks where hard protective coating is found to be in a GOOD condition, the extent of thickness measurements according to Table 4-II.3 may be specially considered.

4.5.4 Transverse sections are to be chosen where the largest reductions are suspected to occur or are revealed from deck plating measurements.

Table 4-II.2 Class Renewal Surveys (Hull) of Liquefied Gas Carriers Minimum Requirements for Close-Up Surveys

Class Renewal Survey [No.] and ship's age [years]		
I. age ≤ 5	**II. 5 < age ≤ 10**	**III. and subsequent, age > 10**
One web frame in a representative ballast tank of the topside, hopper side and double hull side type[1] One transverse bulkhead in a ballast tank[3]	All web frames in a ballast tank, which is to be a double hull side tank or a top side tank. If such tanks are not fitted, another ballast tank is to be selected[1] One web frame in each remaining ballast tank[1] One transverse bulkhead in each ballast tank[2]	All web frames in all ballast tanks[1] All transverse bulkheads in all ballast tanks[2]

[1] Complete transverse web frame including adjacent structural members.
[2] Transverse bulkhead complete, including girder system and adjacent members, and adjacent longitudinal bulkhead structure.
[3] Transverse bulkhead lower part including girder system and adjacent structural members.

Notes:
1. *Ballast tanks include topside, double hull side, double bottom, hopper side, or any combined arrangement of the aforementioned, and peak tanks where fitted.*
2. *For areas in tanks where coatings are found to be in good condition, the extent of Close-Up Surveys may be specially considered by BKI.*
3. *For ships having independent tanks of type C, with a midship section similar to that of a general cargo ship, the extent of Close-Up Surveys may be specially considered by BKI.*
4. *The Surveyor may extend the Close-Up Survey as deemed necessary, taking into account the maintenance of the tanks under survey, the condition of the corrosion prevention system and also in the following cases:*
   – *in particular, in tanks having structural arrangements or details which have suffered defects in similar tanks, or on similar ships according to available information;*
   – *in tanks having structures approved with reduced scantlings.*

4.6 Extent of Tank testing

4.6.1 All boundaries of ballast tanks and deep tanks used for water ballast within the cargo length area are to be pressure tested. For Fuel Oil Tanks, the representative tanks are to be pressure tested.

4.6.2 The Surveyor may extend the tank testing as deemed necessary.

4.6.3 Tank testing of fuel oil tanks is to be carried out with a head of liquid to the highest point that liquid will rise under service conditions. Tank testing of fuel oil tanks may be specially considered based on a satisfactory external examination of the tank boundaries, and a confirmation from the Master stating that the pressure testing has been carried out according to the requirements with satisfactory results.

4.7 Surveys of Cargo Installation

4.7.1 General

The requirements of 3.3 apply with the following additions:

4.7.2 Cargo containment survey

1) All cargo tanks are to be examined internally.

2) Special attention is to be given to the cargo tank and insulation in way of chocks, supports and keys. Removal of insulation may be required in order to verify the condition of the tank or the insulation itself if found necessary by the Surveyor.

   Where the arrangement is such that the insulation cannot be examined, the surrounding structures of wing tanks, double bottom tanks and cofferdams are to be examined for cold spots when the cargo tanks are in the cold condition unless voyage records together with the instrumentation give sufficient evidence of the integrity of the insulation system.

3) Non-destructive testing:

   A) Non-destructive testing is to supplement cargo tank inspection with special attention to be given to the integrity of the main structural members, tank shell and highly stressed parts, including welded connections as deemed necessary by the surveyor. However, for type C tanks, this does not mean that non-destructive testing can be dispensed with totally. The following items are, inter alia, considered as highly stressed parts:
      — cargo tanks supports and anti-rolling/anti-pitching devices,
      — web frames or stiffening rings,
      — swash bulkhead boundaries,
      — dome and stump connections to tank shell,
      — foundations for pumps, towers, ladders, etc.,
      — pipe connections.

   B) For independent tanks type B, the extent of non-destructive testing shall be as given in a programme specially prepared for the cargo tank design.

4) The tightness of all cargo tanks is to be verified by an appropriate procedure. Provided that the effectiveness of the ship's gas detection equipment has been confirmed, it will be acceptable to utilize this equipment for the tightness test of independent tanks below deck.

5) Where findings of 1) to 4) or an examination of the voyage records raises doubts as to the structural integrity of a cargo tank, a hydraulic or hydro-pneumatic test is to be carried out. For integral tanks and for independent tanks type A and B, the test pressure is to be in accordance with proper pressure based on design of each tank (correspond to the Maximum Allowable Relief Valve Setting, MARVS of the tank). For independent tanks type C, the test pressure is not to be less than 1,25 times the MARVS.

6) At every other Class Renewal Survey (i.e., 2nd, 4th, 6th, etc.), all independent cargo tanks type C are to be either:

   A) Hydraulically or hydro-pneumatically tested to 1,25 times MARVS, followed by nondestructive testing in accordance with 3).A), or

   B) Subjected to a thorough, planned non-destructive testing. This testing is to be carried out in accordance with a programme specially prepared for the tank design. If a special programme does not exist, the following applies:
      — cargo tank supports and anti-rolling/anti-pitching devices,
      — stiffening rings,
      — Y-connections between tank shell and a longitudinal bulkhead of bilobe tanks,
      — swash bulkhead boundaries,
      — dome and sump connections to the tank shell,
      — foundations for pumps, towers, ladders etc.,
      — pipe connections.

   At least 10% of the length of the welded connections in each of the above mentioned areas is to be tested. This testing is to be carried out internally and externally as applicable. Insulation is to be removed as necessary for the required non-destructive testing.

7) As far as practicable all hold spaces and hull insulation (if provided), secondary barriers and tank supporting structures are to be visually examined. The secondary barrier of all tanks is to be checked for their effectiveness by means of a pressure/vacuum test, a visual examination or another acceptable method.

8) Membrane and semi-membrane tank

A) For membrane and semi-membrane tanks systems, inspection and testing are to be carried out in accordance with programmes specially prepared in accordance with an approved method for the actual tank system.

B) For membrane containment systems a tightness test of the primary and secondary barrier shall be carried out in accordance with the system designers' procedures and acceptance criteria as approved by BKI. Low differential pressure tests may be used for monitoring the cargo containment system performance, but are not considered an acceptable test for the tightness of the secondary barrier.

C) For membrane containment systems with glued secondary barriers if the designer's threshold values are exceeded, an investigation is to be carried out and additional testing such as thermographic or acoustic emissions testing should be carried out.

9) The pressure/vacuum relief valves, rupture disc and other pressure relief devices for interbarrier spaces and hold spaces are to be opened, examined, tested and readjusted as necessary, depending on their design.

10) The pressure relief valves for the cargo tanks are to be opened for examination, adjusted, function tested, and sealed. If the cargo tanks are equipped with relief valves with non-metallic membranes in the main or pilot valves, such non-metallic membranes are to be replaced. Where a proper record of continuous overhaul and retesting of individually identifiable relief valves is maintained, consideration will be given to acceptance on the basis of opening, internal examination, and testing of a representative sampling of valves, including each size and type of liquefied gas or vapor relief valve in use, provided there is logbook evidence that the remaining valves have been overhauled and tested since crediting of the previous Class Renewal Survey.

4.7.3 Piping systems

1) The cargo, liquid nitrogen and process piping systems, including valves, actuators, compensators, etc. are to be opened for examination as deemed necessary. Insulation is to be removed as deemed necessary to ascertain the condition of the pipes. If the visual examination raises doubt as to the integrity of the pipelines, a pressure test at 1,25 times the MARVS for the pipeline is to be carried out. After re-assembly the complete piping systems are to be tested for leaks.

2) The pressure relief valves are to be function-tested. A random selection of valves is to be opened for examination and adjusted.

4.7.4 Components

Cargo pumps, compressors, process pressure vessels, liquid nitrogen tanks, heat exchangers and other components, including prime movers, used in connection with cargo handling and methane boil-off burning are to be examined as required in the BKI Rules for periodical survey of machinery.

4.7.5 Miscellaneous

.1 Systems for removal of water or cargo from interbarrier spaces and holds are to be examined and tested as deemed necessary.

.2 All gas-tight bulkheads are to be inspected. The effectiveness of gas-tight shaft sealing is to be verified.

.3 The following equipment is to be examined: hoses and spool pieces used for segregation of piping systems for cargo, inert gas and bilging.

.4 It is to be verified that all cargo piping systems are electrically bonded to the hull.

Table 4-II.3 Class Renewal Surveys (Hull) of Liquefied Gas Carriers Minimum Requirements for Thickness Measurements

Class Renewal Survey [No.] and ship's age [years]			
I. age ≤ 5	**II. 5 < age ≤ 10**	**III. 10 < age ≤ 15**	**IV. and subsequent, age > 15**
One section of deck plating for the full beam of the ship within 0,5**L** amidships in way of a ballast tank, if any	Within the cargo area: – each deck plate – one transverse section within 0,5**L** amidships in way of a ballast tank, if any	Within the cargo area: – each deck plate – two transverse sections[1] – all wind and water strakes	Within the cargo area: – each deck plate three transverse sections[1] – each bottom plate duct keel plating and internals
	Selected wind and water strakes outside the cargo area		All wind and water strakes, full length
Measurements, for general assessment and recording of corrosion pattern, of those structural members subject to Close-Up Survey according to Table 4-II.2			
Suspect areas			

[1] At least one section is to include a ballast tank within 0,5**L** amidships, if any.

Notes:

1. *For ships having independent tanks of type C, with a midship section similar to that of a general cargo ship, the extent of thickness measurements may be increased to include the tank top plating at the discretion of the Surveyor.*
2. *For areas in spaces where coatings are found to be in good condition, the extent of thickness measurements may be specially considered by BKI.*
3. *The Surveyor may extend the thickness measurements as deemed necessary. Where substantial corrosion is found, the extent of thickness measurements is to be increased to the satisfaction of the Surveyor.*

B. General Dry Cargo Ships

1. General requirements

1.1 Application

1.1.1 In addition to the requirements specified in Section 3, the requirements in this section apply to all self-propelled general dry cargo ships of 500 GT and above carrying solid cargoes other than[12)]:

— bulk carriers and double skin bulk carriers subject to the enhanced survey programme (**ESP**)

— dedicated container carriers

— Ro-Ro cargo ships

— refrigerated cargo ships

— dedicated wood chip carriers

— dedicated cement carriers

— livestock carriers

— deck cargo ship[13)]

— general dry cargo ships of double side-skin construction, with double side-skin extending for the length of the cargo area, and for the height of the cargo hold to the upper deck[14)]

1.1.2 For General Dry Cargo Ships with hybrid cargo hold arrangements, e.g. with some cargo holds of single-side skin and others of double-side skin, the requirements are to be applied only to structure in way of the single-side skin cargo hold region.

[12)] The requirements of paragraphs 3.7 and 5.7 also apply to those cargo ships, which, although belonging to the ship types listed in 1.1.1 that are excluded from the application of this section, are fitted with a single cargo hold.

[13)] A deck cargo ship is a ship that is designed to carry cargo exclusively above deck without any access for cargo below deck.

[14)] Special consideration may also be given to ships that are of double side-skin construction but with single skin in way of several frame spaces e.g. in way of a cargo hold entrance or in way of forebody hull form at the forward end of the foremost cargo hold

1.1.3 The requirements apply to surveys of hull structure and piping systems in way of cargo holds, cofferdams, pipe tunnels, void spaces and fuel oil tanks within the cargo area and all ballast tanks.

1.1.4 The requirements contain the minimum extent of examination, thickness measurements and tank testing. The survey is to be extended when Substantial Corrosion and/or structural defects are found and include additional Close-up Survey when necessary.

2. Procedures for Thickness Measurements

2.1 General

2.1.1 The required thickness measurements, if not carried out by BKI itself, are to be witnessed by BKI Surveyor. The Surveyor is to be on board to the extent necessary to control the process. In this case, the control of thickness measurement process is to be in accordance with the separate requirements specified by BKI.

2.1.2 The thickness measurement firm is to be part of the survey planning meeting to be held prior to commencing the survey.

2.1.3 Thickness measurements of structures in areas where Close-up Surveys are required shall be carried out simultaneously with Close-up Surveys. See Section 3, D.1.4.

2.2 Certification of Thickness Measurement Firm

The thickness measurements are to be carried out by a firm certified by BKI according to principles stated in Section 3, A.5.3.1.

2.3 Reporting

2.3.1 A thickness measurement report is to be prepared. The report is to give the location of measurements, the thickness measured as well as corresponding original thickness. Furthermore, the report is to give the date when the measurements were carried out, type of measurement equipment, names of personnel and their qualifications and has to be signed by the operator.

2.3.2 The Surveyor is to review the final thickness measurement report and countersign the cover page.

3. Annual Survey

3.1 General

3.1.1 The due range of Annual Survey is to be in accordance with the requirements of Section 3, B.1.1.1.

3.1.2 The survey is to consist of an examination for the purpose of ensuring, as far as practicable, that the hull, hatch covers, coming and piping are maintained in a satisfactory condition.

3.2 Examination of the hull

3.2.1 Examination of the hull plating and its closing appliances as far as can be seen.

3.2.2 Examination of watertight penetrations as far as practicable.

3.3 Examination of weather decks, hatch covers and coamings

3.3.1 Confirmation is to be obtained that no unapproved changes have been made to the hatch covers, hatch coamings and their securing and sealing devices since the last survey.

3.3.2 Where mechanically operated steel covers are fitted, checking the satisfactory condition of:

— hatch covers; including close-up survey of hatch cover plating;

— tightness devices of longitudinal, transverse and intermediate cross junctions (gaskets, gasket lips, compression bars, drainage channels);

— clamping devices, retaining bars, cleating;

— chain or rope pulleys;

— guides;

— guide rails and track wheels;

— stoppers, etc;

— wires, chains, gypsies, tensioning devices;

— hydraulic system essential to closing and securing;

— safety locks and retaining devices.

3.3.3 Where portable covers, wooden or steel pontoons are fitted, checking the satisfactory condition where applicable of:

— wooden covers and portable beams, carriers or sockets for the portable beam, and their securing devices;

— steel pontoons;

— tarpaulins;

— cleats, battens and wedges;

— hatch securing bars and their securing devices;

— loading pads/bars and the side plate edge;

— guide plates and chocks;

— compression bars, drainage channels and drain pipes (if any).

3.3.4 Checking the satisfactory condition of hatch coaming plating and their stiffeners including close-up survey.

3.3.5 Random checking of the satisfactory operation of mechanically operated hatch covers is to be made including:

— stowage and securing in open condition;

— proper fit and efficiency of sealing in closed condition;

— operational testing of hydraulic and power components, wires, chains, and link drives.

Note:
For survey of air pipes, flame screens on vents and ventilators refer to Section 3, B.1.1.2.

3.4 Suspect Areas

Suspect Areas identified at previous surveys are to be examined. Thickness measurements are to be taken of the areas of substantial corrosion and the extent of thickness measurements is to be increased to determine the extent of areas of substantial corrosion. Table 4-II.6 may be used as guidance for these additional thickness measurements. These extended thickness measurements are to be carried out before the annual survey is credited as completed.

3.5 Examination of Cargo Holds

3.5.1 For Ships 10-15 years of age, the following is to apply:

1) Overall Survey of one forward and one after cargo hold and their associated tween deck spaces.

2) When considered necessary by the surveyor, or where extensive corrosion exists, thickness measurement is to be carried out. If the results of these thickness measurements indicate that Substantial Corrosion is found, then the extent of thickness measurements is to be increased to determine the extent of areas of substantial corrosion. Table 4-II.6 may be used as guidance for these additional measurements. These extended thickness measurements are to be carried out before the annual survey is credited as completed.

3.5.2 For Ships over 15 years of age, the following is to apply:

1) Overall Survey of all cargo holds and tween deck spaces.

2) Close-up examination of sufficient extent, minimum 25% of frames, to establish the condition of the lower region of the shell frames including approx. lower one third length of side frame at side shell and side frame end attachment and the adjacent shell plating in a forward lower cargo hold and one other selected lower cargo hold. Where this level of survey reveals the need for remedial measures, the survey is to be extended to include a Close-up Survey of all of the shell frames and adjacent shell plating of those cargo holds and associated tween deck spaces (as applicable) as well as a Close-up Survey of sufficient extent of all remaining cargo holds and tween deck spaces (as applicable).

3) When considered necessary by the surveyor, or where extensive corrosion exists thickness measurement is to be carried out. If the results of these thickness measurements indicate that Substantial Corrosion is found, then the extent of thickness measurements is to be increased to determine the extent of areas of substantial corrosion. Table 4-II.6 may be used as guidance for these additional measurements. These extended thickness measurements are to be carried out before the annual survey is credited as completed.

4) Where the protective coating in cargo holds, as applicable, is found to be in GOOD condition the extent of close-up surveys may be specially considered.

5) All piping and penetrations in cargo holds, including overboard piping, are to be examined.

3.6 Examination of ballast tanks

Examination of ballast tanks when required as a consequence of the results of the Class Renewal Survey and Intermediate Survey is to be carried out. When considered necessary by the surveyor, or where extensive corrosion exists, thickness measurement is to be carried out. If the results of these thickness measurements indicate that Substantial Corrosion is found, then the extent of thickness measurements are to be increased to determine the extent of areas of substantial corrosion. Table 4-II.6 may be used as guidance for these additional measurements. These extended thickness measurements are to be carried out before the annual survey is credited as completed.

3.7 Additional requirements for single hold cargo ships after determining compliance with SOLAS II-I/23-3 and II-I/25[15)]

For ships complying with the requirements of SOLAS II-I/25 for hold water level detectors, the annual survey is to include an examination and a test, at random, of the water ingress detection system and of their alarms.

4. Intermediate Survey

4.1 General

4.1.1 The due range of Intermediate Survey is to be in accordance with the requirements of Section 3, B.1.2.1.

4.1.2 Those items which are additional to the requirements of the Annual Survey may be surveyed either at or between the 2nd and 3rd Annual Survey.

4.1.3 A survey planning meeting is to be held prior to the commencement of the survey.

4.1.4 Concurrent crediting to both Intermediate Survey (IS) and Class Renewal Survey (SS) for surveys and thickness measurements of spaces are not acceptable.

4.2 Scope

4.2.1 General

The survey extent is dependent on the age of the vessel as specified in 4.2.2 to 4.2.4.

4.2.2 Ships 5 - 10 Years of Age, the following is to apply:

1) Examination Ballast tanks

   A) For ballast tanks, an Overall Survey of Representative Tanks selected by the Surveyor is to be carried out. If such overall survey reveals no visible structural defects, the examination may be limited to a verification that the corrosion prevention system remains efficient.

   B) Where POOR coating condition, soft or semi-hard coating, corrosion or other defects are found in ballast tanks or where a hard-protective coating was not applied from the time of construction, the examination is to be extended to other ballast tanks of the same type.

   C) In ballast tanks other than double bottom tanks, where a hard-protective coating is found in POOR condition, and it is not renewed, where soft or semi-hard coating has been applied, or where a hard-protective coating was not applied from time of construction, the tanks in question are to be examined and thickness measurements carried out as considered necessary at annual intervals. When such breakdown of hard protective coating is found in double bottom ballast tanks, where a soft or semi-hard coating has been applied, or where a hard-protective coating has not been applied, the tanks in question may be examined at annual intervals. When considered necessary by the surveyor, or where extensive corrosion exists, thickness measurements are to be carried out.

   D) In addition to the requirements above, areas found suspect at previous surveys are to be surveyed in accordance with the provisions indicated in 3.4.

2) Cargo Holds

   A) An Overall Survey of one forward and one after cargo hold and their associated tween deck spaces.

   B) Areas found suspect at previous surveys are to be surveyed in accordance with the provisions indicated in 3.4.

[15)] The requirements of paragraphs 3.7 and 5.7 also apply to those cargo ships, which, although belonging to the ship types listed in 1.1.1 that are excluded from the application of this Section, are fitted with a single cargo hold.

4.2.3 Ships 10-15 Years of Age, the following is to apply:

1) Examination Ballast tanks

   A) For ballast tanks, an overall survey of all tanks is to be carried out. If such overall survey reveals no visible structural defects, the examination may be limited to a verification that the corrosion prevention system remains efficient.

   B) The requirements of 4.2.2.1). C) and D) also apply.

2) Cargo Holds

   A) An Overall Survey of all cargo holds and tween deck spaces.

   B) Areas found suspect at previous surveys are to be surveyed in accordance with the provisions indicated in 3.4.

   C) When considered necessary by the surveyor, or where extensive corrosion exists, thickness measurement is to be carried out. If the results of these thickness measurements indicate that Substantial Corrosion is found, then the extent of thickness measurements is to be increased to determine the extent of areas of substantial corrosion. Table 4-II.6 may be used as guidance for these additional measurements. These extended thickness measurements are to be carried out before the survey is credited as completed.

4.2.4 Ships over 15 Years of Age, the following is to apply:

1) The requirements of the Intermediate Survey are to be to the same extent as the previous Class Renewal Survey as required in 5., except for item 2.c) in column 4 of Table 4-II.5. However, tank testing specified in 5.6, survey of automatic air pipe heads (see Notes in 5.1.6 and 5.4.4) and internal examination of fuel oil, lube oil and fresh water tanks (see 5.4.1) are not required unless deemed necessary by the attending surveyor.

2) In application of 1), the intermediate survey may be commenced at the second annual survey and be progressed during the succeeding year with a view to completion at the third annual survey in lieu of the application of Section 3, B.1.3.1.7).

3) In lieu of the requirements of 5.1.7, an in-water survey, according to the provisions of Section 3, B.1.6.1.1), may be considered as equivalent.

5. Class Renewal Surveys

5.1 General

5.1.1 The due range of Renewal Surveys is to be in accordance with the requirements of Section 3, B.1.3.1.

5.1.2 A survey planning meeting is to be held prior to the commencement of the survey.

5.1.3 The Renewal Survey is to include, in addition to the requirements of the Annual Surveys, examination, tests and checks of sufficient extent to ensure that the hull and related piping, as required in 5.1.5, are in a satisfactory condition and fit for the intended purpose for the new period of class of 5 years to be assigned, subject to proper maintenance and operation and to periodical surveys being carried out at the due dates.

5.1.4 All cargo holds, ballast tanks, including double bottom tanks, pump rooms, compressor rooms, pipe tunnels, cofferdams and void spaces bounding cargo tanks, decks and outer hull are to be examined, and this examination is to be supplemented by thickness measurement and testing as required in 5.5 and 5.6, to ensure that the structural integrity remains effective.

The aim of the examination is to discover Substantial Corrosion, significant deformation, fractures, damages or other structural deterioration, that may be present.

5.1.5 All piping systems within the above spaces are to be examined and operationally tested to working pressure to attending Surveyor's satisfaction to ensure that tightness and condition remain satisfactory.

5.1.6 The survey extent of ballast tanks converted to void spaces is to be specially considered in relation to the requirements for ballast tanks.

Note:
For survey of automatic air pipes refer to Section 3, B.1.3.2.13)

5.1.7 A survey in dry dock is to be a part of the Class Renewal Survey. The overall and close-up surveys and thickness measurements, as applicable, of the lower portions of the cargo holds and ballast tanks are to be carried out in accordance with the applicable requirements for Class Renewal Surveys, if not already performed.

Note:
Lower portions of the cargo holds and ballast tanks are considered to be the parts below light ballast water line.

5.2 Tank Protection

5.2.1 Where provided, the condition of corrosion prevention system of ballast tanks is to be examined. For ballast tanks, excluding double bottom tanks, where a hard-protective coating is found in POOR condition and it is not renewed, where soft or semi-hard coating has been applied, or where a hard-protective coating was not applied from time of construction, the tanks in question are to be examined at annual intervals. Thickness measurements are to be carried out as deemed necessary by the surveyor.

5.2.2 When such breakdown of hard protective coating is found in double bottom ballast tanks and it is not renewed, where a soft or semi-hard coating has been applied, or where a hard-protective coating was not applied from the time of construction, the tanks in question may be examined at annual intervals. When considered necessary by the surveyor, or where extensive corrosion exists, thickness measurements are to be carried out.

5.2.3 Where the hard-protective coating in tanks is found to be in a GOOD condition, the extent of close-up surveys and thickness measurements may be specially considered.

5.3 Hatch Covers and Coamings

A thorough inspection of the items listed in 3.3 is to be carried out.

5.3.1 Checking of the satisfactory operation of all mechanically operated hatch covers is to be made, including:

— stowage and securing in open condition;

— proper fit and efficiency of sealing in closed conditions:

— operational testing of hydraulic and power components, wires, chains and link drives.

5.3.2 Checking the effectiveness of sealing arrangements of all hatch covers by hose testing or equivalent is to be carried out.

5.3.3 Close-up survey and thickness measurement[16)] of the hatch cover and coaming plating and stiffeners is to be carried out as given in Table 4-II.4 and Table 4-II.5.

[16)] Subject to cargo hold hatch covers of approved design which structurally have no access to the internals, close-up survey/thickness measurement shall be done of accessible parts of hatch covers structures.

5.4 Extent of Overall and Close-up Survey

5.4.1 An Overall Survey of all tanks and spaces, excluding fuel oil, lube oil and fresh water tanks, is to be carried out at each Class Renewal Survey.

Note:
For fuel oil, lube oil and fresh water tanks, reference is to be made to Table 3.3.

5.4.2 The minimum requirements for close-up surveys at Class Renewal Survey are given in Table 4-II.4.

5.4.3 The Surveyor may extend the close-up survey as deemed necessary taking into account the maintenance of the tanks under survey, the condition of the corrosion prevention system and where tanks have structural arrangements or details which have suffered defects in similar spaces or on similar ships according to available information.

5.4.4 For areas in tanks where hard protective coatings are found to be in a GOOD condition, the extent of close-up surveys according to Table 4-II.4 may be specially considered.

Note:
For examination of automatic air pipe heads, reference is to be made to Table 3.4.

5.5 Extent of Thickness Measurement

5.5.1 The minimum requirements for thickness measurements at Class Renewal Survey are given in Table 4-II.5.

5.5.2 The Surveyor may extend the thickness measurements as deemed necessary. When thickness measurements indicate substantial corrosion, the extent of thickness measurements is to be increased to determine the extent of areas of substantial corrosion. Table 4-II.6 may be used as guidance for these additional thickness measurements.

5.5.3 For areas in tanks where hard protective coatings are found to be in a GOOD condition, the extent of thickness measurement according to Table 4-II.5 may be specially considered.

5.5.4 Transverse sections are to be chosen where the largest reductions are suspected to occur or are revealed from deck plating measurements.

Table 4-II.4 Minimum Requirements for Close-Up Survey at Hull Class Renewal Survey of General Dry Cargo Ships

Class Renewal survey [No.] and ship's age [years]			
I.age ≤ 5	**II. 5< age ≤10**	**III. 10 < age ≤ 15**	**IV. and subsequent, age >15**
A. Selected shell frames in one forward and one aft cargo hold and associated tween deck spaces. B. One selected cargo hold transverse bulkhead. D. All cargo hold hatch covers and coamings (plating and stiffeners).	A. Selected shell frames in all cargo holds and tween deck spaces. B. One transverse bulk-head in each cargo hold. B. Forward and aft transverse bulkhead in one side ballast tank, including stiffening system C. One transverse web with associated plating and framing in two representative ballast tanks of each type (i.e. topside,hopper side, side tank or double bottom tank). D. All cargo hold hatch covers and coamings (plating and stiffeners) E. Selected areas of all deck plating and under-deck structure inside line of hatch openings between cargo hold hatches. F. Selected areas of inner bottom plating.	A. All shell frames in the forward lower cargo hold and 25% frames in each of the remaining cargo holds and tween deck spaces including upper and lower end attachments and adjacent shell plating. B. All cargo hold transverse bulkheads B. All transverse bulkheads in ballast tanks, including stiffening system. C. All transverse webs with associated plating and framing in each ballast tank. D. All cargo hold hatch covers and coamings (plating and stiffener) E. All deck plating and underdeck structure inside line of hatch openings between cargo hold hatches. F. All areas of inner bot-tom plating.	A. All shell frames in all cargo holds and tween deck spaces including upper and lower end attachments and adjacent shell plating. Areas (B – F) as for Class Renewal survey No.III.

A. Cargo hold transverse frames.
B. Cargo hold transverse bulkhead plating, stiffeners and girders.
C. Transverse web frame or watertight transverse bulkhead in ballast tanks.
D. Cargo hold hatch covers and coamings. Subject to cargo hold hatch covers of approved design which Structurally have no access to the internals, close-up survey/thickness measurement shall be done of accessible parts of hatch covers structures.
E. Deck plating and underdeck structure inside line of hatch openings between cargo hold hatches.
F. Inner bottom plating.
See Fig. 4-II.1 and 4-II.2 for the areas corresponding to A, B, C, D, E and F.

Note:
Close-upsurvey of cargo hold transverse bulkheads to be carried out at the following levels:
– immediately above the inner bottom and immediately above the tween decks, as applicable
– mid-height of the bulkheads for holds without tween decks
– immediately below the main deck plating and tween deck plating

Table 4-II.5 Minimum Requirements for the Thickness Measurement at Hull Class Renewal Surveys of General Dry Cargo Ships

Class Renewal survey [No.] and ship's age [years]			
I.age $\leq$ 5	**II. 5 < age $\leq$10**	**III. 10 < age $\leq$ 15**	**IV. and subsequent, age >15**
1. Suspect areas.	1. Suspect areas. 2. One transverse section of deck plating in way of a cargo space within the amidships 0,5**L**. 3. Measurement for general Assessment and recording of corrosion pattern of those structural members subject to closeup survey according to Table 4-II.4.	1. Suspect areas. 2. Two transverse sections within the amidships 0,5**L** in way of two different cargo spaces. 3. Measurement for general assessment and recording of corrosion pattern of those structural members subject to close-up survey according to Table 4-II.4. 4. Within the cargo length area, each deck plate outside line of cargo hatch openings. 5. All wind and water strakes within the cargo length area. 6. Selected wind and water strakes outside	1. Suspect areas. 2. Within the cargo length area: a) A minimum of three transverse sections within the amidships 0,5**L**. b) Each deck plate outside line of cargo hatch ope-nings. c) Each bottom plate, including lower turn of bilge. d) Duct keel or pipe tunnel plating and internals. 3. Measurement for general assessment and recording of corrosion pattern of those structural members subject to close-up survey according to Table 4-II.4. 4. All wind and water strakes full length

Notes:
1. *Thickness measurement locations should be selected to provide the best representative sampling of areas likely to be most exposed to corrosion, considering cargo and ballast history and arrangement and condition of protective coatings.*
2. *For ships less than 100 m in length, the number of transverse sections required at Class Renewal Survey No. III may be reduced to one and the number of transverse sections at Class Renewal Survey No.IV and subsequent surveys may be reduced to two.*

Table 4-II.6 Additional Thickness Measurements In Way of Substantial corrosion

Structural Member	Extent of Measurement	Pattern of Measurement
Plating	Suspect area and adjacent plates.	5 point pattern over 1 m^2.
Stiffeners	Suspect area.	3 measurements each in line across web and flange.

5.6 Extent of Tank Testing

5.6.1 All boundaries of ballast tanks and deep tanks used for water ballast within the cargo area are to be pressure tested. For fuel oil tanks, the representative tanks are to be pressure tested.

5.6.2 The Surveyor may extend the tank testing as deemed necessary.

5.6.3 Tank testing of fuel oil tanks is to be carried out with a head of liquid to the highest point that liquid will rise under service conditions. Tank testing of fuel oil tanks may be specially considered based on a satisfactory external examination of the tank boundaries, and a confirmation from the Master stating that the pressure testing has been carried out according to the requirements with satisfactory results.

5.7 Additional requirements for single hold cargo ships after determining compliance with SOLAS II-I/25[15)]

For ships complying with the requirements of SOLAS II-I/25 for hold water level detectors, the Class Renewal Survey is to include an examination and a test of the water ingress detection system and their alarms.

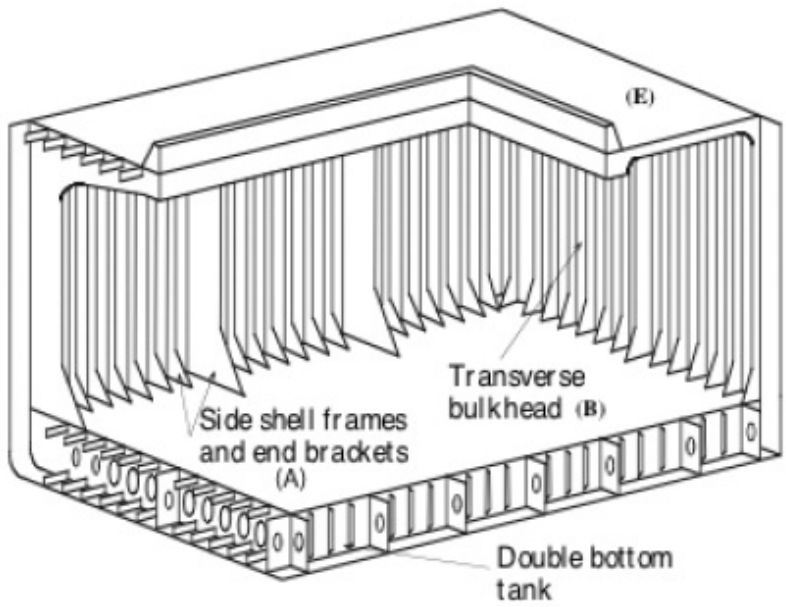

Single deck ship

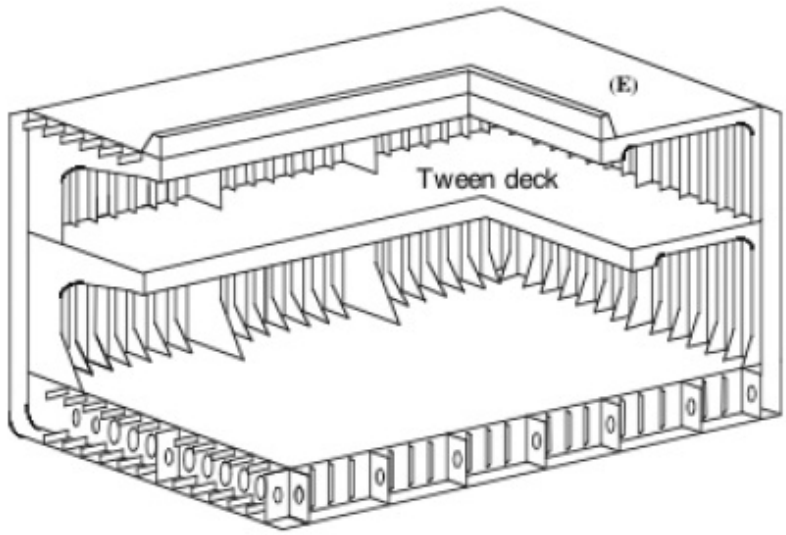

Tween deck ship

Fig. 4-II.1 Areas for Close-Up Survey of General Dry Cargo Ships

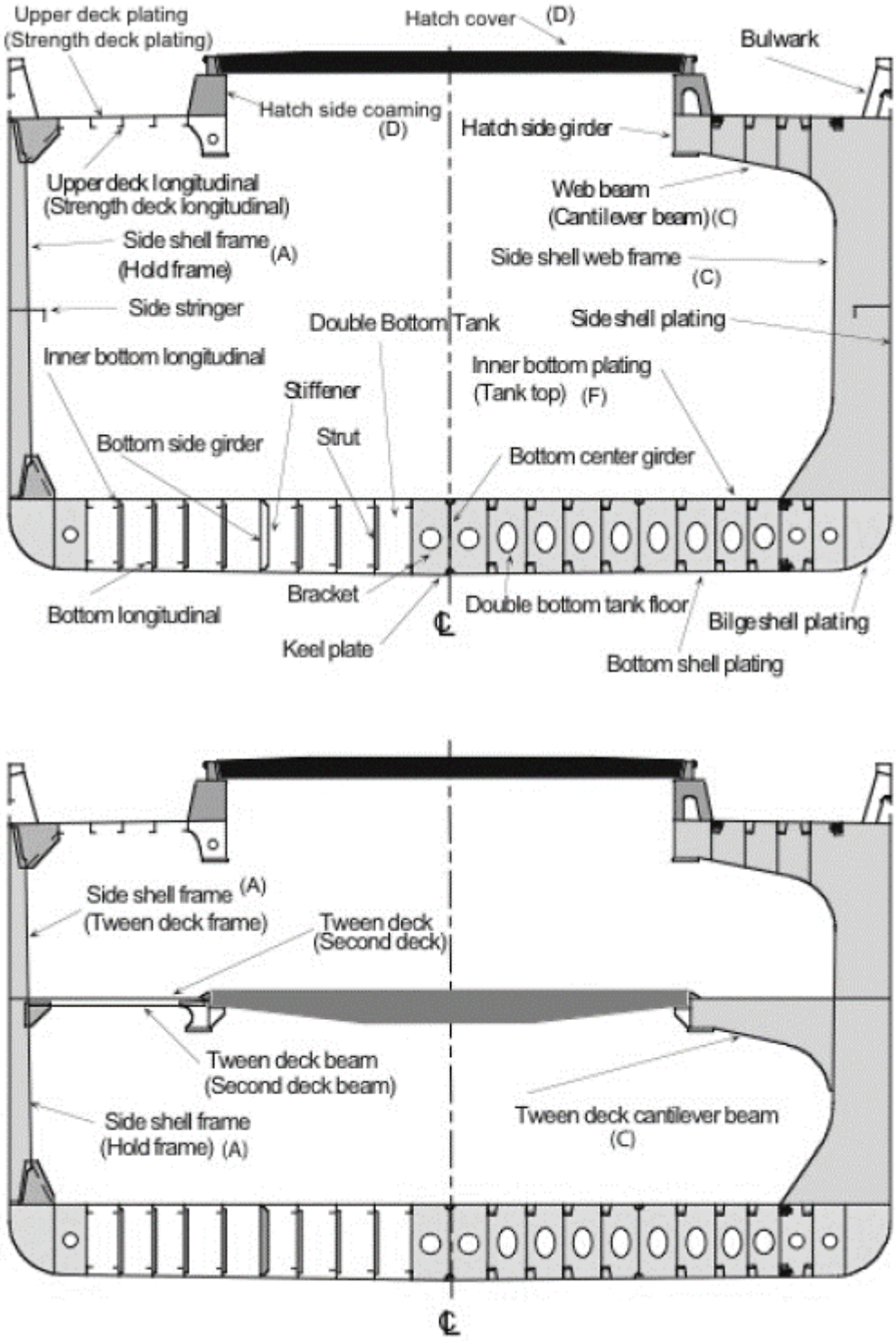

Fig. 4-II.2 Areas for Close-Up Survey of General Dry Cargo Ships

C. Shell Doors, Stern Doors, Inner Doors and Bow Doors of Ro-Ro Ships

1. Application

1.1 In addition to the requirements specified in Section 3, the requirements in this section are applicable to the survey of bow, inner, side shell and stern doors of Ro-Ro passenger (Ro-Pax) and Ro-Ro cargo ships, to the extent appropriate to the arrangement and equipment of each ship.

1.2 Special consideration may be given in application of relevant sections of this subsection to commercial vessels owned or chartered by Governments, which are utilized in support of military operations or service.

2. Annual Surveys

2.1 The survey is to consist of an examination to verify, as far as is practicable, that the bow, inner, side shell and stern doors are maintained in a satisfactory condition.

2.2 Confirmation is to be obtained that no unapproved changes have been made to the bow, inner, side shell and stern doors since the last survey.

2.3 Documents

If an Operating and Maintenance Manual (OMM) is required, it is to be verified that an approved copy is on board and any possible modifications are included.

It is to be verified that documented operating procedures for closing and securing doors are kept on board and posted at an appropriate place.

The surveyor shall examine the OMM with special attention to the register of inspections and its contents as a basis for the survey.

2.4 Structural examination

Bow, inner, side shell and stern doors are to be examined with particular attention paid to:

1) Structural arrangement of doors including plating, secondary stiffeners, primary structure, hinging arms and welding;
2) Shell structure surrounding the opening of the doors and the securing, supporting and locking devices including shell plating, secondary stiffeners, primary structure, and welding;
3) Hinges and bearings, thrust bearings;
4) Hull and door side supports for securing, supporting and locking devices;
5) Close-up survey of securing, supporting and locking devices including welding, refer to Table 4-II.7.

Whenever a crack is found, an examination with NDT is to be carried out in the surrounding area and for similar items as considered necessary by the surveyor.

2.5 Measurement of clearances

Clearances of hinges, bearings and thrust bearings are to be taken, where no dismantling is required. Where the function test is not satisfactory, dismantling may be required to measure the clearances. If dismantling is carried out, a visual examination of hinge pins and bearings together with NDT of the hinge pin is to be carried out. Clearances of securing, supporting and locking devices are to be measured, where indicated in the OMM.

2.6 Sealing arrangement

An examination of packing material / rubber gaskets and retaining bars or channels, including welding is to be carried out.

2.7 Drainage arrangement

An examination of drainage arrangement, including bilge wells and drain pipes is to be carried out, where fitted. A test of the bilge system between the inner and outer doors is to be carried out.

2.8 Function test of doors

Checking of the satisfactory operation of the bow, inner, side shell and stern doors during a complete opening and closing operation is to be made, as applicable, including:

1) Proper working of the hinging arms and hinges;
2) Proper engagement of the thrust bearings;
3) Device for locking the door in the open position;
4) Securing, supporting and locking devices;
5) Proper sequence of the interlock system for the opening / closing system and the securing and locking devices;
6) Mechanical lock of the securing devices;
7) Proper locking of hydraulic securing devices in the event of a loss of the hydraulic fluid, according to the procedure provided by the OMM;
8) Correct indication of open / closed position of doors and securing / locking devices at navigation bridge and other control stations;
9) Isolation of the hydraulic securing / locking devices from other hydraulic systems;
10) Confirmation that the operating panels are inaccessible to unauthorized persons;
11) Verification that a notice plate giving instructions to the effect that all securing devices are to be closed and locked before leaving harbour is placed at each operating panel and supplemented by warning indicator lights;
12) Examination of electrical equipment for opening, closing and securing the doors.

2.9 Function test of the indicator system

Checking of the satisfactory operation of the indicator system, where fitted, is to be carried out, as applicable, including:

1) Proper visible indication and audible alarm on the navigation bridge panel, according to the selected function ”harbour / sea voyage” and on the operating panel;
2) Lamp test function on both panels;
3) Verification that it is not possible to turn off the indicator light on both panels;
4) Verification of failsafe performance, according to the procedure provided by the OMM;
5) Confirmation that power supply for indicator system is supplied by the emergency source or other secure power supply and independent of the power supply for operating the doors;
6) Proper condition of sensors and protection from water, ice formation and mechanical damage.

2.10 Test of water leakage detection system

Where fitted, the water leakage detection system is to be tested including proper audible alarm on the navigation bridge panel and on the engine control room panel, according to the procedure provided by the OMM.

2.11 Test of television surveillance system

Where fitted, the television surveillance system is to be tested including proper indication on the navigation bridge monitor and on the engine control room monitor.

2.12 Tightness test

A hose test or equivalent is to be carried out. If the visual examination and function test have shown satisfactory results, the tightness test of shell doors on Ro-Ro cargo ships need not be carried out unless considered necessary by the attending surveyor.

2.13 NDT and Thickness Measurements

When considered necessary by the surveyor, NDT and thickness measurements may be required after visual examination and function test.

3. Renewal Surveys

3.1 The Class Renewal Survey is to include, in addition to the requirements of the Annual Survey as required in 2.1, examination, tests and checks of sufficient extent to verify that the bow, inner, side shell and stern doors, are in satisfactory condition and considered able to remain in compliance with applicable requirements, subject to proper maintenance and operation in accordance with the Operation and Maintenance Manual (OMM) or manufacturer's recommendations and the periodical surveys being carried out at the due dates for the five year period until the next Renewal Survey.

3.2 The examinations of the doors are to be supplemented by thickness measurements and testing to verify compliance with applicable requirements so that the structural and weathertight integrity remain effective. The aim of the examination is to identify corrosion, significant deformation, fractures, damages or other structural deterioration, that may be present.

3.3 The bow, inner, side shell and stern doors are to be surveyed as follows:

3.3.1 A survey of the items listed in 2.4, including close-up survey of securing, supporting and locking devices, together with welding, is to be carried out, refer to Table 4-II.7.

3.3.2 Non-destructive testing and thickness measurements are to be carried out on securing, supporting and locking devices, including welding, to the extent considered necessary by the surveyor. Whenever a crack is found, an examination with NDT is to be carried out in the surrounding area and for similar items as considered necessary by the surveyor.

3.3.3 The maximum thickness diminution of hinging arms, securing, supporting and locking devices is to be treated according to the BKI normal procedure for primary structures, but is not to be more than 15% of the as-built thickness or the maximum corrosion allowance of BKI, whichever is less. Certain designs may be subject to BKI's special consideration.

3.3.4 Checking the effectiveness of sealing arrangements by hose testing or equivalent is to be carried out.

3.3.5 Clearances of hinges, bearings and thrust bearings are to be taken. Unless otherwise specified in the OMM or by manufacturer's recommendation, the measurement of clearances on Ro-Ro cargo ships may be limited to representative bearings where dismantling is needed in order to measure the clearances.

If dismantling is carried out, a visual examination of hinge pins and bearings together with NDT of the hinge pin is to be carried out.

3.3.6 The non-return valves of the drainage system are to be dismantled and examined.

The following is a list of the devices and fittings and associated welding to be subject to close-up survey by the attending Surveyor.

Table 4-II.7 Minimum Requirements for Close-Up Surveys of Doors, Locking, Securing and Supporting Devices and Fittings

Cylinder securing pins, supporting brackets, back-up brackets (where fitted) and their welded connections;
Hinge pins, supporting brackets, back-up brackets (where fitted) and their welded connections;
Locking Hooks, securing pins, supporting brackets, back-up brackets (where fitted) and their welded connections;
Locking pins, supporting brackets, back-up brackets (where fitted) and their welded connections;
Locating and stopper devices and their welded connections.

D. Livestock Carrier

1. General remarks. Kind of surveys.

1.1 The following arrangements relate to livestock carriers as defined in the Guidelines for Livestock Carriers (Pt.7, Vol.4).

1.2 Unless otherwise stipulated in the following, the requirements in Section 3 apply.

2. Annual survey

2.1 The survey is to include a general examination of:

— spaces for the livestock and related hatch covers (to be surveyed according to Section 3, B.1.1.

— ventilation means, including prime movers

— main, emergency and portable lighting systems in live-stock spaces, passageways and access routes

— the drainage system

— fodder and fresh water system.

3. Class renewal survey

3.1 The equipment related to ventilation, lighting and the related power supply is to be surveyed to the same extent as required for similar equipment at the class renewal survey as indicated in Section 3, B.1.3.

3.2 The drainage, fodder and fresh water systems, including piping and pumps, are to be surveyed to the same extent as required for similar equipment at the class renewal survey as indicated in Section 3, B.1.3.

The fresh water tanks are to be internally examined in accordance with the periodicity given in Table 3.3.

Section 5 Retrospective Requirements for Existing Ships

A. General requirements 5-1
B. Construction – structure, subdivision and stability, machinery and electrical installations 5-1
C. Construction –Fire protection, fire detection and fire extinction 5-3
D. Additional safety measures for bulk carriers 5-5
E. Strength and securing of small hatches on the exposed fore deck and air pipes, ventilator pipes and their closing devices thereover 5-9
F. Loading instruments 5-10
G. Requirements for the fitting of side shell doors, stern doors, bow doors and inner doors of ro-ro passenger ships 5-10
H. Watertightness of chain lockers 5-12
I. Ice class draught mark of ships intended for navigation in ice 5-12
J. Requirements for electrical distribution system including harmonic filters 5-12

A. General requirements

1. This Section contains class-related retrospective requirements of SOLAS Convention and/or IACS URs for the existing self-propelled ships engaged on international voyages.

B. Construction – structure, subdivision and stability, machinery and electrical installations

1. Safe access to tanker bows as SOLAS 1996-1998 Chapter II-1 Reg. 3-3

1) Application:

   A) every tanker constructed on or after 1 July 1998;

   B) for tankers constructed before 1 July 1998, such means of access are to be provided at the first scheduled dry-docking after 1 July 1998, but not later than 1 July 2001.

2) Technical requirements: see Rules for Hull (Pt.1, Vol.II) Sec.21, O.

3) For Interpretation to this requirement to Guidance for Code and Convention Interpretation (Pt.1, Vol.Y) Sec.11 SC 138

2. Emergency towing arrangements on tankers as SOLAS 1999/2000 Chapter II-1 Reg. 3-4

1) Application:

   A) every tanker of not less than 20,000 tonnes deadweight constructed on or after 1 July 2002;

   B) for tankers of not less than 20,000 tonnes deadweight constructed before 1 July 2002, the design and construction of emergency towing arrangements are to be approved.

2) Technical requirements: see Rules for Hull (Pt.1, Vol.II) Sec.24, F.4.

3. Stability of ro-ro passenger ships in damaged condition as SOLAS 1996-1998 Chapter II-1 Reg.8

1) Application:

A) ro-ro passenger ships constructed on or after 1 January 2009 are to comply with Rules for Hull (Pt.1, Vol.II) Sec.36, C.;

B) ro-ro passenger ships constructed on or after 1 July 1997 and before 1 January 2009 are to comply with the November 1995 amendments, which were adopted by resolution 1 of the Conference of Contracting Governments to SOLAS, 1974 and amendments adopted by resolution MSC.47(66);

C) ro-ro passenger ships constructed before 1 July 1997 are to comply with the Rules not later than the date of the first periodical survey after the date of compliance prescribed in Table 5.1, according to the value of A/Amax.

Table 5-.1 Compliance Value A/Amax

Value of A/Amax	Compliance not later than
Less than 85%	1 October 1998
85% or more but less than 90%	1 October 2000
90% or more but less than 95%	1 October 2002
95% or more but less than 97.5%	1 October 2004
97.5% or more	1 October 2005

4. Special requirements for ro-ro passenger ships certified to carry 400 persons or more as SOLAS 1996-1998 Chapter II-1 Reg.8.3

1) Application: Notwithstanding the requirements of 2.:

A) ro-ro passenger ships constructed on or after 1 January 2009 are to comply with Rules for Hull (Pt.1, Vol.II) Sec.36;

B) ro-ro passenger ships certified to carry 400 persons or more constructed on or after 1 July 1997 and before 1 January 2009 are to comply with the November 1995 amendments, which were adopted by resolution 1 of the Conference of Contracting Governments to SOLAS, 1974 and amendments adopted by resolution MSC.47(66);

C) ro-ro passenger ships certified to carry 400 persons or more constructed before 1 July 1997 are to comply with the requirements of 2) of this paragraph not later than the date of the first periodical survey after the date of compliance prescribed in Table 5.2 and Table 5.3 or age of the ship [1)] equal to or greater than 20 years, whichever is the latest.

Table 5-.2 Compliance Value A/Amax for 400 persons or more

Value of A/Amax	Compliance not later than
Less than 85%	1 October 1998
85% or more but less than 90%	1 October 2000
90% or more but less than 95%	1 October 2002
95% or more but less than 97.5%	1 October 2004
97.5% or more	1 October 2010

[1)] The age of the ship means the time counted from the date on which the keel was laid or the date on which it was at a similar stage of construction or from the date on which the ship was converted to a ro-ro passenger ship.

Table 5-.3 Number of persons permitted to be carried

Number of persons permitted to be carried	Compliance not later than
1500 or more	1 October 2002
1000 or more but less than 1500	1 October 2006
600 or more but less than 1000	1 October 2008
400 or more but less than 600	1 October 2010

5. Construction and initial tests of watertight decks, trunks, etc., in ro-ro passenger ships

1) Ro-ro passenger ships constructed before 1 July 1997 are to comply with the requirements of the Rules not later than the date of the first periodical survey after 1 July 1997.

2) Technical requirements: see Rules for Hull (Pt.1, Vol.II) Sec.11 and as applicable requirement in Annex A.6.

6. Watertight integrity of the ro-ro deck (bulkhead deck) and below the ro-ro deck

1) Application:

A) ro-ro passenger ships constructed on or after 1 July 1997;

B) ro-ro passenger ships constructed before 1 July 1997 are to comply with the requirements of the Rules not later than the date of the first periodical survey after 1 July 1997.

2) Technical requirements: see Rules for Hull (Pt.1, Vol.II) Sec.11 and as applicable requirement in Annex A.6.

7. Integrity of the hull and superstructure, damage prevention and control

Application:

All ro-ro passenger ships constructed before 1 January 2009 are to comply with regulation 23-2 of the November 1995 amendments, which were adopted by resolution 1 of the Conference of Contracting Governments to SOLAS, 1974, but ro-ro passenger ships constructed before 1 July 1997 are to comply with paragraph 2 of regulation 23-2 of the above-mentioned amendments not later than the date of the first periodical survey after 1 July 1997.

8. Supplementary emergency lighting for ro-ro passenger ships

1) Application:

All ro-ro passenger ships, except that for ships constructed before 22 October 1989, this requirement is to apply not later than 22 October 1990.

2) Technical requirements: see Rules for Electrical Installations Pt.1, Vol.IV) Sec.16, F.

C. Construction –Fire protection, fire detection and fire extinction

1. Protection of cargo pump-rooms in tankers

1) Application:

All tankers constructed before 1 July 2002 are to be fitted with the devices and a system for continuous monitoring of the concentration of hydrocarbon gases as required, at the first scheduled dry-docking after 1 July 2002, but not later than 1 July 2005.

2) Technical requirements: see Rules for Machinery Installations (Pt.1, Vol.III) Sec.15, B.1 (SOLAS Reg. II-2/4.5.10.1.1 and 4.5.10.1.4).

2. Carriage of emergency escape breathing devices

1) Application: All ships constructed before 1 July 2002 are to carry the required emergency escape breathing devices not later than the date of the first survey after 1 July 2002.

2) Technical requirements: see Rules for Machinery Installations (Pt.1, Vol.III) Annex B, G.4 (SOLAS Reg. II-2/13.3.4.2 to 13.3.4.5 and 13.4.3).

3. Part E, Operational requirements of SOLAS II-2

1) Application: All ships constructed before 1 July 2002 are to comply with the relevant requirements not later than the date of the first survey after 1 July 2002.

2) Technical requirements: see Rules for Machinery Installations (Pt.1, Vol.III) Sec.15 (relevant requirements of SOLAS II-2/Part E, excluding Reg. 16.3.2.2 and 16.3.2.3).

4. Fire-extinguishing systems using Halon 1211, 1301, and 2402 and perfluorocarbons

1) Application: New installation of such systems is prohibited for all ships constructed before 1 July 2002.

2) Technical requirements: see Rules for Machinery Installations (Pt.1, Vol.III) Sec.12 (SOLAS Reg. II-2/10.4.1.3).

5. Deep-fat cooking equipment

1) Application: New installation of such equipment or replacement of the existing equipment with such equipment for all ships constructed before 1 July 2002 is to comply with the relevant requirements.

2) Technical requirements: see Rules for Machinery Installations (Pt.1, Vol.III) Sec.12, N.3 (SOLAS Reg. II-2/10.6.4).

6. Fixed water-based local application fire-extinguishing system

1) Application: Passenger ships and ro-ro passenger ships of 2000 gross tonnage and above constructed before 1 July 2002 are to be fitted with the required fixed water-based local application fire-extinguishing system not later than 1 October 2005.

2) Technical requirements: see Rules for Machinery Installations (Pt.1, Vol.III) Sec.12, L.3 (SOLAS Reg. II-2/10.5.6).

7. Diesel engines: High-pressure fuel delivery lines protected with a jacketed piping system, surfaces with temperatures above 220^0 C and isolation of fuel piping

1) Application: All ships (ships to which the Rules apply, the same below) constructed on or after 1 February 1992 but before 1 July 1998 are to comply with the relevant requirements not later than 1 July 2003. However, an appropriate cover of the fuel injection pump serving more than one nozzles, in engines having a power output of 375 kW or below, may replace the required jacketed protection system.

2) Technical requirements: see Rules for Machinery Installations (Pt.1, Vol.III) Sec.12, B.6.4 (SOLAS Reg. II- 2/4.2.2.5.2, 4.2.2.5.3 and 4.2.2.6.1).

8. Secondary means for pressure/vacuum relief in cargo tanks

1) Application: All tankers constructed before 1 July 1998 are to comply with the relevant requirements before the date of the first scheduled dry-docking after 1 July 1998, but not later than 1 July 2001.

2) Technical requirements: see Rules for Hull Pt.1, Vol.II) Sec.22, A (SOLAS Reg. II-2/11.6.3.2 and 4.5.3.2.3).

9. Additional requirements for means of escape of ro-ro passenger ships

1) Application: Ro-ro passenger ships constructed before 1 July 1997 are to comply with the relevant requirements at the date of the first periodical survey after 1 July 1997.

2) Technical requirements: see Rules for Hull Pt.1, Vol.II) Sec.22, A (SOLAS Reg. II-2/13.7).

10. Inert gas systems

1) Application: All tankers constructed before 1 September 1984:

   A) Tankers of 20000 tonnes deadweight and upwards and carrying crude oil are to be fitted with a required inert gas system:

      a) for tankers of 70000 tonnes deadweight and upwards, not later than 1 September 1984 or the date of delivery of the ship, whichever comes later;

      b) for tankers of less than 70000 tonnes deadweight, not later than 1 May 1985 or the date of delivery of the ship, whichever comes later. However, tankers of less than 40000 tonnes deadweight, which are not fitted with oil tank washing machines having an individual discharge capacity of more than 60 m^3/h, may not be fitted with the inert gas system.

   B) Tankers of 40000 tonnes deadweight and upwards and carrying oils other than crude oil as well as tankers of 20000 tonnes deadweight and upwards and carrying oils other than crude oil, both of which are fitted with oil tank washing machines having an individual discharge capacity of more than 60 m^3/h, are to be fitted with the required inert gas system:

      a) for tankers of 70000 tonnes deadweight and upwards, not later than 1 September 1984 or the date of delivery of the ship, whichever comes later;

      b) for tankers of less than 70000 tonnes deadweight, not later than 1 May 1985 or the date of delivery of the ship, whichever comes later.

2) Technical requirements: see Rules for Machinery Installations (Pt.1, Vol.III) Sec. 11, O.1.6.4.1.7 (Chapter 15 of the International Code for Fire Safety Systems (FSS Code)).

D. Additional safety measures for bulk carriers

1. Evaluation of scantlings of the transverse watertight corrugated bulkhead between cargo holds Nos.1 and 2, with cargo hold No.1 flooded, for existing bulk carriers

1) These requirements apply to all bulk carriers of 150 m in length and above, in the foremost hold, intending to carry solid bulk cargoes having a density of 1,78 t/m^3 or above, with single deck, topside tanks and hopper tanks, fitted with vertically corrugated transverse watertight bulkheads between cargo holds Nos.1 and 2 where:

   A) the foremost hold is bounded by the side shell only for ships which were contracted for construction prior to 1 July 1998, and have not been constructed in compliance with IACS Unified Requirement S18; or

   B) the foremost hold is double side skin construction of less than 760 mm breadth measured perpendicular to the side shell in ships, the keels of which were laid, or which were at a similar stage of construction, before 1 July 1999 and have not been constructed in compliance with IACS Unified Requirement S18 (Rev.2, Sept. 2000).

2) Technical requirements: see Rules for Hull (Pt.1, Vol.II) Sec.23, J

2. Evaluation of Allowable Hold Loading of cargo hold No.1 with cargo hold No.1 flooded, for existing bulk carriers

1) Application: All bulk carriers of 150 m in length and above, in the foremost hold, intending to carry solid bulk cargoes having a density of 1,78 t/m3 or above, with single deck, topside tanks and hopper tanks, where:

A) the foremost hold is bounded by the side shell only for ships which were contracted for construction prior to 1 July 1998, and have not been constructed in compliance with IACS Unified Requirement S20; or

B) the foremost hold is double side skin construction of less than 760 mm breadth measured perpendicular to the side shell in ships, the keels of which were laid, or which were at a similar stage of construction, before 1 July 1999 and have not been constructed in compliance with IACS Unified Requirement S20.

Early completion of a Renewal survey coming due after 1 July 1998 to postpone compliance is not allowed.

2) Technical requirements: see Rules for Hull (Pt.1, Vol.II) Sec.23, E

3. Implementation of IACS Unified Requirements S19 and S22 for existing single side skin bulk carriers

1) Application:

A) The requirements for the corrugated bulkhead between cargo holds Nos.1 and 2 in Rules for Hull (Pt.1, Vol.II) Sec.23, E and the requirements for strengthening of double bottom structure of No.1 hold in Rules for Hull (Pt.1, Vol.II) Sec.23, K are to be applied in conjunction with the damage stability requirements set forth in this paragraph for withstanding flooding of the foremost cargo hold. The schedule for compliance is given in Rules for Hull (Pt.1, Vol.II) Sec.23, J and K

2) Technical requirements: see Section 4, I.E.1.2.2

Table 5-.4 Age of ship

No.	Age of ship	Schedule for compliance
1	20 years or more on 1 July 1998	Due date of the first intermediate survey, or due date of the first Renewal survey to be held after 1 July 1998, whichever comes first
2	15 years or more but less than 20 years on 1 July 1998	Due date of the first Renewal survey to be held after 1 July 1998, but not later than 1 July 2002
3	10 years or more but less than 15 years on 1 July 1998	Due date of the first intermediate survey or Renewal survey to be held after the date on which the ship reaches 15 years of age but not later than the date on which the ship reaches 17 years of age
4	5 years or more but less than 10 years on 1 July 1998	Due date, after 1 July 2003, of the first intermediate or the first Renewal survey after the date on which the ship reaches 10 years of age, whichever occurs first
5	Less than 5 years on 1 July 1998	The date on which the ship reaches 10 years of age

Note:
For the ships listed under No.4 of Table 5.4, attention is to be paid to the following:

1. *Where the due date of the intermediate or Renewal survey is after 1 July 2003 (the due date of the intermediate survey means the third anniversary date of the annual survey) and the intermediate or Renewal survey is completed before 1 July 2003, the evaluation required by 1., 2. and 3. is not allowed to be postponed, i.e. it is to be completed within 3 months after the due date of this intermediate survey or by the due date of the Renewal survey.*

2. *Where the due date of the intermediate survey is before 1 July 2003 and the intermediate survey is completed before 1 July 2003, this intermediate survey may be accepted, i.e. the evaluation required by 1., 2. and 3. may be performed at the first Renewal survey after 1 July 2003.*

4. Cargo hatch cover securing arrangements for bulk carriers

1) Application: All bulk carriers which were not built in accordance with Rules for Hull (Pt.1, Vol.II) Sec.17, B.

2) Schedule for compliance: The ships to which A) applies are to comply with C) in accordance with the following schedule:

   A) for ships which are 15 years of age or more on 1 January 2004 by the due date of the first intermediate or Renewal survey after that date;

   B) for ships which are 10 years of age or more on 1 January 2004 by the due date of the first Renewal survey after that date;

   C) for ships which are less than 10 years of age on 1 January 2004 by the date on which the ship reaches 10 years of age.

   Completion prior to 1 January 2004 of an intermediate or Renewal survey with a due date after 1 January 2004 cannot be used to postpone compliance. However, completion prior to 1 January 2004 of an intermediate survey the window for which straddles 1 January 2004 can be accepted.

3) Technical requirements: Hatch cover securing devices and stoppers for cargo hold hatchways No.1 and No.2 which are wholly or partially within 0,25 L of the fore perpendicular (except pontoon type hatch covers) are to comply with Rules for Hull (Pt.1, Vol.II) Sec.17, B.5.6 and 5.7.

5. Renewal criteria for side shell frames and brackets in single side skin bulk carriers and single side skin OBO carriers

1) Application:

   A) The requirements apply to the side shell frames and brackets of cargo holds bounded by the single side shell of bulk carriers which were not built in accordance with IACS UR S12[2)] Rev. 1 or subsequent revisions.

   B) The requirements also apply to the side shell frames and brackets of cargo holds bounded by the single side shell of Oil/Bulk/Ore (OBO) carriers of single side skin construction.

2) Schedule for compliance:

   A) Bulk carriers are to be assessed for compliance with the requirements and steel renewal, reinforcement or coating, where required, is to be carried out in accordance with the following schedule and at subsequent intermediate and Renewal surveys:

      a) for bulk carriers which are 15 years of age or more on 1 January 2004 by the due date of the first intermediate or Renewal survey after that date;

      b) for bulk carriers which are 10 years of age or more on 1 January 2004 by the due date of the first Renewal survey after that date;

[2)] IACS UR S12 - Side Structures in Single Side Skin Bulk Carriers.

c) for bulk carriers which are less than 10 years of age on 1 January 2004 by the date on which the ship reaches 10 years of age.

Completion prior to 1 January 2004 of an intermediate or Renewal survey with a due date after 1 January 2004 cannot be used to postpone compliance. However, completion prior to 1 January 2004 of an intermediate survey the window[3)] for which straddles 1 January 2004 can be accepted.

B) OBO carriers are to be assessed for compliance with the requirements and steel renewal, reinforcement or coating, where required, is to be carried out in accordance with the following schedule and at subsequent intermediate and Renewal surveys:

a) for OBO carriers which are 15 years of age or more on 1 July 2005 by the due date of the first intermediate or Renewal survey after that date;

b) for OBO carriers which are 10 years of age or more on 1 July 2005 by the due date of the first Renewal survey after that date;

c) for OBO carriers which are less than 10 years of age on 1 July 2005 by the date on which the ship reaches 10 years of age.

Completion prior to 1 July 2005 of an intermediate or Renewal survey with a due date after 1 July 2005 cannot be used to postpone compliance. However, completion prior to 1 July 2005 of an intermediate survey the window for which straddles 1 July 2005 can be accepted.

3) The evaluation criteria are given in Annex B.11

6. Survey of the cargo hold structure of bulk carriers

Bulk carriers constructed before 1 July 1999, of 150 m in length and upwards of single side skin construction, of 10 years of age and over, are not to carry solid bulk cargoes having a density of 1,78 t/m^3 and above unless it has satisfactorily undergone either:

1) a periodical survey in accordance with the enhanced programme of inspections required by SOLAS regulation XI-1/2; or

2) a survey of all cargo holds to the same extent as required for periodical surveys in the enhanced survey programme of inspections required by regulation XI-1/2.

7. Requirements for the fitting of a forecastle

1) Application: All bulk carriers (including ore carriers and combination carriers) which are contracted for construction on or after 1 January 2004, as defined in Section 4.I.E and F.

2) Technical requirements: Rules for Hull (Pt.1, Vol.II) Sec.23.G is to be complied with.

8. Hold, ballast and dry space water level detectors

1) Application: All bulk carriers of 500 gross tonnage and upwards and engaged on international voyages.

2) Schedule for compliance:

A) bulk carriers constructed on or after 1 July 2004 are to comply with the requirements of this paragraph on the date of being commissioned;

B) the water level alarm of bulk carriers constructed before 1 July 2004 is to comply with the requirements of this paragraph not later than the date of the annual, intermediate or Renewal survey of the ship to be carried out after 1 July 2004, whichever comes first.

3) Technical requirements: see Rules for Electrical Installations (Pt.1, Vol.IV) Sec.18.

[3)] Windows means the time span allowed for completing a specific type of survey.

9. Availability of pumping systems

1) Application: Bulk carriers.

2) Schedule for compliance: Bulk carriers constructed before 1 July 2004 are to comply with the requirements of this paragraph not later than the date of the first intermediate or Renewal survey of the ship to be carried out after 1 July 2004, but in no case later than 1 July 2007.

3) Technical requirements: see Rules for Machinery Installations (Pt.1, Vol.III) Sec.11 ,M.4.13 and Rules for Electrical Installations (Pt.1, Vol.IV) Sec.18.

10. Restriction on sailing with any cargo hold being empty

Bulk carriers of 150 m in length and upwards of single side skin construction, designed to carry cargoes having a density of 1.78 t/m^3 and above, where they comply neither with the requirement of SOLAS Reg. XII/5.1 for having sufficient strength to withstand flooding of any one cargo hold nor with resolution MSC.168(79) Standards and Criteria for Side Structures of Bulk Carriers of Single-Side Skin Construction, are not allowed to sail after the date of reaching 10 years of age if any cargo hold is loaded below 10% of the maximum permissible loading of that hold in the full load condition. For the purpose of this paragraph, the full load condition means that the ship is loaded to not less than 90% of its deadweight in relation to the freeboard assigned.

E. Strength and securing of small hatches on the exposed fore deck and air pipes, ventilator pipes and their closing devices thereover

1. Application

1) General dry cargo ships (excluding container ships, vehicle carriers, ro-ro ships and woodchip carriers), ore carriers, combination carriers (e.g. oil/bulk/ore carriers, ore/oil carriers) and bulk carriers that are contracted for construction prior to 1 January 2004, of 100 m in length or more.

2. Schedule for compliance:

1) The requirements of 3. are to be complied with in accordance with the following schedule:

   A) for ships which are 15 years of age or more on 1 January 2004 by the due date of the first intermediate or Renewal survey after that date;

   B) for ships which are 10 years of age or more on 1 January 2004 by the due date of the first Renewal survey after that date;

   C) for ships which are less than 10 years of age on 1 January 2004 by the date on which the ship reaches 10 years of age.

   Completion prior to 1 January 2004 of an intermediate or Renewal survey with a due date after 1 January 2004 cannot be used to postpone compliance. However, completion prior to 1 January 2004 of an intermediate survey the window for which straddles 1 January 2004 can be accepted.

2) Ships (on the exposed deck over the forward 0,25L, applicable to all ship types of sea-going service of 80 m in length or more, where the height of the exposed deck in way of the hatch is less than 0,1L or 22 m above the summer load waterline, whichever is the lesser) that are contracted for construction on or after 1 January 2004 are to comply by the time of delivery.

3. Technical requirements

1) The strength and securing of the small hatches on the exposed deck giving access to spaces forward of the collision bulkhead (and to spaces which extend over this line aft-wards) is to comply with Rules for Hull (Pt.1, Vol.II) Sec.17, D.2.

2) Air pipes, ventilator pipes and their closing devices in way of the locations referred to in A) above are to comply with Rules for Hull (Pt.1, Vol.II) Sec.17, D.2.

F. Loading instruments

1. Loading instruments for strength calculation

1) Application:

   A) Type I ships of 100 m or over in length, as defined in Rules for Hull (Pt.1, Vol.II) Sec.5, A.4.

   B) Bulk carriers (including ore carriers and combination carriers) of 150 m or over in length, as defined in Rules for Hull (Pt.1, Vol.II) Sec.5, A.4.

2) Schedule for compliance:

   A) Bulk carriers (including ore carriers and combination carriers) of 150 m or over in length and contracted for construction before 1 July 1998 are to be fitted with loading instruments not later than the date of delivery or 1 January 1999, whichever is later.

   B) Ships contracted for construction on or after 1 July 1998 are to be fitted with loading instruments before the date of delivery.

3) Technical requirements: Rules for Hull (Pt.1, Vol.II) Sec.5, A.4. and Guidelines for Certification of Loading Computer System (Pt.4, Vol.1) are to be complied with.

2. Loading instruments for providing intact stability information

1) Application: All bulk carriers less than 150 m in length and constructed on or after 1 July 2006.

2) Technical requirements: Rules for Hull (Pt.1, Vol.II) Sec.23, B is to be complied with.

3. Onboard computers for stability calculations

1) Application: All ships contracted for construction on or after 1 July 2005 and fitted with computers for stability calculations.

2) Technical requirements: Guidelines for Certification of Loading Computer System (Pt.4, Vol.1) Sec. 1 is to be complied with.

G. Requirements for the fitting of side shell doors, stern doors, bow doors and inner doors of ro-ro passenger ships

1. Side shell doors and stern doors

1) Application: All existing ro-ro passenger ships with the date of building before 30 June 1996:

   A) The structural condition of side shell doors and stern doors, especially the primary structure, the securing and supporting arrangements and the hull structure alongside and above the doors, are to be specially examined and any defects rectified.

2) The following measures are to be complied with by all existing ro-ro passenger ships with the date of building before 30 June 1996:

   A) The structural arrangement of securing devices and supporting devices of inwards opening doors in way of these securing devices and, where applicable, of the surrounding hull structure is to be reassessed in accordance with the applicable requirements of Rules for Hull (Pt.1, Vol.II) Sec.6, H.2.1 and modified accordingly.

B) The securing and locking arrangements for side shell doors and stern doors which may lead to the flooding of a special category space or ro-ro space as defined in Rules for Hull (Pt.1, Vol.II) Sec.6, H.1.3 are to comply with the following requirements:

a) separate indicator lights and audible alarms are to be provided on the navigation bridge and on each operating panel to indicate that the doors are closed and that their securing and locking devices are properly positioned;

b) the indication panel is to be provided with a lamp test function. It is not to be possible to turn off the indicator light;

c) the indication panel on the navigation bridge is to be equipped with a mode selection function "harbour/sea voyage", so arranged that audible alarm is given if the ship leaves harbour with side shell or stern doors not closed or with any of the securing devices not in the correct position;

d) a water leakage detection system with audible alarm and television surveillance is to be arranged to provide an indication to the navigation bridge and to the engine control room of any leakage through the doors.

C) Documented operating procedures for closing and securing side shell and stern doors are to be kepton board and posted at the appropriate places.

2. Bow doors and inner doors

1) Application: All existing ro-ro passenger ships with the date of building before 30 June 1996. Technical requirements are as follows:

A) The structural condition of bow doors and inner doors, especially the primary structure, the securing and supporting arrangements and the hull structure alongside and above the doors, are to be specially examined and any defects rectified.

B) The requirements of Rules for Hull (Pt.1, Vol.II) Sec.6, H.8 concerning operating procedures of the bow door and inner door are to be complied with.

2) The following measures are to be complied with by all existing ro-ro passenger ships with the date of building before 30 June 1996:

A) The location and arrangement of inner doors are to comply with Rules for Hull (Pt.1, Vol.II) Sec.6, H.1.2.4.

B) Ships with visor door are to comply with Rules for Hull (Pt.1, Vol.II) Sec.6, H.3.1.3 requiring redundant provision of securing devices preventing the upward opening of the bow door. In addition, where the visor door is not self-closing under external loads (i.e. the closing moment My calculated in accordance with Rules for Hull (Pt.1, Vol.II) Sec.6, H.6.2.7 is less than zero) then the opening moment Mo is not to be taken less than -My. If drainage arrangements in the space between the inner and bow doors are not fitted, the value of Mo is to be specially considered. Where available space above the tank top does not enable the full application of Rules for Hull (Pt.1, Vol.II) Sec.6, H.3.1.3 equivalent measures are to be taken to ensure that the door has positive means for being kept closed during seagoing operation.

C) Ships with visor door are to comply with Rules for Hull (Pt.1, Vol.II) Sec.6, H.6.2.8 requiring securing and supporting devices excluding hinges to be capable of bearing the vertical design force (Fz – 10W) without exceeding the permissible stresses given in with visor door are to comply with Rules for Hull (Pt.1, Vol.II) Sec.6, H.4.3.3

D) For side-opening doors, the structural arrangements for supporting vertical loads, including securing devices, supporting devices and, where applicable, hull structure above the door, are to be re-assessed in accordance with the applicable requirements of Rules for Hull (Pt.1, Vol.II) Sec.6, H.6 and modified accordingly. The securing and locking arrangements for bow doors and inner doors which may lead to the flooding of a special category space or ro-ro space as defined in the Rules for Hull (Pt.1, Vol.II) Sec.6, H.6.1.3 are to comply with the following requirements:

a) separate indicator lights and audible alarms are to be provided on the navigation bridge and on each operating panel to indicate that the doors are closed and that their securing and locking devices are properly positioned;

b) the indication panel is to be provided with a lamp test function. It is not to be possible to turn off the indicator light;

c) the indication panel on the navigation bridge is to be equipped with a mode selection function "harbour/sea voyage", so arranged that audible alarm is given if the ship leaves harbour with bow doors or inner doors not closed or with any of the securing devices not in the correct position;

d) a water leakage detection system with audible alarm and television surveillance is to be arranged to provide an indication to the navigation bridge and to the engine control room of any leakage through the doors.

H. Watertightness of chain lockers

1) Application: Ships of 24 m or over in length, the keels of which are laid or which are at a similar stage of construction on or after 1 July 2003.

2) Technical requirements: Rules for Hull (Pt.1, Vol.II) Sec.18, E is to be complied with.

I. Ice class draught mark of ships intended for navigation in ice

1. Marking of warning triangle and ice class draught

1) Application: Ships having class notations of Ice Class B1* to B3.

2) Schedule for compliance:

A) Ships constructed on or after 1 July 2007, of which the summer load line in fresh water is located at a higher level than the upper ice waterline (UIWL), are to comply with the requirements of this paragraph before the date of delivery.

B) Ships constructed before 1 July 2007, of which the summer load line in fresh water is located below the upper ice waterline (UIWL), are to comply with the requirements of this paragraph not later than the first scheduled dry docking after 1 July 2007.

3) Technical requirements: The ship's sides are to be provided with a warning triangle and with an ice class draught mark at the maximum permissible ice class draught amidships, in accordance with Rules for Hull (Pt.1, Vol.II) Sec.15.

2. Documentation and certification requirements regarding ice class draught

1) Application: Ships having class notations of Ice Class B1* to B3.

2) Schedule for compliance: The requirements of this paragraph are to be complied with not later than 1 July 2007 or the date of subsequent renewal of the classification certificate.

3) Technical requirements: Rules for Hull (Pt.1, Vol.II) Sec.15.

J. Requirements for electrical distribution system including harmonic filters

1. Application: for ships contracted for construction before 1 July 2017, the electrical distribution system of which includes harmonic filters. However, harmonic filters installed for single application frequency drives such as pump motors may be excluded from these requirements.

2. Schedule for compliance: for ships to which 1., the due date of the first periodical survey on or after 1 July 2017.

3. Technical requirements: as a minimum, harmonic distortion levels of main busbar on board such existing ships are to be measured annually under seagoing conditions as close to the periodical machinery survey as possible so as to give a clear representation of the condition of the entire plant to the surveyor.

Harmonic distortion readings are to be carried out when the greatest amount of distortion is indicated by the measuring equipment. An entry showing which equipment was running and/or filters in service is to be recorded in the log so this can be replicated for the next periodical survey. Harmonic distortion levels are also to be measured following any modification to the ship's electrical distribution system or associated consumers by suitably trained ship's personnel or from a qualified outside source. Records of all the above measurements are to be made available to the surveyor at each periodical survey.

This page intentionally left blank

Annex A Annexes to Section 1-3

A.1 Procedures for Confined Space Safe Entry . . . A-1
A. General . . . A-1
B. Definitions . . . A-2
C. Requirements . . . A-4
A.2 Hull Survey for New Construction . . . A-7
A. Scope . . . A-7
B. Definitions . . . A-7
C. Applications . . . A-8
D. Qualification and monitoring of personnel . . . A-8
E. Survey of the hull structure . . . A-8
F. Review of the construction facility . . . A-9
G. New building survey planning . . . A-9
H. Examination and test plan for newbuilding activities . . . A-11
I. Proof of the consistency of surveys . . . A-11
J. Ship Construction File . . . A-11
K. Requirements for Tankers and Bulk Carriers subject to SOLAS Chapter II-1 Part A-1 Regulation 3-10 (Goal-based ship construction standards for bulk carriers and oil tankers) . . . A-12
A.3 The Wastage Allowance . . . A-34
A.4 Class Requirements of Laid-Up Ships . . . A-36
A. General . . . A-36
B. Safety conditions . . . A-36
C. Preservation measures for lay-up and maintenance . . . A-37
A.5 Survey of Watertight Cable Transits . . . A-43
A. General . . . A-43
B. Cable Transit Seal Systems Register . . . A-43
C. Installation and Maintenance of Watertight Cable Transits . . . A-44
A.6 Testing Procedures of Watertight Compartments . . . A-45
A. General . . . A-45
B. SOLAS Ships (Ships Built in Compliance with SOLAS 1974 as Amended) . . . A-45
C. SOLAS Exempt/ Equivalent Ships . . . A-54
D. Non-SOLAS Ships . . . A-55
A.7 Definitions . . . A-57
A.8 List of Contact Points for Changing Classification Status . . . A-66

A.1 Procedures for Confined Space Safe Entry

A. General

This annex contains the minimum requirements to help and keep Surveyors safe when conducting confined space entry. BKI is free to take measures beyond those required in this Annex, but shall as a minimum prescribe the requirements contained in this Annex and that they meet any relevant occupational safety and health legislative requirements in place at locations where work is conducted.

Guidance for Marine Industry (Pt.1, Vol.AC) Sec.4.R-72 and IMO Res. A.1050(27) can be referred to for further guidance on confined space safe entry practice. When in any doubt about the safety associated

with the confined space, the attending surveyor has the right to refuse entry.

B. Definitions

1. Confined Space

Confined Space means a space that has any of the following characteristics:

— Limited openings for entry and exit

— Unfavourable natural ventilation

— Not intended for continuous worker occupancy

It may include, but is not limited to:

— boilers,

— pressure vessels,

— cargo spaces (cargo holds, or cargo tanks),

— enclosed cargo space access trunks ,

— ballast tanks,

— double bottoms,

— double hull spaces,

— fuel oil tanks,

— lube oil tanks,

— sewage-tanks,

— pump-rooms,

— compressor rooms,

— cofferdams,

— void spaces,

— duct keels,

— inter-barrier spaces,

— engine crankcases,

— excavations and pits.

2. Confined Space Entry (CSE)

Confined Space Entry is the process of entering, working in and exiting a confined space.

3. Competent Person

Competent person means a person with sufficient theoretical knowledge and practical experience to make an informed assessment of the likelihood of oxygen deficient/enriched or a dangerous atmosphere being present or subsequently arising in the space. Competent person must be trained and qualified in the hazards of Confined Spaces and in use of atmospheric monitoring devices. The Competent Person role may be performed by a Marine Chemist.

4. Responsible Person

Responsible Person means a person authorized to permit entry to a confined space and having sufficient knowledge of the procedure to be followed and other activities that are being undertaken that could impact on the safety of those in a confined space.

5. Attendant

Attendant is a person who is suitably trained and responsible for maintaining a watch over those entering the confined space, for maintaining communications with those inside the space and for initiating the emergency procedures in the event of an incident occurring.

6. Marine Chemist

A Marine Chemist is a person holding a valid and suitably recognized qualification as a marine chemist or equivalent.

7. Adjacent Space Connected Space

7.1 An adjacent space means a space that shares a common boundary with a compartment that contains a hazardous atmosphere. Such a space has no opening or connections into the hazardous compartment whatsoever and is a contiguous barrier. Such a space may only contain a hazardous atmosphere in the event of the failure of that barrier.

7.2 Connected space means a space that is connected, by either permanent or intermittent means to a source space that may contain a hazardous atmosphere. A space separated by a door shall be considered 'connected' as it is impossible to tell from outside the space whether it is open or not. A connected space shall be seen as containing a hazardous atmosphere until testing proves otherwise as that atmosphere could be trapped.

8. Hazardous Atmosphere:

A hazardous atmosphere in a confined spaces is an environment that may expose personnel to the risk of death, incapacitation, injury, acute illness, toxicity or an inability to self-rescue. This type of atmosphere can arise due to all or any combination of following conditions:

— Lack of natural air movement

— Oxygen-deficient environment

— Flammable environment including oxygen enrichment

— Toxic environment, and/or

— Any other hazardous atmospheric condition.

9. Surveyor

For the purpose of this Procedural Requirement a surveyor is any person employed by BKI conducting activities within a confined space on behalf of this BKI.

10. Permit to Enter/Permit to Work

A Permit to Enter or Permit to Work is a documented authorization that has been signed and dated, including time of issue by the Responsible Person, which states that the space has been tested by a Competent Person and that the space is safe for entry; what precautions, equipment etc. are required validity of the permit, and what works are to be done. The validity of the permit is not to exceed 8 hours.

C. Requirements

The requirements are categorised in three groups.

1. Training

1.1 All Surveyors who are expected to enter and work in confined spaces shall be trained in Occupational Safety and Health requirements for such activities. This training shall include:

— Recognizing a confined space.

— Role of the Competent Person, Responsible Person, Attendant and Marine Chemist.

— How to recognize the hazards and manage the risks associated with Confined Space Entries.

— Permit to Work (PTW) systems / control procedures at the workplace.

— Requirements for atmosphere testing and the interpretation of their results.

— Use of personal multi gas meters.

— Access, exit and safe working requirements.

— Emergency arrangements

1.2 Competency in the areas covered by the training identified in 1.1 shall be periodically assessed, either as part of activity monitoring or some other suitable means. The maximum period between these assessments of competency is 3 years. Appropriate refresher training shall be provided as determined necessary from the competency assessment. The delivery mechanism for this refresher training is for the individual societies to determine.

2. Confined Space Entry Procedure

2.1 The minimum requirements for Surveyors entry into a confined space are given as follows:

— Safe entry procedures (such as entry permit, “safe for workers” certificate, “safe for hot work” certificate, etc.) are in place, current and are being followed.

— The Responsible and Competent Persons are identified.

— The access and exit arrangements (including Permanent Means of Access) to and within the confined space are considered safe. Where available, multiple entry and exit ways shall be opened.

— Communications arrangements are adequate.

— The confined space is adequately clean to allow safe working.

— The confined space lighting is adequate for entry/exit and to allow safe working in a confined space.

— The atmosphere has been demonstrated as being safe (safe limits for entry are atmospheric oxygen the range of 20,6 % to 22% by volume [1)], combustible gases not more than 1% of lower flammable limit, toxics vapours and gases not more than 50% of the occupational exposure limits).

— Adequate ventilation arrangements are in place and functioning throughout the period the surveyors are inside the confined space.

[1)] OSHA Standard 1926.1202 stipulates, the minimum safe level of oxygen for humans in a confined space is 19,5% while maximum is 23,5% by volume and the alarms for Personal multi-gas meters shall be set within this range. The oxygen limits 20,6% to 22% are safe limits for ”ENTRY” inside a confined space by a surveyor. Though the personnel multi-gas meters are set at 19,5% and 23,5% the surveyor can refuse entry inside the confined space if he/she notes that the measured entry oxygen value indicated on the entry permit form is outside the range of 20,6% to 22% for enhancing the safety.

— Isolation of the confined space, as applicable, from other tanks, cargo spaces, pipes, etc. and of machinery in the space, is confirmed.

— Extreme temperature effects are adequately considered.

— Electrical equipment in the confined space is suitable and in acceptable condition.

— A dedicated Attendant is provided by the vessel's management or the management of the facility where the surveyor's activities are carried out for the complete duration of the time spent working in the confined space and the Attendant has suitable means of initiating emergency response.

— Adequate emergency response arrangements are in place and ensure that appropriate rescue equipment is made available at the entrance of the confined space. Understanding that rescue in a confined space can be time critical, if a confined space is such that rescue will be extremely difficult using available equipment, surveyors shall refuse entry until the risk can be mitigated to an acceptable level.

2.2 No surveyor shall be the first to enter a confined space, and they shall be accompanied at all times where the size of the space permits.

2.3 Surveyor shall not enter the confined space if they are required to wear breathing apparatus.

2.4 Surveyor shall not enter the confined space if the surrounding noise can adversely impact effective communication.

2.5 Surveyors shall not enter a confined space if other work, such as welding, blasting is being carried out.

2.6 Surveyors shall not enter cargo spaces that have cargoes that are oxygen depleting, self heating, or emitting toxic gases.

2.7 Surveyors shall not enter compartments that have been fumigated, or adjacent / connected compartments to those that have been fumigated, unless certified gas free by a marine chemist.

2.8 Special attention needs to be given to tanks that carry ballast water which has been treated with chemicals.

2.9 On ships fitted with ballast water treatment system using ozone generators, surveyors shall ensure following prior entry into ballast tanks:

— Ozone levels inside the tank must be checked (not to exceed 0,1 ppm (0,2 mg/m^3)).

— Confirm that the amount of residual water inside the ballast tank is no more than the normal stripping level.

Surveys of tanks by means of rafts or boats on such ships shall be permitted if an exchange of ballast water has been carried out and the ballast tank contains untreated water only.

2.10 Surveyor shall not enter the confined space if hazardous atmosphere is present or suspected in an adjacent space, and/or connected space until the following is carried out:

— A risk assessment is completed by the vessel's Management Company and the risk is mitigated.

— All identified controls are confirmed in place prior to confined space entry.

— The atmosphere in space connected to the space being entered, if any, is checked and deemed to be safe.

2.11 No surveyors shall not be part of a rescue team.

2.12 Surveyors shall immediately leave a confined space, by the nearest safe exit, if any alarms sound, or any physical impairment or distress is experienced by the surveyor.

2.13 Surveyors shall keep in mind and check the structural integrity of access and exit arrangements (including Permanent Means of Access) inside confined spaces, especially in ballast tanks and cargo holds. The surveyor shall refuse entry into any spaces with suspect/deficient access ladders etc. until the structural integrity has been found satisfactory.

2.14 The vessel's management or the management of the facility shall have established procedures for confined space entry.

2.15 If any of minimum requirements addressed in 2.1 through 2.14 are not complied with or in any other situation where the surveyor has a valid concern over the safety of the confined space, he/she shall refuse entry into the confined space.

2.16 The points addressed in 2.1 through 2.14 above shall be considered as part of survey planning and reviewed as changes occur during any Confined Space Entry.

3. Equipment for Surveyors Entering a Confined Space

3.1 The following minimum set of Personal Protective Equipment shall be made available by BKI to its Surveyors for conducting a Confined Space Entry:

— Protective clothing

— Safety shoes/boots

— Hard hat

— Work gloves

— Protective glasses and/or goggles

— Ear defenders and/or ear plugs

— An individual multi gas meter, in good working order, serviced and calibrated as per the manufacturer's instructions

— A flashlight, appropriate to the nature of the confined space to be entered, and in good working order

3.2 The Surveyors must always use the necessary personal protective equipment according to the specific conditions and the survey being carried out.

A.2 Hull Survey for New Construction

A. Scope

The scope of this Annex includes the following main activities:

1. Examination of the parts of the ship covered by classification rules and by applicable statutory regulations for hull construction, to obtain appropriate evidence that they have been built in compliance with the rules and regulations, taking account of the relevant approved drawings.

2. Appraisal of the manufacturing, construction, control and qualification procedures, including welding consumables, weld procedures, weld connections and assemblies, with indication of relevant approval tests.

3. Witnessing inspections and tests as required in the classification rules used for ship construction including materials, welding and assembling, specifying the items to be examined and/or tested and how (e.g. by hydrostatic, hose or leak testing, non destructive examination, verification of geometry) and by whom.

4. Appraisal of material and equipment used for ship construction and their inspection at works is not included in this Annex. Details of requirements for hull and machinery steel forgings and castings and for normal and higher strength hull structural steel are given in Rules for Materials (Pt.1, Vol.V), Sec. 6, 7 and 4, B respectively. Acceptance of these items is verified through the survey process carried out at the manufacturer's works and the issuing of the appropriate certificates.

5. In addition to above, for Tankers and Bulk Carriers subject to SOLAS Chapter II-1 Part A-1 Regulation 3-10 (Goal-based ship construction standards for bulk carriers and oil tankers), see also K.

B. Definitions[2)]

1. The hull structure is defined as follows:

— hull envelope including all internal and external structures;

— superstructures, deckhouses and casings;

— welded foundations, e.g. main engine seatings;

— hatch coamings, bulwarks;

— all penetrations fitted and welded into bulkheads, decks and shell;

— the fittings of all connections to decks, bulkheads and shell, such as air pipes and ship side valves

— all ILLC 1966, as amended, items;

— welded attachments to shell, decks and primary members, e.g. crane pedestals, bitts and bollards, but only as regards their interaction on the hull structure.

2. Reference to documents also includes electronic transmission or storage.

3. Definition of survey methods which the surveyor is directly involved in: **Patrol, Review, Witness**.

3.1 **Patrol**, the act of checking on an independent and unscheduled basis that the applicable processes, activities and associated documentation of the shipbuilding functions identified in Table A.2.1 continue to conform to classification and statutory requirements.

3.2 **Review**, the act of examining documents in order to determine traceability, identification and to confirm that processes continue to conform to classification and statutory requirements.

[2)] Terminology for hull terms and hull survey terms can be found in Guidance for Marine Industry (Pt.1, Vol.AC) Sec.5.R-82.

3.3 **Witness** is the attendance at scheduled inspections in accordance with the agreed Inspection and Test Plans to the extent necessary to check compliance with the survey requirements.

C. Applications

1. This Annex covers the survey of all new construction of steel ships intended for classification and for international voyages except for:

— those defined in SOLAS I/3;

— high speed craft as defined in I/1.3.1 of the 2000 High Speed Craft Code;

— Mobile Offshore Drilling Units as defined in I/1.2.1 of the MODU Code.

2. This Annex covers all statutory items, relevant to the hull structure and coating, i.e. Load Line and SOLAS Safety Construction.

3. This Annex does not cover the manufacture of equipment, fittings and appendages regardless whether they are made inside or outside of the shipyard, examples being as follows. Evidence of acceptance shall be provided by accompanying documentation from class surveyor at manufacturer and verified at the shipyard:

— hatch covers;

— doors and ramps integral with the shell and bulkheads;

— rudders and rudder stock;

— all forgings and castings integral to the hull.

4. This Annex applies to the installation into the ship, welding and testing of:

4.1 the items listed in 3. above;

4.2 equipment forming part of the watertight and weather tight integrity of the ship.

5. This Annex applies to the hull structures and coating constructed at any of the following:

5.1 shipbuilder's facilities;

5.2 sub-contractors at the shipbuilder's facilities;

5.3 sub-contractors at their own facilities or at other remote locations.

D. Qualification and monitoring of personnel

1. Exclusive surveyors of BKI are to confirm through patrol, review and witness as defined in B.3, that the ships are built using approved plans in accordance with the relevant rules and statutory requirements. The surveyors are to be qualified to be able to carry out the tasks.

2. BKI is to establish and implement relevant management procedures to ensure that the activities of the Surveyors are monitored.

E. Survey of the hull structure

1. Table A.2.1 provides a list of surveyable items for the hull structure and coating covered by this Annex, including:

1.1 description of the shipbuilding functions;

1.2 classification and statutory survey requirements;

1.3 survey method required for classification;

1.4 relevant IACS and statutory requirement references;

1.5 documentation to be available for the classification surveyor during construction.

1.5.1 The shipbuilder is to provide the classification surveyors access to documentation required by classification, this includes documentation retained by the shipbuilder or other third parties.

1.5.2 The list of documents approved or reviewed by BKI for the specific new construction are as follows:

— plans and supporting documents

— examination and testing plans

— NDE plans

— welding consumable details

— welding procedure specifications

— welding plan or details

— welder's qualification records

— NDE operator's qualification records

1.6 Documents to be inserted into the ship construction file. Refer to Sub-section J. for details.

1.7 A list of specific activities which are relevant to the shipbuilding functions. This list is not exhaustive and can be modified to reflect the construction facilities or specific ship type.

2. Evidence is also to be made available, as required, by the shipbuilder, to the surveyor whilst the construction process proceeds to prove that the material and equipment supplied to the ship has been built or manufactured under survey relevant to the classification rules and statutory requirements.

F. Review of the construction facility[3)]

1. The Surveyor is to familiarize themselves with the yard's production facilities, management processes, and Safety for consideration in complying with the requirements of Table A.2.1 prior to any steelwork or construction taking place in the following circumstances:

1.1 where surveyor has none or no recent experience of the construction facilities – typically after a one year lapse - or when significant new infrastructure has been added;

1.2 where there has been a significant management or personnel re-structuring having an impact on the ship construction process;

1.3 or where the shipbuilder contracts to construct a vessel of a different type or substantially different in design.

G. New building survey planning

1. Prior to commencement of surveys for any newbuilding project, BKI is to discuss with the shipbuilder at a kick off meeting the items listed in Table A.2.1. The purpose of the meeting is to review and agree how the list of specific activities shown in Table A.2.1 is to be addressed. The meeting is to take into account the shipbuilder's construction facilities and ship type including the list of proposed subcontractors.

A record of the meeting is to be made, based upon the contents of the Table A.2.1 – the Table can be used as the record with comments made into the appropriate column. If BKI has nominated a surveyor for a specific newbuilding project then the surveyor is to attend the kick off meeting.

The builder should agree to undertake ad hoc investigations during construction as may be requested by Class where areas of concern arise and the builder to agree to keep BKI advised of the progress of any investigation. Whenever an investigation is undertaken, the builder is to be requested, in principle, to agree to suspend relevant construction activities if warranted by the severity of the problem.

[3)] Reference is made to Table A.2.2 as an example.

2. The records are to take note of specific published Administration requirements and interpretations of statutory requirements.

3. The shipyard shall be requested to advise of any changes to the activities agreed at the kick off meeting and these are to be documented in the survey plan. e.g. if the shipbuilder chooses to use or change sub-contractors, or to incorporate any modifications necessitated by changes in production or inspection methods, rules and regulations, structural modifications, or in the event where increased inspection requirements are deemed necessary as a result of a substantial non-conformance or otherwise.

4. Shipbuilding quality standards for the hull structure during new construction are to be reviewed and agreed during the kick-off meeting. Structural fabrication is to be carried out in accordance with Guidance for Marine Industry (Pt.1, Vol.AC) Sec.3.R-47, "Shipbuilding and Repair Quality Standard", or a Recognized Fabrication Standard (RFS) which has been accepted by BKI prior to the commencement of fabrication/construction. The work is to be carried out in accordance with the Rules and under survey of BKI.

BKI may accept an RFS as an alternative to Guidance for Marine Industry (Pt.1, Vol.AC) Sec.3.R-47 provided that 4.1 or 4.2 is complied with as applicable.

4.1 Where a RFS is well established and has well documented history (3 or more years prior to the new ship contract) of successful application to similar designs as the new ship and that history is for the same Shipyard as the new ship. Then the Shipyard is to create a summary document referencing the RFS to be used in construction and highlighting any limitations to usage of the selected RFS. This summary document is to be included with the "record of kick-off meeting" for the ship.

The summary document is also to be included in the SCF, (for Tankers and Bulk Carriers subject to SOLAS Chapter II-1 Part A-1 Regulation 3-10 refer to Rules for Oil Tanker and Bulk Carriers (Pt.1, Vol.XVII.A), Table 3.3 Tier II Item 11), as applicable.

4.2 Where a RFS is new or revised or otherwise not as per 4.1 the following steps are to be carried out:

1) The tolerances and fabrications standards of the RFS are to be compared with those of Guidance for Marine Industry (Pt.1, Vol.AC) Sec.3.R-47. Any that are less stringent than those of Guidance for Marine Industry (Pt.1, Vol.AC) Sec.3.R-47 are to be identified.

2) The tolerances and fabrication standards of the RFS identified in 1) are to be assessed to determine the acceptability for use and/or any restrictions for usage for the subject (or proposed) design. Details of how the acceptability for use and/or restrictions are to be recorded, and,

3) A summary document including the outcomes of 1) and 2) is to be compiled. This document is to also include a reference to the RFS, details of the tolerance and fabrication standards not analysed as part of 2) and any limitations to the usage of the RFS.

The summary document is to be included with the "record of the kick-off meeting" of the ship. The summary document is also to be included in the SCF, (for Tankers and Bulk Carriers subject to SOLAS Chapter II-1 Part A-1 Regulation 3-10 refer to Rules for Oil Tanker and Bulk Carriers (Pt.1, Vol.XVII.A), Table 3.3 Tier II Item 11), as applicable.

5. The kick-off meeting may be attended by other parties (owner, administrations, etc.) subject to agreement by the shipbuilder.

6. In the event of series ship production[4)], the requirement for a kick off meeting in 1. may be waived for the second and subsequent ships provided that no changes to the specific activities agreed in the kick off meeting for the first ship are introduced. If any changes are introduced, these are to be agreed in a new dedicated meeting and documented in a record of such meeting.

[4)] Series Ship Production: vessels in the series subsequent to the first one (prototype), i.e. sister ships built in the same shipyard.

H. Examination and test plan for newbuilding activities

1. The shipbuilder is to provide plans of the items which are intended to be examined and tested. These plans need not be submitted for approval and examination at the time of the kick off meeting. They are to include:

1.1 proposals for the examination of completed steelwork - generally referred to as the block plan and are to include details of joining blocks together at the pre-erection and erection stages or at other relevant stages;

1.2 proposals for fit up examinations where necessary;

1.3 proposals for testing of the structure (leak and hydrostatic) as well as for all watertight and weathertight closing appliances;

1.4 proposals for non-destructive examination;

1.5 any other proposals specific to the ship type or to the statutory requirements.

2. The plans and any modifications to them are to be submitted to the surveyors in sufficient time to allow review before the relevant survey activity commences.

3. In addition to above, for Tankers and Bulk Carriers subject to SOLAS Chapter II-1 Part A-1 Regulation 3-10 see also K.1.

I. Proof of the consistency of surveys

1. BKI is to be able to provide evidence, e.g. through records, check lists, inspection and test records, etc. that its surveyors have complied with the requirements of the newbuilding survey planning and duly participated in the relevant activities shown in the shipbuilder's examination and test plans.

2. In addition, BKI is to maintain records of deficiencies found during the patrolling activities required in Table A.2.1 and described in B.3.1.

Records shall include the date when deficiency was found, description of the deficiency and the date the deficiency was cleared.

J. Ship Construction File

1. The purposes of this requiremenrts are applicable to all ships except the Tankers and Bulk Carriers subject to SOLAS Chapter II-1 Part A-1 Regulation 3-10 for which the K.3 is to be applied. The shipbuilder is to deliver documents for the Ship Construction File. In the event that items have been provided by another party such as the shipowner and where separate arrangements have been made for document delivery which excludes the shipbuilder, that party has the responsibility.

The Ship Construction File shall be reviewed for content in accordance with the requirements 2.

2. It is recognised that the purpose of documents held in the Ship Construction File on board the ship, is to facilitate inspection (survey) and repair and maintenance, and, therefore, is to include in addition to documents listed in Table A.2.1, but not be limited to:

2.1 As-built structural drawings including scantling details, material details, and, as applicable, wastage allowances, location of butts and seams, cross section details and locations of all partial and full penetration welds, areas identified for close attention and rudders (Refer to Section 3 and 4);

2.2 Manuals required for classification and statutory requirements, e.g. loading and stability, bow doors and inner doors and side shell doors and stern doors – operations and maintenance manuals (Refer to Rules for Hull (Pt.1, Vol.II), Sec. 6, H and J);

2.3 ship structure access manual, as applicable;

2.4 copies of certificates of forgings and castings welded into the hull (Refer to Rules for Materials (Pt.1, Vol.V), Sec. 6 and 7);

2.5 details of equipment forming part of the watertight and weather tight integrity of the ship;

2.5.1 Cable Transit Seal Systems Register (Register), to be prepared by the shipbuilder for watertight cable transits. The Register can be in either a hard copy or digitized media. For an example of a register see Annex A.5, Table A.5.1. It is to include a marking/identification system, documentation referencing manufacturer manual(s) for each type of cable transit installed, the Type Approval certification for each type of transit system, applicable installation drawings, and a recording of each installed transit documenting the as built condition after final inspection in the shipyard. This is to include sections to record any inspection, modification, repair and maintenance

2.6 tank testing plan including details of the test requirements (Refer to Annex A.6);

2.7 corrosion protection specifications (Refer to Rules for Hull (Pt.1, Vol.II), Sec. 38, F and G.1.1);

2.8 details for the in-water survey, if applicable, information for divers, clearances measurements instructions etc., tank and compartment boundaries;

2.9 docking plan and details of all penetrations normally examined at drydocking;

2.10 Coating Technical File, for ships subject to compliance with the IMO Performance Standard for Protective Coatings (PSPC) as a class requirement under Rules for Bulk Carrier and Oil Tanker (Pt.1, Vol.XVII)

K. Requirements for Tankers and Bulk Carriers subject to SOLAS Chapter II-1 Part A-1 Regulation 3-10 (Goal-based ship construction standards for bulk carriers and oil tankers)

1. Examination and test plan for newbuilding activities

The shipbuilder is to provide plans of the items which are intended to be examined and tested in accordance with BKI Rules in a document known as the Survey Plan, taking into account the ship type and design. This Survey Plan shall be reviewed at the time of the kick off meeting, and must include:

1.1 A set of requirements, including specifying the extent and scope of the construction survey(s) and identifying areas that need special attention during the survey(s), to ensure compliance of construction with mandatory ship construction standards including:

1) Types of surveys (visual, non-destructive examination, etc.) depending on location, materials, welding, casting, coatings, etc.

2) Establishment of a construction survey schedule for all assembly stages from the kick-off meeting, through all major construction phases, up to delivery.

3) Inspection/survey plan, including provisions for critical areas identified during design approval.

4) Inspection criteria for acceptance.

5) Interaction with shipyard, including notification and documentation of survey results.

6) Correction procedures to remedy construction defects.

7) List of items that would require scheduling or formal surveys.

8) Determination and documentation of areas that need special attention throughout ship's life, including criteria used in making the determination.

1.2 A description of the requirements for all types of testing during survey, including test criteria.

2. Design Transparency

For ships subject to compliance with IMO Res. MSC.287(87), IMO Res. MSC.290(87), IMO Res. MSC.454(100) and IMO MSC.1/Circ.1343, readily available documentation is to include the main goal-based parameters and all relevant design parameters that may limit the operation of the ship.

3. Ship Construction File (SCF)

Refer to Rules for Oil Tanker and Bulk Carriers (Pt.1, Vol.XVII.A), Sec. 3, C.

4. Determination of number of Surveyor(s)

BKI will assign adequate number of suitable qualified surveyor(s) for newbuilding projects according to the construction progress of each ship to meet appropriate coverage of the examination and testing activities as agreed in the Survey Plan.

Table A.2.1 Hull Surveyable Items Activities

Ref.	Shipbuilding function	Survey Requirements for Classification	Survey Method required for Classification	IACS BKI reference	Statutory requirements and relevant reference	Documentation available to classification surveyor during construction	Documentation for ship construction file	Specific activities	Classification society proposals for the project
	shipbuilding quality control function								
1	**welding**								
1.1	**welding consumables**	Classification approved separately at the manufacturer	review approval status and patrol, verify storage, handling and treatment in accordance with manufacturer's requirements	Rules for Welding (Pt.1, Vol.VI), Sec. 5		consumable specification and approval status	not required	Identify consumables against approved list	
								verify temporary and permanent storage facilities	e.g. kept dry, covered, where applicable heated
								verify traceability	e.g. random batch number checking
1.2	**welder qualification**		review of welder certification and patrol	Guidance for Marine Industry (Pt.1, Vol.AC) Sec.3.R-47		shipyards records with individual's identification	not required	verify welder qualification standard, e.g. class or recognised standard approval	
								verify welder approved for weld position	
								verify validity of qualification certificate	
1.3	**Welding - mechanical properties (welding procedures)**	All weld joint configurations, positions and materials to be covered by weld procedures approved by the classification society or by another IACS member available	review and patrol	Rules for Welding (Pt.1,Vol.VI), Sec. 12, F		Approved weld procedure specification and welding plan relevant to the ship project or process	not required	verify procedures are available at relevant workstations	

Table A.2.1: Hull Surveyable Items Activities *(continued)*

Ref.	Shipbuilding function	Survey Requirements for Classification	Survey Method required for Classification	IACS / BKI reference	Statutory requirements and relevant reference	Documentation available to classification surveyor during construction	Documentation for ship construction file	Specific activities	Classification society proposals for the project
		the classification society witnesses all new weld procedure qualification tests carried out in the shipyard whenever the classification society is surveying in the shipyard	witness					verify weld procedures records have been approved and cover all weld processes and positions in accordance with classification or recognised standards and are available for the surveyors reference	
1.3a	Welding equipment	correctly calibrated and maintained	patrol and review			shipbuilders maintenance and calibration records	not required	verify condition of machinery and equipment.	
								verify machines are calibrated by appropriate staff	
								verify calibration carried out in accordance with manufacturer's recommendations	
								verify calibration in accordance with maintenance schedule	
1.3b	**Welding environment**	satisfactory environment	patrol	Guidance for Marine Industry (Pt.1, Vol.AC) Sec.3.R-47			not required	Verify welding areas clean, dry, well lit.	
								Confirm relevant measures taken for any pre or post heat treatment, drying of surfaces prior to welding	

Table A.2.1: Hull Surveyable Items Activities *(continued)*

Ref.	Shipbuilding function	Survey Requirements for Classification	Survey Method required for Classification	IACS / BKI reference	Statutory requirements and relevant reference	Documentation available to classification surveyor during construction	Documentation for ship construction file	Specific activities	Classification society proposals for the project
								Confirm shielding gases, fluxes protected	
1.3c	**welding supervision**	sufficient number of skilled supervisors	Review and patrol	Rules for Welding (Pt.1, Vol.VI), Sec. 10 and Guidance for Marine Industry (Pt.1, Vol.AC) Sec.3.R-47				verify supervision is effective	
1.4	**welding-surface discontinuities**	Substantially free from significant indications, satisfactory profile and size	visual examination. surface detection techniques, review of documents and patrol of operator	Rules for Welding (Pt.1, Vol.VI), Sec. 10 and Guidance for Marine Industry (Pt.1, Vol.AC) Sec.3.R-47		Shipbuilders and recognised standards and Rules as applicable, welding and NDE plans, NDE reports, operator qualifications	not required	Identify workstations where NDE is carried out, e.g. panel line butt welds, castings into hull structure	
								Verify NDE carried out in accordance with approved plans where applicable	
								Verify suitability of NDE methods	
								Verify operators suitably qualified particularly where sub-contractors have been employed	
								Verify NDE is carried out according to the acceptable process	
								Review NDE records	

Table A.2.1: Hull Surveyable Items Activities *(continued)*

Ref.	Shipbuilding function	Survey Requirements for Classification	Survey Method required for Classification	IACS / BKI reference	Statutory requirements and relevant reference	Documentation available to classification surveyor during construction	Documentation for ship construction file	Specific activities	Classification society proposals for the project
1.5	**Welding - embedded discontinuities**	NDE is to be carried out by qualified operators capable of ensuring that welds are substantially free from significant indications	Radiography and ultrasonic testing, review of documents and patrol of operator, examination of films	Rules for Welding (Pt.1, Vol.VI), Sec. 10 and Guidance for Marine Industry (Pt.1, Vol.AC) Sec.3.R-47		Shipbuilders and recognised standards and Rules as applicable, welding and NDE plans, NDE reports, operator qualifications	not required	Identify workstations where NDE is carried out, e.g. panel line butt welds, castings into hull structure	
								Verify NDE carried out in accordance with approved plans where applicable	
								Verify suitability of NDE methods	
								Verify operators suitably qualified particularly where sub-contractors have been employed	
								Verify that records have been completed and in accordance with recognised standards, e.g. IQI and sensitivity recorded	
								Verify that reports and radiographs have been evaluated correctly by the shipbuilder. Systematic review of radiographs carried out by the surveyor	

Table A.2.1: Hull Surveyable Items Activities *(continued)*

Ref.	Shipbuilding function	Survey Requirements for Classification	Survey Method required for Classification	IACS / BKI reference	Statutory requirements and relevant reference	Documentation available to classification surveyor during construction	Documentation for ship construction file	Specific activities	Classification society proposals for the project
								Verify equipment calibration satisfactory and in accordance with manufacturers and recognised standards requirements	
								Verify NDE is carried out according to the acceptable process	
2	**Steel preparation and fit up :**								
2.1	**surface preparation marking and cutting**	traceability and acceptability of material, check of steel plates & profiles materials type, scantling identification, testing marks	patrol	Guidance for Marine Industry (Pt.1, Vol.AC) Sec.3.R-47		material certificates, shipbuilder's marking/cutting production documents at the workstage documents retained at the facility	not required	Verify stockyard storage satisfactory	
								Verify material traceability, e.g. stamping identification against material certification, archiving of records	
								Verify transfer marking after treatment line	
								Verify standard of shotblasting and priming	
								Verify suitability of primer	
								Verify that steel grades can be identified	

Table A.2.1: Hull Surveyable Items Activities *(continued)*

Ref.	Shipbuilding function	Survey Requirements for Classification	Survey Method required for Classification	IACS / BKI reference	Statutory requirements and relevant reference	Documentation available to classification surveyor during construction	Documentation for ship construction file	Specific activities	Classification society proposals for the project
								Verify machinery adjusted to maintain within IACS or manufacturers recommendations.	
								Verify accuracy of marking and cutting	
								Verify storage of piece parts.	
2.2	**straightening**	Approval of straightening methods/ procedures against deformation	patrol and review	Guidance for Marine Industry (Pt.1, Vol.AC) Sec.3.R-47		recognised standards, approved procedures	not required	Verify that straightening processes are approved for the grade and type of steel, e.g. tmcp, z plate.	
								Verify that plates and sections are within recognised tolerances	
2.3	**forming**	Maintain material properties. Acceptance of forming method against unproper deformations	patrol	Guidance for Marine Industry (Pt.1, Vol.AC) Sec.3.R-47		Shipbuilders procedure for hot forming	not required	Verify that temperature control is exercised by the operator.	
								Verify that suitable methods of temperature control are available when forming special steels and materials	
								Verify that forming processes are acceptable	

Table A.2.1: Hull Surveyable Items Activities *(continued)*

Ref.	Shipbuilding function	Survey Requirements for Classification	Survey Method required for Classification	IACS / BKI reference	Statutory requirements and relevant reference	Documentation available to classification surveyor during construction	Documentation for ship construction file	Specific activities	Classification society proposals for the project
2.4	**conformity with alignment/fit up/gap criteria**	Check alignment/fit up/gap against reference standards	patrol	Guidance for Marine Industry (Pt.1, Vol.AC) Sec.3.R-47		Shipbuilders and recognised standards and Rules as applicable,	not required	Verify the processes to ensure satisfactory fit up and alignment at all workstations	
								Verify that edge preparations are re- instated where lost during fitting operations	
								Verify remedial procedures are in place to compensate for wide gaps and alignment deviations	
2.5	**conformity for critical areas, when defined, with alignment/fit up or weld configuration**	Check alignment/fit up/gap against approved drawings	witness and review	Guidance for Marine Industry (Pt.1, Vol.AC) Sec.3.R-47		Shipbuilders and recognised standards and Rules as applicable, approved plan or standard, builder's records	Approved plans of critical areas if applicable	Verify that the information relevant to the latest approved drawings is available at the workstations	
								Verify the processes to ensure satisfactory fit up and alignment at all workstations	
								Verify that edge preparations are re- instated where lost during fitting operations	
								Verify remedial procedures are in place to compensate for wide gaps and alignment deviations	

Table A.2.1: Hull Surveyable Items Activities *(continued)*

Ref.	Shipbuilding function	Survey Requirements for Classification	Survey Method required for Classification	IACS / BKI reference	Statutory requirements and relevant reference	Documentation available to classification surveyor during construction	Documentation for ship construction file	Specific activities	Classification society proposals for the project
3	**Steelwork process, e.g. sub assembly, block, grand and mega block assembly, pre-erection and erection, closing plates**	compliance with approved drawings, visual examination of welding and material, check alignment and deformations	patrol of the process and witness of the completed item	Guidance for MarineIndustry (Pt.1, Vol.AC) Sec.3.R-47		approved plans, shipbuilders inspection records, Shipbuilders and recognised standards and Rules as applicable, construction plan (steelwork sub-division)		Verify that the information relevant to the latest approved drawings is available at the workstations	
								Verify that correct weld sizes have been adopted	
								Verify operation of the welding processes at the different work stages is satisfactory	
								Verify that piece parts are identifiable	
								Verify that fit ups are within recognised tolerances	
								Verify that correct welding requirements specified in reference 1 of this table have been adopted	
								Verify processes for closing plates etc. are acceptable	
								Confirm that steelwork is in accordance with the approved plan	

Table A.2.1: Hull Surveyable Items Activities *(continued)*

Ref.	Shipbuilding function	Survey Requirements for Classification	Survey Method required for Classification	IACS / BKI reference	Statutory requirements and relevant reference	Documentation available to classification surveyor during construction	Documentation for ship construction file	Specific activities	Classification society proposals for the project
4	Remedial work and alteration	welding, check against deformation, alignment	review records and witness	Guidance for Marine Industry (Pt.1, Vol.AC) Sec.3.R-47		permanent record of shipyard surveyable item		Verify that records have been maintained of significant deviations from the approved plans, for situations such as mis cut openings, re-routing outfit items	
								Verify that all deviations brought to the attention of the classification society by the shipbuilder are acceptable	
5	**Tightness testing, including leak and hose testing, hydropneumatic testing**	Absence of leaks	Review and witness of the test	Annex A.6	Reg. II-1/11 of SOLAS as amended;	approved tank testing plan, shipbuilders inspection records	approved tank testing plan	Confirm that tank testing is carried out in accordance with the approved plan	
								Confirm the methods used to carry out leak testing	
								Confirm that correct test pressures maintained for leak, hose and hydro and hydropneumatic testing is satisfactory	
								Verify that adequate records of the tank testing have been maintained	

Table A.2.1: Hull Surveyable Items Activities *(continued)*

Ref.	Shipbuilding function	Survey Requirements for Classification	Survey Method required for Classification	IACS / BKI reference	Statutory requirements and relevant reference	Documentation available to classification surveyor during construction	Documentation for ship construction file	Specific activities	Classification society proposals for the project
6	**Structural testing**	structural adequacy of the design	Review and witness of the test	Annex A.6	Reg, II-1/11 of SOLAS as amended;	approved tank testing plan, shipbuilders inspection records	approved tank testing plan	Confirm that tank testing is carried out in accordance with the approved plan	
								Confirm that correct test pressures maintained for testing is satisfactory	
								Verify that adequate records of the tank testing have been maintained	
7	**corrosion protection systems, e.g. coatings, cathodic protection, impressed current except for coating system subject to PSPC**	Salt water ballast tanks with boundaries formed by the hull envelope, and also bulk carrier hold internal surfaces, coamings and hatch covers shall have an efficient protective coating. Safety aspects of cathodic systems to be dealt with separately.	Review and report on builder's & manufacturer's documentation	Rules for Hull (Pt.1, Vol.II), Sec. 24A.10, 38.F and G.I.I and Guidelines for Code and Convention Interpretation (Pt.1, Vol.Y), Sec. 11, SC	Reg. II-1/3-2 of SOLAS as amended	manufacturer's and builder's specification	corrosion protection specifications	Verify that applied coatings are approved and review records of application	
								Verify that adequate records have been maintained and copied to the ship construction file	

Table A.2.1: Hull Surveyable Items Activities *(continued)*

Ref.	Shipbuilding function	Survey Requirements for Classification	Survey Method required for Classification	IACS / BKI reference	Statutory requirements and relevant reference	Documentation available to classification surveyor during construction	Documentation for ship construction file	Specific activities	Classification society proposals for the project
	Application Antifouling Systems		Review		AFS Convention	Painting Specification	Paint Specification and Mfg Declaration	Verify that adequate records have been maintained and copied to the ship construction file	
7.1	Application of Protective Coatings for Dedicated Seawater Ballast Tanks in all Types of Ships and Double-Side Skin Spaces of Bulk	monitor implementation of the coating inspection requirements	Patrolling and Review	Guidelines for Code and Convention Interpretation (Pt.1, Vol.Y), Sec. 11, SC 223	Reg. II-1/3-2 of SOLAS as amended;	Signed and Verified Tripartite Agreement	Coating Technical File	Verify that applied coatings are approved and review records of application in accordance with Chapter 7 of Annex to MSC.21S(82).	
8	Installation, welding and testing of the following:								
8.1	**hatch covers**	tightness and securing	witness	Annex A.6 and Rules for Hull (Pt.1, Vol.II), Sec. 17.B.6	Reg. 13-14-15 and 16 of ILLC'66	approved tank testing plan, shipbuilders inspection records	details required, structural drawings	Confirm leak test of hatch covers	
								Confirm operation and securing test	
8.2	doors and ramps integral with the shell and bulkheads	tightness and securing	witness	Annex A.6	Reg. II-1/18 of SOLAS as amended; Reg. 12 and 21 of ILLC '66	approved tank testing plan, shipbuilders inspection records	details required	Confirm leak test	
								Confirm operation and securing test	
								Confirm safety device operation	
								Ensure correct maintenance logs/manuals supplied with the ship construction file	

Table A.2.1: Hull Surveyable Items Activities *(continued)*

Ref.	Shipbuilding function	Survey Requirements for Classification	Survey Method required for Classification	IACS / BKI reference	Statutory requirements and relevant reference	Documentation available to classification surveyor during construction	Documentation for ship construction file	Specific activities	Classification society proposals for the project
8.3	**rudders**	fitting	witness	Annex A.6		approved plan, shipbuilders inspection records	details required, structural drawings	Confirm alignment and mounting and fitting up to the connection to the tiller	
								Confirm function test	
								Verify fitting of pintles and all securing bolts	
								Verify all fit up records including all clearances maintained and placed into ship construction file	
8.4	**forgings and castings**	compliance with approved drawings, visual examination of welding and material, check alignment and deformations	patrol of the process and witness of the completed item	Rules for Materials (Pt.1, Vol.V), Sec. 6 and 7		approved plans, shipbuilders inspection records, Shipbuilders and recognised standards and Rules as applicable, construction plan (steelwork sub-division)	copies of certificates of forgings and castings	Verify casting and forgings against material certificate	
								Verify that correct welding and fit up requirements specified in reference 1, 2.4 and 2.5 of this table have been adopted	
								Verify that material certificates are included in the ship construction file	

Table A.2.1: Hull Surveyable Items Activities *(continued)*

Ref.	Shipbuilding function	Survey Requirements for Classification	Survey Method required for Classification	IACS / BKI reference	Statutory requirements and relevant reference	Documentation available to classification surveyor during construction	Documentation for ship construction file	Specific activities	Classification society proposals for the project
	appendages							Verify that correct welding and fit up requirements specified in reference 1, 2.4 and 2.5 of this table have been adopted	
8.5	**equipment forming the watertight and weathertight integrity of the ship, e.g. overboard discharges, air pipes, ventilators**	tightness and securing	Witness	Guidance for the Approval and Type Approval of Materials and Manufactures (Pt.1, Vol.W), Sec. 3, R	Reg. II-1/16 and Reg. II- 1/16-1 of SOLAS as amended; Reg. 17-18-19-20-22-23 of ILLC '66	approved tank testing plan, shipbuilders inspection records	details required	Verify that correct welding and fit up requirements specified in reference 1, 2.4 and 2.5 of this table have been adopted	
								Verify Compliance with Load line Convention 1966 as amended - i.e. all fittings in accordance with the record of freeboard assignment	
								Verify air pipes, vents etc closing device are approved type	
								Verify material certificates for overboard discharges where applicable	

Table A.2.1: Hull Surveyable Items Activities *(continued)*

Ref.	Shipbuilding function	Survey Requirements for Classification	Survey Method required for Classification	IACS / BKI reference	Statutory requirements and relevant reference	Documentation available to classification surveyor during construction	Documentation for ship construction file	Specific activities	Classification society proposals for the project
								Verify record of freeboard assignment and all material certificates included in the ship construction file	
	Freeboard marks and draft marks	Within allowable tolerances and in accordance with the freeboard assignment	witness	Guidance for the Approval and Type Approval of Materials and Manufactures (Pt.1, Vol.W), Sec.3, R	Reg. 4-5-6-7 and 8 of ILLC'66		details required	Verify freeboard marks in accordance with load line assignment	
								Verify draft marks in accordance with the agreed tolerances specified by the builder unless more onerous flag state requirements	
	Principal dimensions	within allowable tolerances	review and witness	Guidance for Marine Industry (Pt.1, Vol.AC) Sec.3.R-47			details required	Verify principal dimensions in accordance with recognised standard	
								Verify dimensions included in ship construction file	
	Safety Construction Certification	no outstanding imperfections or defects	witness		Reg. I/7 or Reg. I/10 of SOLAS as amended, as appropriate			Verify that Administration requirements have been incorporated into the hull structure	

Table A.2.1: Hull Surveyable Items Activities *(continued)*

Ref.	Shipbuilding function	Survey Requirements for Classification	Survey Method required for Classification	IACS / BKI reference	Statutory requirements and relevant reference	Documentation available to classification surveyor during construction	Documentation for ship construction file	Specific activities	Classification society proposals for the project
8.6	**Watertight cable transit seal systems**	compliance with approved drawings, visual examination of fitting. check alignment and securing	patrol of the process and witness of the completed item		Reg. II-1/13 and 13-1 of SOLAS as amended	shipbuilder's inspection records, manufacturer's specification	Cable Transit Seal systems Register	Verify that correct welding and fit up requirements, including as specified in reference 1, 2.4 and 2.5 of this table have been adopted	
								Verity watertight cable transit seal systems are type approved.	
								Verify the format and content of the Register.	

Shipbuilder's name	
project	
project duration	
kick off meeting date	
representing builder	
representing class society	

* IACS Recommendations are not mandatory requirements.

Table A.2.2 Shipyard Review Record

Name of Shipyard	Date

1. Details of any Management Systems

Obtained Approval	Certified by	Expiry Date	Remarks (scope,ect)
ISO-9001			
ISO 14001			
ISO 45001			
Other:			

2. Construction facilities:

Document such as a brochure of shipyard can be attached in lieu of completing this section.

2.1 Building Berth (B) or Dock (D)

B/D	Name	Length (m)	Width (m)	Depth* (m)	Building Capacity (Gross Tonnage)	Crane (Ton x No.)
*In case of berth, Depth is not applicable						

2.2 Outfitting Quays

Name	Length (m)	Width (m)	Depth* (m)	Berthing Capacity (Gross Tonnage)	Crane (Ton x No.)

2.3 Main Fabrication and erection facilities

2.3.1 Main and cutting of steel plates (including internal member)

- Marking method	(Manual, Photo x ___, EPM x ___, NC x ___others _____)
- NC cutting machine Control procedure of NC	(Gas x ___, Plasma x ___, Lasser x ___) (On-line, other)
- Cutting equipment	(Edge planer x ___, Roll-share x ___)

2.3.2 Marking and cutting of section bar

- Marking method	(Manual, NC)	- Marking of reference curved line (Manual, NC)
- Cutting method	(Manual, NC)	- In case of NC (Gas x ___, Plasma x ___)

2.3.3 One-side automatic welding machine (Yes, No)

- Type of welding machine	(Flux Backing x ___, Flux and Copper Backing x ___ other_____)
- Existence of special surface plate for plate welding (Yes, No)	

2.3.4 Fillet welding machine

Fillet welding machine (Gravity, Automatic)	Percentage of automatization except gravity : about ___ %
- Line welder	(No, Yes: submarged arc x ___heads, CO2 x___heads)
- Small automatic fillet welding machine	(No, Yes: Name: _____ x ___)
- Welding robot	(No, Yes: Portal x ___, Rectangular x___, Articulated X ___)

2.3.5 Painting equipment

- Plate shot blasting/primer coating machine	(No, Yes: Max. Width___m, Length ___m)
- Section bar shote	(No, Yes: Max. Length ___ m)
- Special coating factory	(No, Yes: ___ m x ___ m x ___ sections)

2.3.6 Vertical automatic welding machine

Vertical automatic welding machine (No, Yes: EG x ___ , SEG x ___, ES x ___)		
EG : Electrogas	SEG : Simplified Electrogas	ES : Electroslag

2.3.7 Other main fabrication facilities

3. Shipyard control of Qualified Welders

(1) Normal Steel

		certification	**traceability**	**supervision**	**maintenance of qualification**
Shipyard worker	confirm system in place	Yes / no	Yes / no	Yes / no	Yes / no
Subcontracted workers	confirm system in place	Yes / no	Yes / no	Yes / no	Yes / no

4. Feature of Construction Procedure

(1) Subcontract of hull block (weigth) - Sub members (No, Yes: Ratio of subcontracted works ___%, No., of subcontructors ___) - Block (No, Yes: Ratio of subcontracted works ___%, No., of subcontructors ___)
(2) Method of plate block assembly - Method fitting and welding longitudinals and transverse webs on jointed panels - Method welding longitudinal on jointed panels prior to fitting and welding transverse webs - Method fitting and welding a frame consists of longitudinals and transverse webs on jointed panels - Method jointning panels with pre-assembled longitudinals by welding prior to fitting and welding transverse webs - Other (please specify in (5) below)
(3) pre-erection outfitting carried out grand block/mega block adopted Method of erection at building berth/dock - Max. Weight of loading block : ton - Construction method in buliding dock/berth/land construction etc. (1 ship, 1.5 ships: Semi-tandem, dual entrance - Block loading process (single starting block, multi starting blocks, inserting block : No, Yes)
(4) Final dock (No, Yes: In-house, Other place of the same company, use other company)
(5) Other feature of contruction procedure

5. Quality Control System : (Refer to Quality manual, if available)

Item and description	Result	Remark
(1) Existence of the organization chart including the departments of design, purchasing, maunufactiring and quality assurance - Are the function, responsibility and competence of the organization clear?		
(2) Quality control organization - Existence of quality control organization - Number of employees in this organization - Existence of procedures or plans related to test and inspections	_____ person including the chief	
(3) Pre-inspection system of shipyard - Is pre-inspection carried out prior to Class inspection? - Are pre-inspection assigned? (Check the list) - Number of pre-inspectors (releted to hull only) - Are inspection result markedmark on the object and /or recorded in the checklist	_____ persons	
(4) Records of inspection and tests - Are records made and kept properly? - Does the responsible person verify the records? - Can the adoption of necessary corrective actions against non conformity happened be checked?		
(5) Condition at the time of the surveys in the presence of class surveyors - Is the schedule of the surveys changed often? - Are pre inspection, shipyard inspection and repairs completed beforehand? - Are the sufficient preparations for surveys such as scaffoldings, lighting, cleaning made ?		
Note: Above mentioned (3) and (4) include the acceptance inspection of subcontracted items.		

6. Measure for Safety and Health

Item and description	Result	Remarks
(1) Are conditions of scaffolding, nets, safety belt, lighting and ventilation good?		
(2) Does sufficient attention paid for radiographic examination and operation of cherry picker?		
Note :		

7. Control System of Non-Destructive Examination (NDE)

Item and description	Result	Remarks
(1) Number of NDE supervisors in shipyard (including persons responsible for judging result)	_____persons	
(2) Dependence on subcontracted NDE work - Number of shipyard employees - Number of sub contractors	 _____ persons _____ persons	
(3) NDE sub contractor company's name and official technical qualifications	Name _____ (approved by)_____ Name _____ (approved by)_____	
(4) Grade and number of NDE employees with official technical qualifications in shipyard - Specialized in radiography - Specialized in ultrasonic - Specialized in surface detection	 ___ Grade ___ persons ___ Grade ___ persons ___ Grade ___ persons	
(5) If non destructive examinations are subcontracted, the grade and number of officially qualified persons - Specialized in radiography - Specialized in ultrasonic - Specialized in surface detection	 ___ Grade ___ persons ___ Grade ___ persons ___ Grade ___ persons	
(6) Non destructive examination equipment (in house) - Number of radiographic equipment - Number of ultrasonic equipment	 _____ _____	
Note : Even if all works are subcontracted, it is recommendable to attach the qualified person(s) who can verify the works.		

8. Quality Control on Production Line

Item and description	Result	Remarks
8.1 Preventative measures for misuse of materials		
(1) Job title of supervisor and person in charge of collating ordered steel and received steel, and checking of mill sheet	Title of supervisor: _____ Title of person in charge: _____	
(2) Are means for checking the material grade in hand prescribed for high grade steels		
(3) Are regulations prescribed for checking the material grade for high tensile steel for low temperature applications? Are there regulations for inscribing high tensile steel on the surface of the high tensile steel and special indication for steel for low temperatre applications?		
(4) Are procedures for re using of remaining cut off mild steel?		
(5) Are there procedures for re using of remaining cut off high-tensile steel?		
(6) In the case of (4) and (5) above, can a collation be made with the mill sheet?		
(7) Section of controlling the lists of remaining cut off steel	Name of section: _____	
Note: - In case of high tensile steel, are means identifying different grades - In the case of (3) and (4) above, are the materials approved by other classes controlled similarly?		

Item and description	Result	Remarks
8.2 Shot blasting/Primer coating		
(1) Existence of surface preparation standards		
(2) Existence of coating thickness control standards - Existence of thickness measurement records		
Note: The standard is to include the description related traceability after shot blasting and primer coating.		
8.3 Marking and cutting (Assembly work)		
(1) Existence of standards for accuracy and periodical inspection of tape measures, tapes, stencils, etc.		
(2) Existence of standards for accuracy of cut dimensions and edge preparation		
(3) Existence of standards for finish of cutting face		
(4) What is the frequency and extent of maintenance and inspection carried out for ensuring accuracy of NC cutter and/or flame planer?		
(5) In case of NC, are the disks, tapes etc. maintained in good condition?		
(6) What are the measures adopted and guidance given to make the worker fully conversant with cutting work standards for maintaining accuracy?		
Note: - In case of (2) and (3) above, check items are to include confirmation of edge preparations free from piercing hole. - NC for section bars is also to be in accordance with the above.		
8.4 Bending and strain free		
(1) Existence of standards for maximum heating temperatures during water cooling and at the time of bending and distortion removal of steel by quick heating and cooling		
(2) Existence of regulations for plate thickness and bending radius for flange processing		
(3) What are the measures adopted and guidance given to make the worker fully conversant with maintaining quality and accuracy during the bending process?		
Note:		
8.5 Control of Welding Procedure		
(1) Are all welding procedures applied to the ships approved by BKI or other IACS members?		
Note:		
8.6 Treatment of serious non-conformities		
(1) Are repair plans submitted to BKI when serious non conformities happened?		
(2) Were the NDE (RT/UT) plans submitted at appropriate timing?		
(3) Was the extent of tests extended considering the results of the test?		
Note:		
8.7 Hydrostatic and Watertight Test		
(1) Is the test plan submitted to BKI?		
(2) Are vacuum tests applied to?		
(3) Are local air injection tests during sub assembly works applied to?		
Note :		

A.3 The Wastage Allowance

1. Where thickness measurements according to result in corrosion and wear values exceeding those stated in the following, the respective hull structural elements will have to be renewed. Where reduced material thickness was admitted for the new building (effective system of corrosion prevention), the permissible corrosion allowances are to be based on the unreduced rule thickness.

2. Longitudinal strength

Maximum permissible reduction of midship section modulus: 10% is to be taken from requirement given in Rules for Hull (Pt.1, Vol.II) Sec.5.C.1 and Sec.5.C.2, whichever is the greater.

3. Local strength

Maximum permissible large surface reduction of plate thickness and web thickness of profiles: t_k

for $t \leq 11{,}5$ mm: $t_k = 1{,}5$ mm

for $t > 11{,}5$ mm: $t_k = 0{,}09 \cdot t + 0{,}45$ mm, max. 3,0 mm

t = plate and/or web thickness in [mm], as stipulated in the Construction Rules.

Maximum permissible locally limited reduction of thickness: 0,2t.

In ballast tanks in way of 1,5 m below the weather deck, if the weather deck is the tank deck:

$t_k = 2{,}5$ mm

In cargo oil tanks in way of 1,5 m below the weather deck, if the weather deck is the tank deck and for horizontal structural elements in cargo oil and fuel tanks: $t_k = 2{,}0$ mm.

In dry cells, such as fore to aft passageways of container ships and comparable spaces, and for hatch covers of dry cargo hold:

for $t \leq 11{,}5$ mm: $t_k = 1{,}0$ mm

for $t > 11{,}5$ mm: $t_k = 0{,}09 \cdot t$, max. 2.5 mm

Maximum permissible surface reduction of the side shell in way of the ice belt: 2,0 mm.

4. Anchor equipment

For anchors, reduction of weight shall not exceed 10%. For chain cables, reduction of the mean diameter shall not exceed 12%.

5. Hatch covers and hatch coaming

5.1.1 Corrosion additions for hatch cover and hatch coaming are in accordance with Rules for Hull (Pt.1, Vol. II), Table 17.1.

5.1.2 Steel renewal is required where the gauged thickness is less than t_{net} + 0,5 mm for:

— single skin hatch covers,

— the plating of double skin hatch covers, and

— coaming structures the corrosion additions tK of which are provided in Rules for Hull (Pt.1, Vol. II), Table 17.1.

5.1.3 Where the gauged thickness is within the range t_{net} + 0,5 mm and t_{net} + 1,0 mm, coating (applied in accordance with the coating manufacturer's requirements) or annual gauging may be adopted as an alternative to steel renewal. Coating is to be maintained in GOOD condition, as defined in Annex A.7.

5.1.4 For the internal structure of double skin hatch covers, thickness gauging is required when hatch cover top or bottom plating renewal is to be carried out or when this is deemed necessary, at the discretion of Surveyor, on the basis of the plating corrosion or deformation condition. In these cases, steel renewal for the internal structures is required where the gauged thickness is less than t_{net}.

5.1.5 For corrosion addition t_K = 1,0 mm the thickness for steel renewal is t_{net} and the thickness for coating or annual gauging is when gauged thickness is between t_{net} and t_{net} + 0,5 mm.

5.1.6 For coaming structures, the corrosion additions tK of which are not provided in Rules for Hull (Pt.1, Vol. II), Table 17.1, steel renewal and coating or annual gauging are to be in accordance with BKI requirements.

6. Transverse corrugated watertight bulkheads built in accordance Rules for Hull (Pt.1, Vol.II), Section 23, E and J (IACS UR S18 and S19)

6.1 For bulk carriers of 150 m in length and upwards, contracted for construction on or after 1 July 1998 and carrying solid bulk cargoes having a density of 1.0 t/m^3 and above, Steel renewal is required where the gauged thickness is less than t_{net} + 0.5 mm. Where the gauged thickness is within the range t_{net} + 0.5 mm and t_{net} + 1.0 mm, coating (applied in accordance with the coating manufacturer's requirements) or annual gauging may be adopted as an alternative to steel renewal.

The corrosion addition t_k is to be taken equal to 3.5 mm.

6.2 For the following bulk carriers of 150 m in length and upwards and carrying solid bulk cargoes having a density of 1.78 t/m^3 and above, steel renewal for the gauged thickness of transverse watertight corrugated bulkheads between cargo holds Nos.1 and 2, according to Annex B.6.5:

1) Bulk carriers contracted for construction before 1 July 1998 and not complying with Rules for Hull (Pt.1, Vol.II) Sec.23.E;

2) Bulk carriers the keels of which were laid or which were at a similar stage of construction before 1 July 1999 and not complying with Rules for Hull (Pt.1, Vol.II) Sec.23.E.

A.4 Class Requirements of Laid-Up Ships

A. General

1. Vessels which are laid up before surveys due to be overdue, shall submit Lay-up Application attached with "Lay-up Maintenance Program" to BKI for inspection and approval. The lay-up maintenance program includes:

1.1 The safety conditions to be kept throughout the lay-up period

1.2 The measures taken to preserve the maintenance of the ship throughout the lay-up period

1.3 The survey requirements to be complied with for lay-up, maintenance of class in lay-up and re-commissioning.

B. Safety conditions

1. Power supply

Adequate power supply is to be supplied, or readily available, all around the clock (24 hours), either from independent means on board the ship or from shore.

2. Manning

Watch personnel are to be provided. The number of the watch personnel will depend on the size of the ship, the lay-up site and mooring arrangements, the shore assistance available in case of fire, leakage or flooding. A permanent shore communication installation (radio, telephone) is also to be available.

3. Fire protection and fire fighting

Fire protection and fire-fighting either fixed or portable shall be working order and in operation, and automatic fire alarm systems, where provided, are to be in working order and in operation.

4. Protection against explosion

Cargo spaces and piping systems are to be cleaned and ventilated to prevent gas from forming any pockets.

An inert gas system in operation is recommended for the cargo spaces of oil and chemical tankers.

All flammable materials, sludge, etc. are to be removed from the ship's bilge, tank tops, double bottom tanks, engine room, pump rooms and similar spaces.Hot work is not being carried out during lay-up, unless special precautionary measures are taken.

5. Safety equipment

All the equipment usually recommended for the safety of the watch personnel is to be provided, kept in working order and tested regularly.

The usual life-saving equipment such as liferafts, life-buoys, breathing apparatus, oxygen masks and distress signals is to be provided and made accessible.

The requirements of the flag Administration and of the local port authorities of the lay-up site are usually to be applied.

6. Emergency power

The emergency source of power, emergency generator and/or emergency air compressor are to be kept in working order and tested weekly.

C. Preservation measures for lay-up and maintenance

1. A lay-up log-book is to be kept on board, in which the maintenance work and tests carried out during the layup period are to be entered with the corresponding dates. The nature and frequency of the maintenance, inspections and tests are also to be defined in the lay-up log book.

The following measures for preservation and maintenance during the lay-up period are to be taken by Owners according to the type of ship, hull equipment, machinery installations and the specific cases of lay-up conditions.

2. Exposed parts of the hull

2.1 Underwater parts of the hull are to be protected against corrosion. It is advisable to provide an impressed current cathodic protection system where the quantity of corrosive waste discharge is particularly high. When such systems are provided, they are to be serviced and checked at regular intervals. The condition of sacrificial anodes is to be evaluated at the annual lay-up condition surveys.

2.2 The coating of the hull above the waterline, exposed decks, access doors or covers on exposed decks, and hatch covers is to be maintained in satisfactory condition.

All accesses leading to internal spaces are to be kept closed.

All vent pipes and ventilation trunks are to be kept closed.

3. Internal spaces

3.1 Cargo tanks and cargo holds are to be emptied, cleaned and kept dry.

Ballast tanks are to be kept either full or empty. When ballast spaces are kept filled with sea water, special care is to be taken to keep such spaces topped up and protected against corrosion. When provided, sacrificial anodes are to be renewed when deemed necessary. The topping up is to be regularly verified.

3.2 Chain lockers are to be drained, cleaned and kept dry. Coating with bituminous paint is recommended.

3.3 Fuel oil and lubricating oil tanks are to be drained regularly.

Lubricating oil analysis is to be performed regularly and the oil renewed when the result is not satisfactory. Prior to being refilled, tanks are to be cleaned.

Empty lubricating oil tanks are to be cleaned and kept dry.

Fresh water or distilled water tanks are to be kept full or empty. Empty tanks are to be cleaned and kept dry. Where cement wash is used as a coating, this is to be examined and, if necessary, repaired prior to filling.

3.3.1 The bilge and tank top in engine rooms are to be cleaned and kept dry.

Hull sea inlet and outlet valves not in use are to be kept closed.

3.4 Deck fittings

3.4.1 The windlass, capstans and winches are to be regularly greased and turned once a week.

All wire cables are to be kept greased.

Visible parts of chains are to be coal-tarred and examined regularly.

Chocks and hawse pipes are to be coated with bituminous paint or equivalent if deemed necessary.

Cargo piping on deck is to be drained, blown through if deemed necessary and kept dry by opening up drains.

Electrical machinery and navigational equipment are to be protected by watertight covers.

3.5 Machinery

3.5.1 Machinery - General

Exposed mechanical parts of machinery are to be greased.

All rotating machinery such as diesel engines, reciprocating engines, pumps, turbines, electric motors and generators are to be turned at regular intervals with a limited number of revolutions (the lubricating oil system should be put in operation or proper priming applied). Units are not to be stopped in the same position as the previous one.

3.5.2 Reduction gears

For large reduction gears, a fan activating the circulation of hot air in closed circuit with air hoses is to be fitted (intake at lower part of casing and discharge at upper part).

3.5.3 Auxiliary turbine-driven machinery

Stators are to be drained and kept dry.

Shaft sealing glands are to be lubricated.

Lubricating oil is to be analysed and renewed when deemed necessary. Prior to oil renewal, the oil casings are to be cleaned.

Exhaust steam pipes are to be kept dry.

Stuffing boxes are to be dismantled.

Turbines are to be turned weekly an integer number of revolutions plus one quarter of a revolution.

3.5.4 Condensers and heat exchangers

Condensers and heat exchangers are to be drained and kept dry.

Desiccant is to be placed in steam spaces.

Water sides are to be washed with fresh water.

The condition of the zinc anodes is to be periodically checked.

When tubes are fitted with plastic or fibre packing, water sides are to be filled with alkaline distilled water.

When tubes are expanded or fitted with metal packing, water sides are to be provided with desiccants and kept dry.

3.5.5 Auxiliary machinery

Air receivers are to be drained, opened up and cleaned.

Pressure relief valves are to be cleaned and slightly lubricated.

Air compressor crankcases are to be drained, cleaned and refilled with clean oil. Cylinders and valves are to be lubricated. Coolers are to be drained and dried. Air drains are to be opened and the system dried.

Air start lines are to be drained and dried.

De-aerators are to be drained and dried.

Feed pumps and extraction pumps are to be drained and dried.

Air ejectors are to be drained and dried.

Main circulation pumps are to be drained and dried.

Evaporators are to be drained, cleaned and dried.

3.5.6 Piping

Pipes not in use are to be drained and kept dry.

3.5.7 Diesel engines

Daily tank fuel oil outlet pipes and all injection equipment are to be filled with filtered gas oil.

Fresh water circuits are to be filled with water mixed with rust inhibitors. Fresh water pH is to be checked monthly.

Oil of hydraulic regulators is to be replaced.

Sea water cooling pipes are to be drained.

Crankcases are to be provided with desiccant.

Starting valves are to be lubricated (internally and externally).

Motor oil is to be sprayed in cylinders and on all external parts liable to corrosion.

Cams and cylinders are to be motor oil sprayed monthly.

Turbo-compressor/charger ball bearings are to be oil sprayed and rotated for an integer number of revolutions plus one quarter of a revolution.

Engine air inlets and exhaust gas pipes are to be sealed.

Scavenge spaces are to be cleaned

Engines are to be turned weekly.

3.5.8 Shaft lines

Shaft lines are to be coated with grease.

Shaft bearing cooling pipes are to be drained.

For sea water lubricated propeller shafts, the packing gland of the engine room stuffing box is to be tightened.

For oil lubricated sterntubes, lubricating oil is to be analysed and renewed if not satisfactory. The oil level in the tank is to be verified regularly.

Propeller shaft lines are to be rotated an integer number of revolutions plus one quarter of a revolution.

3.6 Electrical installations

3.6.1 Main and secondary switchboards, sub-feeder panels, fuse panels and starters are to be made tight. Desiccant is to be provided.

Contacts of relays, breakers and switch-breakers are to be coated with neutral vaseline.

Bearings of generators are to be cleaned of old grease and protected with new oil or grease.

Carbon brushes are to be lifted off their commutations.

3.6.2 Electrical insulation of each item is to be kept at a minimum 200000 Ω and general insulation is to be not less than 50000 Ω. Local electric heating may be necessary to improve the level of insulation, particularly in the generators/ alternators and large motors.

A megger test is to be performed regularly.

3.7 Steering gear

3.7.1 Exposed mechanical parts are to be greased or oil sprayed. For electrical parts the same preservation measures given in 3.6 are to be taken.

It is recommended that the steering gear should be operated monthly.

3.8 Boilers

3.8.1 Smoke sides of boilers are to be swept, washed clean with basic hot water and hot air dried.

3.8.2 Water and steam sides should preferably be preserved using the dry method, keeping the moisture at the lowest possible level, the ideal level being between 30% and 35%. It is advisable to ensure that no residual water remains to cause rapid corrosion. Drum doors are to be kept closed.

In other cases, it is advisable to keep the boilers, superheaters and economisers filled with water having a pH around 10,5. Hydrazine hydrate treatment of the water is preferable to reduce risks of corrosion caused by dissolved oxygen.

The water is to be regularly analysed.

3.8.3 Air heaters are to be cleaned and kept dry.

Uptake, shell and fan outlets are to be cleaned and kept closed with watertight hoods.

Burners are to be dismantled, and atomisers greased.

Desiccant is to be provided in furnaces where deemed necessary.

Expansion arrangements (sliding feet) are to be suitably greased.

The internal condition of boilers is to be checked every three months.

3.8.4 Boilers may also be preserved sealed with inert gas (nitrogen), provided that cocks and valves are tight and the installation allows an internal pressure of at least 0,05 bar to be maintained to prevent air penetration. Regular checks of the overpressure are to be carried out and results recorded in the log-book.

3.9 Automation equipment

3.9.1 Recommendations for electronic components are the same as those given for electrical installations.

For pneumatic parts the manufacturers' recommendations are to be followed and the system is to be checked regularly.

Pressure, temperature or level sensors are generally not affected by damage when not used. However, when available, the manufacturers' recommendations are to be followed.

4. Lay-up site and mooring arrangements

4.1 The choice and suitability of the lay-up site, as well as the type of mooring conditions, the mooring arrangements and their efficiency during the lay-up period remain the responsibility of the Owner. However, at the Owner's request, the mooring arrangement may be reviewed by BKI.

4.2 Recommendations for the lay-up site

4.2.1 The following recommendations are to be considered by Owners regarding the choice and suitability of the lay-up site.

The site should be:

— sheltered from open sea, strong currents and waves

— not exposed to whirling winds or turbulent tidal waves

— not exposed to moving ice

— clear of corrosive waste waters

— provided with adequate ship/shore communications.

4.3 Recommendations for the mooring arrangements

4.3.1 The following recommendations are to be considered by Owners with respect to the mooring arrangements:

— ground holding should be adequate

— vessels laid-up to buoys or anchored should be moored in such a way as to be prevented from swinging with normal wind and tidal changes

— chain cables should not be subject to cross-contact or twisting and stern anchorage should generally be provided.

— laid-up ships should be in ballast condition in order to reduce the effects of wind. Due consideration should be given to the still water bending moment. For guidance, normal ballast draft should be roughly between 30% and 50% of the maximum draft.

4.3.2 Ships should normally be moored singly. However, when several ships are moored together, the following provisions are to be made:

— ships are to be moored bow to stern

— ships are to be of approximately the same size

— the number of ships moored together is, in principle, not to exceed six

— breast-lines are to be of similar elasticity

— fenders are to be provided.

4.4 Review of the mooring arrangements

4.4.1 At the Owners' request, the mooring arrangements may be reviewed by BKI.

4.4.2 The proposal for the mooring arrangements is in such case to be submitted by the Owner and is to include the following information.

.1 Mooring site:

— geographical area (to be specified on a map)

— characteristics of the sea bottom

— water depth

— preferential angular sectors (effects of wind/tide/current) indicated according to statistical studies

— wave characteristics (amplitude, periods)

.2 Geometry of mooring arrangements:

— ship's position and direction

— shore anchorage

— diagram showing mooring equipment (fore and aft)

— angle between chain cables and ship's centreline

.3 Characteristics of mooring equipment:

— maximum holding strength of each anchor

— type of mooring lines (chains, cables, sinkers, etc.)

— length of each section

— weight of each section

— mechanical characteristics of each section (breaking load)

— weight of sinkers.

4.4.3 On completion of the installation, the mooring arrangements are to be inspected by BKI. When the ship is anchored, the underwater installation is to be inspected by a diver whose report is to be presented to BKI.

4.4.4 It is the responsibility of the Owners to ascertain the efficiency of the mooring arrangements during the lay-up period. The mooring arrangements are to be re-examined at regular intervals (at least each year when the ship is anchored) and when abnormal weather conditions occur at the lay-up site.

A.5 Survey of Watertight Cable Transits

A. General

1. Application

1.1 These requirements apply to all ships contracted for construction on or after 1st July 2021 and are in addition to the requirements of Section 3, B.1.1 and B.1.3 and Annex A.2.

1.2 Watertight cable transits are to be installed and maintained in accordance with the manufacturer's requirements and in accordance with the requirements of the relevant Type Approval certification.

1.3 Watertight cable transit seal systems should be inspected in accordance with Table A.2.1 item 8.6.

B. Cable Transit Seal Systems Register

1. New Construction

1.1 A Cable Transit Seal Systems Register (Register) is to be provided by the shipbuilder for all watertight cable transits fitted to the ship. For an example of a register see Table A.5.1. The Register can be in either a hard copy or digitized media. It is to include a marking / identification system, documentation referencing manufacturer manual(s) for each type of cable transit installed, the Type Approval certification for each type of transit system, applicable installation drawings, and a recording of each installed transit documenting the as built condition after final inspection in the shipyard. It is to include sections to record any inspection, modification, repair and maintenance.

1.2 The Register shall be reviewed by the attending Surveyor to confirm it contains a list of the watertight cable transits, applicable cable transit information and sections to maintain in-service maintenance and survey records.

1.3 For manned ships the Register is to be held onboard of the ship. For unmanned ships, if a suitable storage location does not exist onboard, the Register may be held ashore. The Register is to be readily available for the attending surveyor.

Table A.5.1 Recommendatory Sample-Cable Transit Seal System Register

Name of Ship :	**Sample**
IMO No. :	**12345**
Place :	**Hamburg**
Date :	**XX/XX/2017**
Inspected by :	**Smith**

Transits 4
Total Openings 4

TRANSIT			Inspected side		BRAND	FRAME		Type Approved	CONDITION (G.F.P)	INSPECTED	REPAIRED	MODIFIED	MAINTAINED	NOTES : C = Compound (not known brand) R = Smith Blocks B = MCT Williams H = Heavy corrosion N = Nelson, Terasaki MB = Mixed brands MM = Mixed module sizes NVD = No Visible Defects CPA = Checkpoints rectangular frames CPB = Checkpoints round frames	CHECKED BY	DATE
Drawing number	ID	Location	F	B		Type	Opening number									
GIA-07-1047-000-883	TT-MCT-011				C	d=50	X							NVD	PTO	26/02/2015
GIA-07-1047-000-883	TT-MCT-012				C	450x200	X							NVD	PTO	26/02/2015
GIA-07-1047-000-883	TT-MCT-013				C	550x200	X							NVD	PTO	26/02/2015
GIA-07-1047-000-883	TT-MCT-014				C	750x200	X							Open, drilled hole not closed	PTO	26/02/2015

2. Ships in Service

2.1 The owner is to maintain the Register to record any disruption (repair, modification or opening out and closing) to a cable transit or to record the installation of a new cable transit.

C. Installation and Maintenance of Watertight Cable Transits

1. At new construction and periodic surveys it is to be confirmed that:

— Cable transits have been installed, and where disrupted have been reinstated, in accordance with the manufacturer's requirements and in accordance with the requirements of Type Approval.

— Where specified, appropriate specialized tools have been used.

A.6 Testing Procedures of Watertight Compartments

A. General

1. Testing to confirm the watertightness of tanks and watertight boundaries and the structural adequacy of tanks which form the watertight subdivisions[5] of ships is to be completed. Verification of the weathertightness of structures and shipboard outfitting is to be carried out. The tightness of all tanks and tight boundaries of new ships and those tanks and boundaries whose structural integrity is affected by major conversions or major repairs[6] is to be confirmed prior to the delivery of the ship or prior to the completion of the modification or repair as relevant.

2. Testing procedures of watertight compartments for ships built in compliance with SOLAS 1974 as amended (including ships which are to comply with the requirements Rules for Bulk Carrier and Oil Tanker (Pt.1, Vol.XVII)) are to be carried out in accordance with B., unless:

1) The shipyard provides documentary evidence of the Owner's agreement to a request to the Flag Administration for an exemption from the application of Chapter II-1, Regulation 11 of SOLAS 1974 as amended, or for an equivalency agreeing that the content of C. is equivalent to Chapter II-1, Regulation 11 of SOLAS 1974 as amended; and

2) The above-mentioned exemption/equivalency has been granted by the responsible Flag Administration.

3. Testing procedures of watertight compartments are to be carried out in accordance with C. for ships not built in compliance with SOLAS 1974 as amended (SOLAS ships (including ships which are to comply with the requirements Rules for Bulk Carrier and Oil Tanker (Pt.1, Vol.XVII))) and those ships built in compliance with SOLAS 1974 as amended (SOLAS ships) for which:

1) The shipyard provides documentary evidence of the Owner's agreement to a request to the Flag Administration for an exemption from the application of Chapter II-1, Regulation 11 of SOLAS 1974 as amended, or for an equivalency agreeing that the content of C. is equivalent to Chapter II-1, Regulation 11 of SOLAS 1974 as amended; and

2) The above-mentioned exemption/equivalency has been granted by the responsible Flag Administration.

4. Testing procedures of watertight compartments are to be carried out in accordance with D for non-SOLAS ships, see SOLAS Chapter I, Regulation 1 and Regulation 3.

B. SOLAS Ships (Ships Built in Compliance with SOLAS 1974 as Amended)

1. Application

1.1 All gravity tanks[7] and other boundaries required to be watertight or weathertight are to be tested in accordance with this Procedure and proven to be tight and structurally adequate as follows:

— Gravity Tanks for their tightness and structural adequacy,

— Watertight Boundaries Other Than Tank Boundaries for their watertightness, and

— Weathertight Boundaries for their weathertightness

1.2 The testing of cargo containment systems of liquefied gas carriers is to be in accordance with the testing requirements in Rules for Ships Carrying Liquefied Gases in Bulk (Pt.1, Vol.IX), Sec. 4, E.4.21 to E.4.26 will apply.

[5] Watertight subdivision means the transverse and longitudinal subdivisions of the ship required to satisfy the subdivision requirements of SOLAS Chapter II-1.

[6] Major repair means a repair affecting structural integrity.

[7] Gravity tank means a tank that is subject to vapour pressure not greater than 70 kPa.

1.3 The testing of structures not listed in Table A.6.1 or Table A.6.2 is to be specially considered.

2. Test Types and Definitions

2.1 The following two types of tests are specified in this requirement:

2.1.1 Structural Test

A test to verify the structural adequacy of tank construction. This may be a hydrostatic test or, where the situation warrants, a hydropneumatic test.

2.1.2 Leak Test

A test to verify the tightness of a boundary. Unless a specific test is indicated, this may be a hydrostatic/hydropneumatic test or an air test. A hose test may be considered an acceptable form of leak test for certain boundaries, as indicated by footnote 3 of Table A.6.1

2.2 The definition of each test type is as follows:

Hydrostatic test: (Leak and Structural)	A test wherein a space is filled with a liquid to a specified head.
Hydropneumatic test: (Leak and Structural)	A test combining a hydrostatic test and an air test, wherein a space is partially filled with a liquid and pressurized with air.
Hose Test: (Leak)	A test to verify the tightness of a joint by a jet of water with the joint visible from the opposite side.
Air Test: (Leak)	A test to verify tightness by means of air pressure differential and leak indicating solution. It includes tank air test and joint air tests, such as compressed air fillet weld tests and vacuum box tests.
Compressed Air Fillet Weld Test: (Leak)	An air test of fillet welded tee joints wherein leak indicating solution is applied on fillet welds.
Vacuum Box Test: (Leak)	A box over a joint with leak indicating solution applied on the welds. A vacuum is created inside the box to detect any leaks.
Ultrasonic Test: (Leak)	A test to verify the tightness of the sealing of closing devices such as hatch covers by means of ultrasonic detection techniques.
Penetration Test: (Leak)	A test to verify that no visual dye penetrant indications of potential continuous leakages exist in the boundaries of a compartment by means of low surface tension liquids (i.e. dye penetrant test).

2.3 The "top of the overflow" is defined as being the top of any overflow system which is used to prevent overfilling of a tank. Such system can be an overflow pipe, airpipe, intermediate tank. For gravity tanks (i.e. sewage, grey water and similar tanks, not filled with pumps) the top of the overflow is to be taken as the highest point of the filling line.

Note:

Gauging devices are not considered equivalent to an overflow system with the exception of fuel oil overflow tanks not intended to hold fuel which have been fitted with a level alarm.

Where a tank is fitted with multiple means of preventing overfilling, the decision on which overflow system is to be used to determine the test head is to be based on the highest point to which the liquid may rise in service.

3. Test Procedures

3.1 General

Tests are to be carried out in the presence of a Surveyor at a stage sufficiently close to the completion of work with all hatches, doors, windows, etc. installed and all penetrations including pipe connections fitted, and before any ceiling and cement work is applied over the joints. Specific test requirements are given in 3.4 and Table A.6.1. For the timing of the application of coating and the provision of safe access to joints, see 3.5, 3.6 and Table A.6.3.

3.2 Structural test procedures

3.2.1 Type and time of test

Where a structural test is specified in Table A.6.1 or Table A.6.2, a hydrostatic test in accordance with 3.4.1 will be acceptable. Where practical limitations (strength of building berth, light density of liquid, etc.) prevent the performance of a hydrostatic test, a hydropneumatic test in accordance with 3.4.2 may be accepted instead.

A hydrostatic test or hydropneumatic test for the confirmation of structural adequacy may be carried out while the ship is afloat, provided the results of a leak test are confirmed to be satisfactory before the ship is afloat. Alternative equivalent tank testing procedures may be considered for tanks which are constructed

from composite materials such as glass reinforced plastic (GRP) and fibre reinforced plastic (FRP) based on the recommendations of the composite manufacturer.

3.2.2 Testing Schedule for New Construction or Major Structural Conversion

1) Tanks which are intended to hold liquids, and which form part of the watertight subdivision of the ship, shall be tested for tightness and structural strength as indicated in Table A.6.1 and Table A.6.2.

2) The tank boundaries are to be tested from at least one side. The tanks for structural test are to be selected so that all representative structural members are tested for the expected tension and compression.

3) The watertight boundaries of spaces other than tanks for structural testing may be exempted, provided that the water-tightness of boundaries of exempted spaces is verified by leak tests and inspections. Structural testing may not be exempted and the requirements for structural testing of tanks in 1) to 2) shall apply, for ballast holds, chain lockers and a representative cargo hold if intended for in-port ballasting.

4) Tanks which do not form part of the watertight subdivision of the ship1, may be exempted from structural testing provided that the water-tightness of boundaries of exempted spaces is verified by leak tests and inspections.

3.3 Leak test procedures

For the leak tests specified in Table A.6.1, tank air tests, compressed air fillet weld tests, vacuum box tests in accordance with 3.4.4 through 3.4.6, or their combination, will be acceptable. Hydrostatic or hydropneumatic tests may also be accepted as leak tests provided that 3.5, 3.6 and 3.7 are complied with. Hose tests will also be acceptable for such locations as specified in Table A.6.1, Footnote 3, in accordance with 3.4.3.

The application of the leak test for each type of welded joint is specified in Table A.6.3.

Air tests of joints may be carried out in the block stage provided that all work on the block that may affect the tightness of a joint is completed before the test. See also 3.5.1 for the application of final coatings and 3.6 for the safe access to joints and the summary in Table A.6.3.

3.4 Test Methods

3.4.1 Hydrostatic test

Unless another liquid is approved, hydrostatic tests are to consist of filling the space with fresh water or sea water, whichever is appropriate for testing, to the level specified in Table A.6.1 or Table A.6.2. See also 3.7.

In cases where a tank is designed for cargo densities greater than sea water and testing is with fresh water or sea water, the testing pressure height is to simulate the actual loading for those greater cargo densities as far as practicable but the test pressure shall not exceed the maximum design internal pressure at the top of tank.

All external surfaces of the tested space are to be examined for structural distortion, bulging and buckling, other related damage and leaks.

3.4.2 Hydropneumatic test

Hydropneumatic tests, where approved, are to be such that the test condition, in conjunction with the approved liquid level and supplemental air pressure, will simulate the actual loading as far as practicable. The requirements and recommendations for tank air tests in 3.4.4 will also apply to hydropneumatic tests. See also 3.7.

All external surfaces of the tested space are to be examined for structural distortion, bulging and buckling, other related damage and leaks.

3.4.3 Hose test

Hose tests are to be carried out with the pressure in the hose nozzle maintained at least at 2 x 10^5 Pa during the test. The nozzle is to have a minimum inside diameter of 12 mm and be at a perpendicular distance from the joint not exceeding 1,5 m. The water jet is to impinge directly upon the weld. Where a hose test is not practical because of possible damage to machinery, electrical equipment insulation or outfitting items, it may be replaced by a careful visual examination of welded connections, supported where necessary by means such as a dye penetrant test or ultrasonic leak test or the equivalent.

3.4.4 Tank air test

All boundary welds, erection joints and penetrations, including pipe connections, are to be examined in accordance with approved procedure and under a stabilized pressure differential above atmospheric pressure not less than 0,15 x 10^5 Pa, with a leak indicating solution such as soapy water/detergent or a proprietary brand applied.

A U-tube with a height sufficient to hold a head of water corresponding to the required test pressure is to be arranged. The cross sectional area of the U-tube is not to be less than that of the pipe supplying air to the tank. Arrangements involving the use of two calibrated pressure gauges to verify the required test pressure may be accepted taking into account the provisions in F5.1 and F7.4 of Guidance for Marine Industry (Pt.1, Vol.AC) Sec.7 R-140, “Recommendation for Safe Precautions during Survey and Testing of Pressurized Systems”.

A double inspection is to be made of tested welds. The first is to be immediately upon applying the leak indication solution; the second is to be after approximately four or five minutes in order to detect those smaller leaks which may take time to appear.

3.4.5 Compressed air fillet weld test

In this air test, compressed air is injected from one end of a fillet welded joint and the pressure verified at the other end of the joint by a pressure gauge. Pressure gauges are to be arranged so that an air pressure of at least 0,15 x 10^5 Pa can be verified at each end of all passages within the portion being tested.

Note:
Where a leak test is required for fabrication involving partial penetration welds, a compressed air test is also to be applied in the same manner as to fillet weld where the root face is large, i.e., 6-8 mm.

3.4.6 Vacuum box test

A box (vacuum testing box) with air connections, gauges and an inspection window is placed over the joint with a leak indicating solution applied to the weld cap vicinity. The air within the box is removed by an ejector to create a vacuum of 0,20 x 10^5 – 0,26 x 10^5 Pa inside the box.

3.4.7 Ultrasonic test

An ultrasonic echo transmitter is to be arranged inside of a compartment and a receiver is to be arranged on the outside. The watertight/weathertight boundaries of the compartment are scanned with the receiver in order to detect an ultrasonic leak indication. A location where sound is detectable by the receiver indicates a leakage in the sealing of the compartment.

3.4.8 Penetration test

A test of butt welds or other weld joints uses the application of a low surface tension liquid at one side of a compartment boundary or structural arrangement. If no liquid is detected on the opposite sides of the boundaries after the expiration of a defined period of time, this indicates tightness of the boundaries. In certain cases, a developer solution may be painted or sprayed on the other side of the weld to aid leak detection.

3.4.9 Other test

Other methods of testing, except as provided in C., may be considered by BKI upon submission of full particulars prior to the commencement of testing.

3.5 Application of coating

3.5.1 Final coating

For butt joints welded by an automatic process, the final coating may be applied any time before the completion of a leak test of spaces bounded by the joints, provided that the welds have been carefully inspected visually to the satisfaction of the Surveyor.

Surveyors reserve the right to require a leak test prior to the application of final coating over automatic erection butt welds. For all other joints, the final coating is to be applied after the completion of the leak test of the joint. See also Table A.6.3.

3.5.2 Temporary coating

Any temporary coating which may conceal defects or leaks is to be applied at the time as specified for the final coating (see 3.5.1). This requirement does not apply to shop primer.

3.6 Safe access to joints

For leak tests, safe access to all joints under examination is to be provided. See also Table A.6.3.

3.7 Hydrostatic or hydropneumatic tightness test

In cases where the hydrostatic or hydropneumatic tests are applied instead of a specific leak test, examined boundaries must be dew-free, otherwise small leaks are not visible.

Table A.6.1 Test Requirements for Tanks and Boundaries

No.	Tank or boundary to be tested	Test type	Test head or pressure	Remarks
1	Double bottom tanks[4]	Leak and structural[1]	The greater of - top of the overflow[10], - to 2,4 m above top of tank[2], or - to bulkhead deck	
2	Double bottom voids[5]	Leak	See 3.4.4 through 3.4.6, as applicable	including pump room double bottom and bunker tank protection double hull required by MARPOL Annex I
3	Double side tanks	Leak and structural[1]	The greater of - top of the overflow[10], - to 2,4 m above top of tank[2], or - to bulkhead deck	
4	Double side voids	Leak	See 3.4.4 through 3.4.6, as applicable	
5	Deep tanks other than those listed elsewhere in this table	Leak and structural[1]	The greater of - top of the overflow[10], - to 2,4 m above top of tank[2]	
6	Cargo oil tanks	Leak and structural[1]	The greater of - top of the overflow[10], - to 2,4 m above top of tank[2], or - to top of tank[2] plus the design vapour pressure	
7	Ballast hold of bulk carriers	Leak and structural[1]	Top of cargo hatch coaming	
8	Peak tanks	Leak and structural[1]	The greater of - top of the overflow[10], - to 2,4 m above top of tank[2]	
9	.1 Fore peak spaces with equipment	Leak	See 3.4.3 through 3.4.6, as applicable	
	.2 Fore peak voids	Leak	See 3.4.4 through 3.4.6, as applicable	
	3. Aft peak spaces with equipment	Leak	See 3.4.3 through 3.4.6, as applicable	
	.4 Aft peak voids	Leak	See 3.4.4 through 3.4.6, as applicable	After peak to be tested after installation of stern tube
10	Cofferdams	Leak	See 3.4.4 through 3.4.6, as applicable	
11	.1 Watertight bulkheads	Leak[8]	See 3.4.3 through 3.4.6, as applicable	
	.2 Superstructure end bulkheads	Leak	See 3.4.3 through 3.4.6, as applicable	
	.3 Cable penetrations in watertight bulkheads	Hose	See 3.4.3	
12	Watertight doors below freeboard or bulkhead deck	Leak[6,7]	See 3.4.3 through 3.4.6, as applicable	
13	Double plate rudder blades	Leak	See 3.4.4 through 3.4.6, as applicable	
14	Shaft tunnels clear of deep tanks	Leak[3]	See 3.4.3 through 3.4.6, as applicable	

Table A.6.1: Test Requirements for Tanks and Boundaries *(continued)*

No.	Tank or boundary to be tested	Test type	Test head or pressure	Remarks
15	Shell doors	Leak[3]	See 3.4.3 through 3.4.6, as applicable	
16	Weathertight hatch covers and closing appliances	Leak[3,7]	See 3.4.3 through 3.4.6, as applicable	Hatch covers closed by tarpaulins and battens excluded
17	Dual purpose tanks/dry cargo hatch covers	Leak[3,7]	See 3.4.3 through 3.4.6, as applicable	In addition to structural test in item 6 or 7
18	Chain lockers	Leak and structural[1]	Top of chain pipe	
19	L.O. sump. tanks and other similar tanks/spaces under main engines	Leak[9]	See 3.4.3 through 3.4.6, as applicable	
20	Ballast ducts	Leak and structural[1]	The greater of: - ballast pump maximum pressure, or - relief valve	
21	Fuel Oil Tanks	Leak and structural[1]	The greater of: - top of the overflow[10], - to 2,4 m above top of tank[2], or - to top of tank[2] plus the design vapour pressure, or - to bulkhead deck	
22	Fuel oil overflow tanks not intended to hold fuel	Leak and structural[1]	The greater of: - top of the overflow[10], - to 2,4 m above top of tank[2], or - to bulkhead deck	
23	Azimuthing Pod	Leak	See 3.4.3 through 3.4.6, as applicable	

Notes:

1. *Refer to Sub-section 3.2.2*
2. *The top of a tank is the deck forming the top of the tank, excluding any hatchways.*
3. *Hose Test may also be considered as a medium of the test. See 2.2.*
4. *Including tanks arranged in accordance with the provisions of SOLAS regulation II-1/9.4.*
5. *Including duct keels and dry compartments arranged in accordance with the provisions of SOLAS regulation II-1/11.2 and II-1/9.4 respectively, and/or oil fuel tank protection and pump room bottom protection arranged in accordance with the provisions of MARPOL Annex I, Chapter 3, Part A regulation 12A and Chapter 4, Part A, regulation 22 respectively.*
6. *Where water tightness of a watertight door has not been confirmed by prototype test, testing by filling watertight spaces with water is to be carried out. See SOLAS regulation II-1/16.2 and MSC.1/Circ.1572/Rev.1*
7. *As an alternative to the hose testing,other testing methods listed in 3.4.7 through 3.4.9 may be applicable subject to adequacy of such testing methods being verified. See SOLAS regulation II-1/11.1. For watertight Bulkheads (item 11.1) alternatives to the hose testing may only be used wherea hose test is not practicable.*
8. *A "Leak and structural test",see 3.2.2 Is to be carried out for a representative cargo hold if intended for in-port ballasting. The Filling level requirement for testing cargo holds intended for in-port ballasting is to be the maximum loading that will occur in-port as indicated in the loading manual.*
9. *Where L.O. sump tanks and other similar spaces under main engines intended to hold liquid form part of the watertight subdivision of the ship, they are to be tested as per the requirements of Item 5, Deep tanks other than those listed elsewhere in this table.*
10. *Refer to 2.3*

Table A.6.2 Additional Test Requirements for Special Service Ships/Tanks

No.	Type of Ship/Tank	Structures to be tested	Type of Test	Test Head or Pressure	Remarks
1.	Liquefied gas carriers	Integral tanks	Leak and structural	Refer to Rules for Ships Carrying Liquefied Gases in Bulk (Pt.1, Vol.IX), Sec. 4, E.4.25	
		Hull structure supporting Membrane or semi-membrane tanks	Refer to Rules for Ships Carrying Liquefied Gases in Bulk (Pt.1, Vol.IX), Sec. 4, E.4.24	Refer to Rules for Ships Carrying Liquefied Gases in Bulk (Pt.1, Vol.IX), Sec. 4, E.4.24	
		Independent tanks type A	Refer to Rules for Ships Carrying Liquefied Gases in Bulk (Pt.1, Vol.IX), Sec. 4, E.4.21	Refer to Rules for Ships Carrying Liquefied Gases in Bulk (Pt.1, Vol.IX), Sec. 4, E.4.21	
		Independent tanks type B	Refer to Rules for Ships Carrying Liquefied Gases in Bulk (Pt.1, Vol.IX), Sec. 4, E.4.22	Refer to Rules for Ships Carrying Liquefied Gases in Bulk (Pt.1, Vol.IX), Sec. 4, E.4.22	
		Independent tanks type C	Refer to Rules for Ships Carrying Liquefied Gases in Bulk (Pt.1, Vol.IX), Sec. 4, E.4.23	Refer to Rules for Ships Carrying Liquefied Gases in Bulk (Pt.1, Vol.IX), Sec. 4, E.4.23	
2.	Edible liquid tanks	Independent tanks	Leak and Structural[1]	The greater of - top of the overflow, or - to 0,9 m above top of tank[2]	
3.	Chemical carriers	Integral or independent cargo tanks	Leak and structural[1]	The greater of - to 2,4 m above top of tank[2], or - to top of tank[2] plus the design vapour pressure	Where a cargo tank is designed for the carriage of cargoes with specific gravities larger than 1,0, see 3.4.1

Notes:
1 Refer to section 3.2.2
2 Top of tank is deck forming the top of the tank excluding any hatchways.

Table A.6.3 Application of Leak Test, Coating and Provision of Safe Access for Type of Welded Joints

Type of welded joints		Leak test	Coating[1]		Safe Access[2]	
			Before leak test	After leak test but before Structural test	Leak test	Structural test
Butt	Automatic	Not required	Allowed[3]	N/A	Not required	Not required
	Manual or Semi automatic[4]	Required	Not allowed	Allowed	Required	Not required
Fillet	Boundary including penetrations	Required	Not allowed	Allowed	Required	Not required

Notes:
1. Coating refers to internal (tank/hold coating), where applied, and external (shell/deck) painting. It does not refer to shop primer.
2. Temporary means of access for verification of the leak test.
3. The condition applies provided that the welds have been carefully inspected visually to the satisfaction of the Surveyor.
4. Flux Core Arc Welding (FCAW) semiautomatic butt welds need not be tested provided that careful visual inspections show continuous uniform weld profile shape, free from repairs, and the results of NDE testing show no significant defects.

C. SOLAS Exempt/ Equivalent Ships

1. Application

1.1 Testing procedures are to be carried out in accordance with the requirements of B. in association with the following alternative procedures of 3.2.2 "Testing Schedule for New Construction or Major Structural Conversion".

1.2 The tank boundaries are to be tested from at least one side. The tanks for structural test are to be selected so that all representative structural members are tested for the expected tension and compression.

1.3 Structural tests are to be carried out for at least one tank of a group of tanks having structural similarity (i.e. same design conditions, alike structural configurations with only minor localised differences determined to be acceptable by the attending Surveyor) on each ship provided all other tanks are tested for leaks by an air test. The acceptance of leak testing using an air test instead of a structural test does not apply to cargo space boundaries adjacent to other compartments in tankers and combination carriers or to the boundaries of tanks for segregated cargoes or pollutant cargoes in other types of ships.

1.4 Additional tanks may require structural testing if found necessary after the structural testing of the first tank.

1.5 For tanks which are less than 2 m^3 in volume, structural testing may be replaced by leak testing.

1.6 Where the structural adequacy of the tanks of a ship were verified by the structural testing required by either Table A.6.1 or C.1.3, subsequent ships in the series (i.e. sister ships built from the same plans at the same shipyard) may be exempted from structural testing of tanks, provided that:

1) Water-tightness of boundaries of all tanks and spaces are verified by leak tests and thorough inspections are carried out.

2) Structural testing is carried out for at least one tank or space of each type among all tanks/ spaces of each sister ship.

3) Additional tanks and spaces may require structural testing if found necessary after the structural testing of the first tank or if deemed necessary by the attending Surveyor.

For cargo space boundaries adjacent to other compartments in tankers and combination carriers or boundaries of tanks for segregated cargoes or pollutant cargoes in other types of ships, structural tests are to be carried out for at least one tank of a group of tanks having structural similarity (i.e. same design conditions, alike structural configurations with only minor localized differences determined to be acceptable by the attending Surveyor) on each vessel provided all other tanks are tested for leaks by an air test.

1.7 Sister ships built (i.e. keel laid) two years or more after the delivery of the last ship of the series, may be tested in accordance with 1.6 at the discretion of BKI, provided that:

1) General workmanship has been maintained (i.e. there has been no discontinuity of shipbuilding or significant changes in the construction methodology or technology at the yard, shipyard personnel are appropriately qualified and demonstrate an adequate level of workmanship as determined by BKI); and

2) An NDT plan is implemented and evaluated by BKI for the tanks not subject to structural tests. Shipbuilding quality standards for the hull structure during new construction are to be reviewed and agreed during the kick-off meeting. The work is to be carried out in accordance with the Rules and under survey of BKI.

D. Non-SOLAS Ships

1. Application

1.1 Testing procedures are to be carried out in accordance with the requirements of B in association with the following alternative procedures for B.3.2.2 "Testing Schedule for New Construction or Major Structural Conversion".

1.2 The tank boundaries are to be tested from at least one side. The tanks for structural test are to be selected so that all representative structural members are tested for the expected tension and compression.

1.3 The requirements given in Table A-6.1 to structurally test tanks to 2,4 metres above the top of the tank do not apply. Instead, the minimum test pressure for structural testing is to be taken as 0,3D + 0,76 metres above the top of the tank where the top of the tank is the deck forming the top of the tank, excluding any hatchways and D is the depth of the ship. The minimum test pressure need not be taken greater than 2,4 metres above the top of the tank.

1.4 Structural tests are to be carried out for at least one tank of a group of tanks having structural similarity (i.e. same design conditions, alike structural configurations with only minor localised differences determined to be acceptable by the attending Surveyor) on each vessel provided all other tanks are tested for leaks by an air test. The acceptance of leak testing using an air test instead of a structural test does not apply to cargo space boundaries adjacent to other compartments in tankers and combination carriers or the boundaries of tanks for segregated cargoes or pollutant cargoes in other types of ships.

1.5 Additional tanks may require structural testing if found necessary after the structural testing of the first tank.

1.6 For tanks which are less than 2 m^3 in volume, structural testing may be replaced by leak testing.

1.7 Where the structural adequacy of the tanks and spaces of a vessel were verified by the structural testing required by either B or D.1.4, subsequent vessels in the series (i.e. sister ships built from the same plans at the same shipyard) may be exempted from structural testing of tanks, provided that:

1) water-tightness of boundaries of all tanks and spaces are verified by leak tests and thorough inspections are carried out.

2) structural testing is carried out for at least one tank or space among all tanks/spaces of each sister vessel.

3) additional tanks and spaces may require structural testing if found necessary after the structural testing of the first tank or if deemed necessary by the attending Surveyor.

For cargo space boundaries adjacent to other compartments in tankers and combination carriers or boundaries of tanks for segregated cargoes or pollutant cargoes in other types of ships, structural tests are to be carried out for at least one tank of a group of tanks having structural similarity (i.e. same design conditions, alike structural configurations with only minor localised differences determined to be acceptable by the attending Surveyor) on each vessel provided all other tanks are tested for leaks by an air test.

1.8 Sister ships built (i.e. keel laid) two years or more after the delivery of the last ship of the series, may be tested in accordance with 1.7 at the discretion of BKI, provided that:

1) general workmanship has been maintained (i.e. there has been no discontinuity of shipbuilding or significant changes in the construction methodology or technology at the yard, shipyard personnel are appropriately qualified and demonstrate an adequate level of workmanship as determined by BKI); and

2) an NDT plan is implemented and evaluated by BKI for the tanks not subject to structural tests. Shipbuilding quality standards for the hull structure during new construction are to be reviewed and agreed during the kick-off meeting. The work is to be carried out in accordance with the Rules and under survey of BKI.

A.7 Definitions

Adequate means for protection against corrosion (Propeller and Tube Shaft)

An adequate means for protection against corrosion is an approved means for full protection of the core shaft against sea water intrusion and subsequent corrosion attack. Such means are used for the protection of common steel material against corrosion particularly in combination with water lubricated bearings. Typical means are for example:

— continuous metallic, corrosion resistant liners, continuous cladding,

— multiple layer synthetic coating,

— multiple layer of fiberglass,

— combinations of above mentioned,

— rubber / elastomer covering coating.

The means for protection against corrosion are installed / applied according to class approved procedures.

Air pipe head

Air pipe heads installed on the exposed decks are those extending above the freeboard deck or superstructure decks.

Alternative means (Propeller and Tube Shaft)

"Alternative Means: are shafting arrangements with configuration other than described in the present document."

Bulk Carrier

Ship which is constructed generally with single deck, double bottom, topside tanks and hopper side tanks in cargo spaces, and is intended primarily to carry dry cargo in bulk. Combination carriers are included. Ore and combination carriers are not covered by Rules for Bulk Carrier and Oil Tanker (Pt.1, Vol.XVII) .

The ship type notation "BULK CARRIER", or equivalent, and the notation "ESP" shall be assigned to sea going self-propelled ships[8)] which are constructed generally with single deck, double bottom, hopper side tanks and topside tanks and with single or double side skin construction in cargo length area and intended primarily to carry dry cargoes in bulk. Typical midship sections are given in Fig. A.7.1.

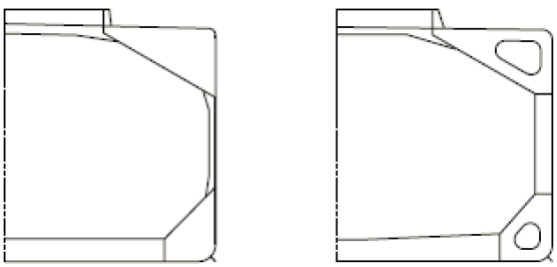

Fig. A.7.1 Typical midship section

Ballast Tank

A Ballast Tank is a tank that is being used primarily for salt water ballast.

Cargo Area

[8)] Self-propelled ships are ships with mechanical means of propulsion not requiring assistance from another ship during normal operation.

Cargo Area is that part of the ship which contains cargo tanks, slop tanks and cargo/ballast pump-rooms, cofferdams, ballast tanks and void spaces adjacent to cargo tanks and also deck areas throughout the entire length and breadth of the part of the ship over the above-mentioned spaces.

Cargo Length Area

Cargo Length Area is that part of the ship which includes cargo holds and adjacent areas including fuel tanks, cofferdams, ballast tanks and void spaces.

Close Loop (system) Oil Lubricated bearing (Propeller and Tube Shaft)

Closed loop oil lubricating systems use oil to lubricate the bearings and are sealed against the environment (seawater) by adequate sealing / gland devices.

Closed Loop System Fresh Water Lubricated Bearing (Propeller and Tube Shaft)

Closed loop water lubricating systems use fresh water to lubricate the bearings and are sealed against the environment (such as seawater) by adequate sealing / gland devices.

Chemical Tanker

A ship constructed or adapted and used for the carriage in bulk of any liquid product listed in Chapter 17 of the International Code for The Construction and Equipment of Ships Carrying Dangerous Chemicals in Bulk, IBC Code.

The ship type notation “CHEMICAL TANKER”, or equivalent, and the notation “ESP” shall be assigned to sea going self-propelled ships[8)] which are constructed generally with integral tanks and intended primarily to carry chemicals in bulk. This type notation shall be assigned to tankers of both single or double hull construction, as well as tankers with alternative structural arrangements. Typical midship sections are given in Fig. A.7.2.

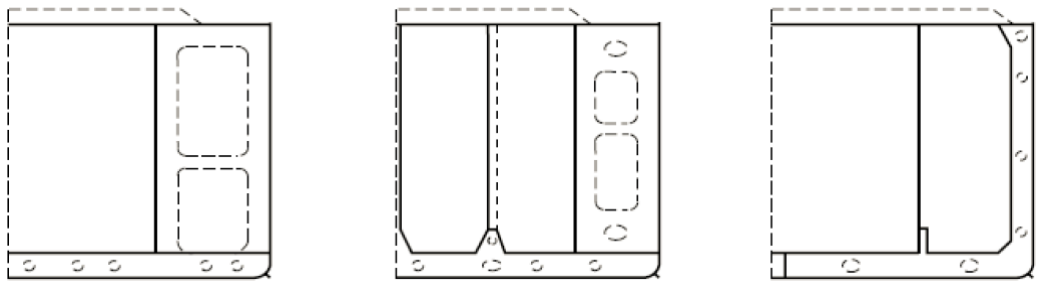

Fig. A.7.2 Typical midship section

Combination Carrier

1. “Combination carrier” is a general term applied to ships intended for the carriage of both oil and dry cargoes in bulk; these cargoes are not carried simultaneously, with the exception of oily mixture retained in slop tanks. The ship types defined in 2. and 3. below shall be considered to be combination carriers.

2. The ship type notation ”OIL/BULK/ORE (OBO) CARRIER”, or equivalent, and the notation ”ESP” shall be assigned to sea going self-propelled ships[8)] which are constructed generally with single deck, double bottom, hopper side tanks and topside tanks, and with single or double side skin construction in the cargo length area, and intended primarily to carry oil or dry cargoes, including ore, in bulk. Typical midship sections are given in Fig. A.7.3.

Note:
OIL/BULK/ORE carriers that do not comply with MARPOL I/19 may be subject to International and/or National Regulations requiring phase out.

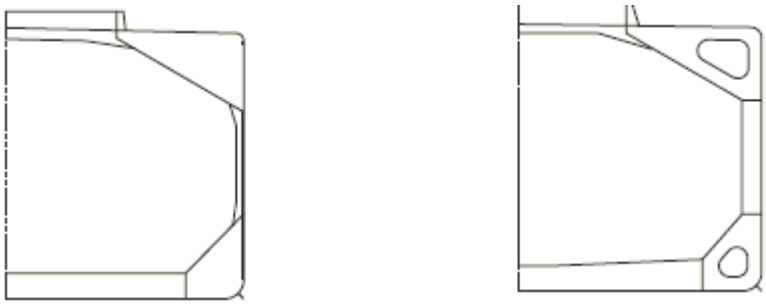

Fig. A.7.3 Typical midship section

3. The ship type notation 'ORE/OIL CARRIER", or equivalent, and the notation "ESP" shall be assigned to sea going self-propelled ships[8)] which are constructed generally with single deck, two longitudinal bulkheads and a double bottom throughout the cargo length area and intended primarily to carry ore cargoes in the centre holds or of oil cargoes in centre holds and wing tanks. Typical midship sections are given in Fig. A.7.4.

Note:
ORE/OIL carriers that do not comply with MARPOL I/19 may be subject to International and/or National Regulations requiring phase out.

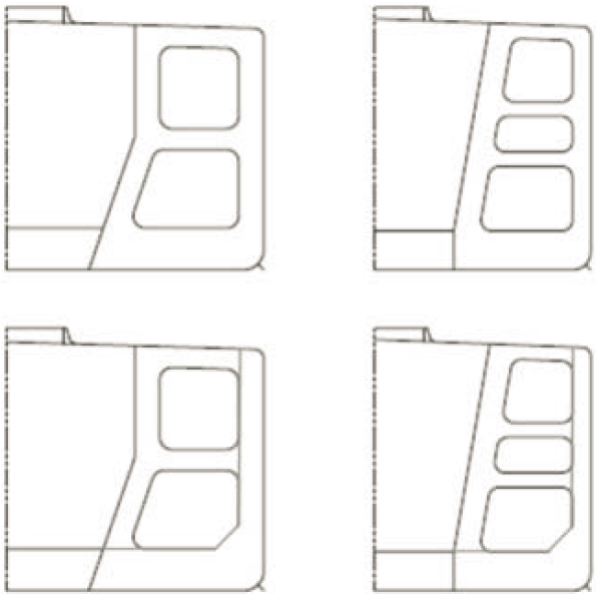

Fig. A.7.4 Typical midship section

Conditions of Class

Conditions of class mean requirements to the effect that specific measures, repairs, surveys etc. are to be carried out within a specific time limit in order to retain Classification.

Corrosion Prevention System

A Corrosion Prevention System is normally considered a full hard protective coating. Hard Protective Coating is usually to be epoxy coating or equivalent. Other coating systems, which are neither soft nor semi-hard coatings, may be considered acceptable as alternatives provided that they are applied and maintained in compliance with the manufacturer's specifications.

Corrosion Resistant Shaft (Propeller and Tube Shaft)

Corrosion resistant shaft is made in approved corrosion resistant steel as core material for the shaft.

Close Up Survey

A survey where the details of structural components are within the close visual inspection range of the surveyor, i.e. normally within reach of hand.

Coating Condition

Coating condition is defined as follows:

GOOD	condition with only minor spot rusting.
FAIR	condition with local breakdown at edges of stiffeners and weld connections and/or light rusting over 20% or more of areas under consideration, but less than as defined for POOR condition.
POOR	condition with general breakdown of coating over 20% or more of areas or hard scale at 10% or more of areas under consideration

Critical Structural Area

Locations which have been identified from calculations to require monitoring of from the service history of the subject ship or from similar ships or sister ships, if applicable, to be sensitive to cracking, buckling or corrosion which would impair the structural integrity of the ship.

Double class vessel

A vessel which is classed by two Societies and where each Society works as if it is the only Society classing the vessel, and does all surveys in accordance with its own requirements and schedule.

Double Hull Oil Tanker

A ship which is constructed primarily for the carriage of oil in bulk, which have the cargo tanks protected by a double hull which extends for the entire length of the cargo area, consisting of double sides and double bottom spaces for the carriage of water ballast or void spaces.

Double Skin Bulk Carrier

A ship which is constructed generally with single deck, double bottom, top-side tanks and hopper side tanks in cargo spaces, and is intended primarily to carry dry cargo in bulk, including such types as ore carriers and combination carriers, in which all cargo holds are bounded by a double-side skin (regardless of the width of the wing space). Ore and combination carriers are not covered by Rules for Bulk Carrier and Oil Tanker (Pt.1, Vol.XVII)

Dual class vessel

A vessel which is classed by two Societies between which there is a written agreement regarding sharing of work.

First Society

First Society' is a Society classing a vessel which, under request of the Owner, enters a double or dual class arrangement with another Society.

Flanged connection (Propeller and Tube Shaft)

Flanged connection is the coupling Methodology, between the shaft and the propeller, achieved by a flange, built in at the shaft aft end, bolted to propeller boss.

Fresh Water sample test (Propeller and Tube Shaft)

Fresh water sample test should be carried out at regular intervals not exceeding six (6) months. Samples are to be taken under service conditions and are to be representative of the water circulating within the stern tube. Analysis results are to be retained on board and made available to the surveyor.

At time of survey the sample for the test has to be taken at the presence of the surveyor. Fresh water sample test shall include the following parameters:

— chlorides content,

— pH value,

— presence of bearing particles or other particles (only for laboratory analysis, not required for tests carried out in presence of the surveyor).

Gaining Society

Means a Classification Society which accepts a vessel for its classification only after all overdue surveys; and overdue conditions of class previously issued against the vessel have been completed by or as specified by the losing Society.

Grooving Corrosion

Grooving corrosion is typically local material loss adjacent to weld joints along abutting stiffeners and at stiffener or plate butts or seams.

Keyless connection (Propeller and Tube Shaft)

Keyless connection is the forced coupling Methodology between the shaft and the propeller without a key achieved through interference fit of the propeller boss on the shaft tapered end.

Keyed connection (Propeller and Tube Shaft)

Keyed connection is the forced coupling Methodology between the shaft and the propeller with a key and keyway achieved through the interference fit of the propeller boss on the shaft tapered end.

Locking device

A device that locks a securing device in the closed position.

Losing society

Means the Classification Society from which class is being transferred. In the case of vessels classed by more than one Society, 'losing Society' means all Classification Societies from which class is being transferred.

Lubricating oil analysis (Propeller and Tube Shaft)

Lubricating oil analysis is to be carried out at regular intervals not exceeding six (6) months taking into account Guidance for Marine Industry (Pt.1, Vol.AC) Sec.2.R-36. The documentation on lubricating oil analysis is to be available on board. Oil samples, to be submitted for the analysis, should be taken under service conditions.

Ore carrier

The ship type notation "ORE CARRIER", or equivalent, and the notation "ESP" shall be assigned to sea going self-propelled ships[8)] which are constructed generally with single deck, two longitudinal bulkheads and a double bottom throughout the cargo length area and intended primarily to carry ore cargoes in the centre holds only. Typical midship section are given in Fig. A.7.5.

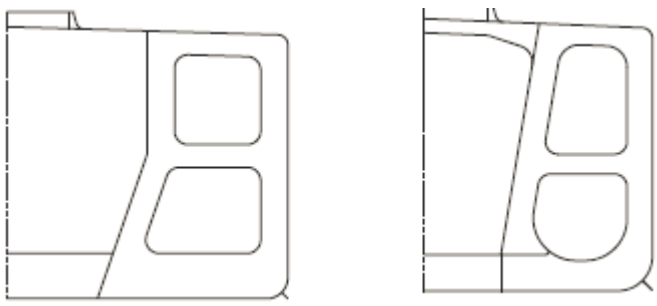

Fig. A.7.5 Typical midship section

Oil sample examination (Propeller and Tube Shaft)

An oil sample examination is a visual examination of the stern tube lubricating oil taken in presence of the surveyor with a focus on water contamination.

Oil Tanker

A ship which is constructed primarily to carry oil in bulk in cargo tanks forming an integral part of the ships /footnote hull, including ship types such as combination carriers (Ore/Oil ships etc.). but excluding ships carrying oil in independent tanks not part of the ship's hull such as asphalt carriers.

The ship type notation "OIL TANKER", or equivalent, and the notation "ESP" shall be assigned to sea going self-propelled ships[8)] which are constructed with integral cargo tanks and intended primarily to carry oil in bulk. This type notation shall be assigned to tankers of both single and double hull construction, as well as tankers with alternative structural arrangements, e.g. mid-deck designs. Typical midship sections are given in Fig. A.7.6.

Note:
OIL/BULK/ORE carriers that do not comply with MARPOL I/19 may be subject to International and/or National Regulations requiring phase out.

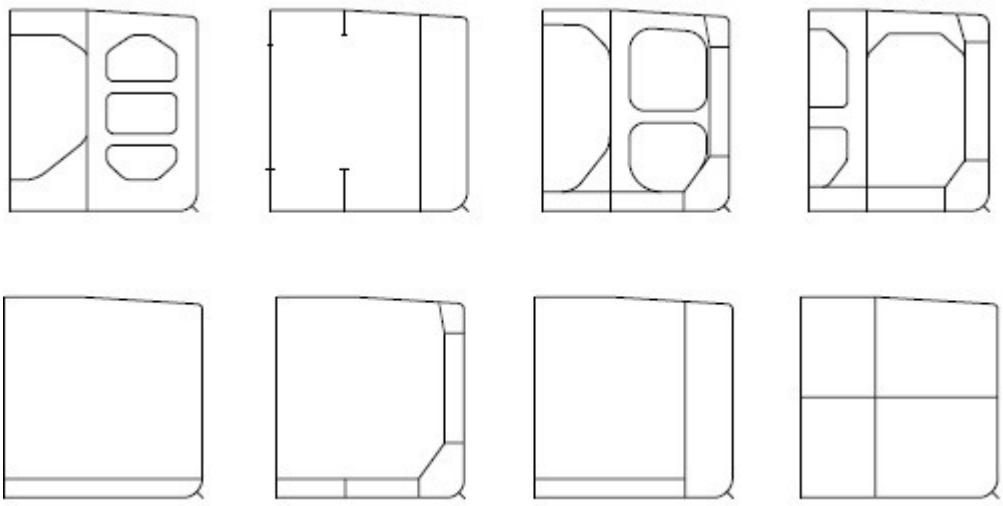

Fig. A.7.6 Typical midship section

Open Systems (water) (Propeller and Tube Shaft)

Open water lubricating systems use water to lubricate the bearings and are exposed to the environment.

Overall Survey

A survey intended to report on the overall condition of the hull structure and determine the extent of additional Close-up Surveys.

Outstanding

Outstanding means still to be dealt with.

Overdue

Overdue means overdue on the date the losing Society receives the request by the gaining Society for its current classification survey status.

Prompt and Thorough Repair

Permanent repair completed at the time of survey to the satisfaction of the surveyor, therein removing the need for the imposition of any associated condition of class.

Propeller Shaft (Propeller and Tube Shaft)

Propeller shaft is the part of the propulsion shaft to which the propeller is fitted. It may also be called screw shaft or tail shaft.

Representative Space

Those which are expected to reflect the condition of other Spaces of similar type and service and with similar corrosion prevention systems. When selecting Representative Spaces account is to be taken of the service and repair history on board and identifiable Critical Structural Areas and/or Suspect Areas.

Remaining Society

Remaining Society is a Society which keeps an existing vessel in class, when the class by the other Society involved in the double or dual class arrangement is suspended or withdrawn.

Remote Inspection Techniques (RIT)

Remote Inspection Technique is a means of survey that enables examination of any part of the structure without the need for direct physical access of the surveyor (refer to Guidance for Marine Industry (Pt.1, Vol.AC) Sec.3.R-42).

Renewal Thickness

The minimum allowable thickness, in mm, below which renewal of structural members is to be carried out.

Ro-Ro Ship

Ship is a ship fitted with which utilizes a loading ramp which to enables wheeled vehicles to be rolled-on and rolled-off the ship.

Ro-Ro passenger ship (Ro-Pax)

Passenger ship with Ro-Ro spaces or special category spaces.

Ro-Ro spaces

Ro-Ro spaces - spaces not normally sub-divided in any way and normally extending to either a substantial length or the entire length of the ship, in which motor vehicles with fuel in their tanks for their own propulsion and / or goods (packaged or in bulk, in or on rail or road cars, vehicles (including road or rail tankers), trailers, containers, pallets, demountable tanks or in or on similar stowage units or, other receptacles) can be loaded and unloaded normally in a horizontal direction.

Indonesian Safety regulation

Regulations issued by Indonesian Government as a flag State of the ships.

Second Society

Second Society is a Society which is requested by an Owner to accept an existing vessel already classed by another Society into its class under double or dual class arrangement.

Securing device

A device used to keep the door closed by preventing it from rotating about its hinges.

Self-Unloading Bulk Carriers

The ship type notation “SELF-UNLOADERS”, or equivalent, and the notation ”ESP” shall be assigned to sea going self-propelled ships[8)] which are constructed generally with single deck, double bottom, hopper side tanks and topside tanks and with single or double side skin construction in cargo length area and intended to carry and self-unload dry cargoes in bulk. Typical midship sections are given in Fig. A.7.7.

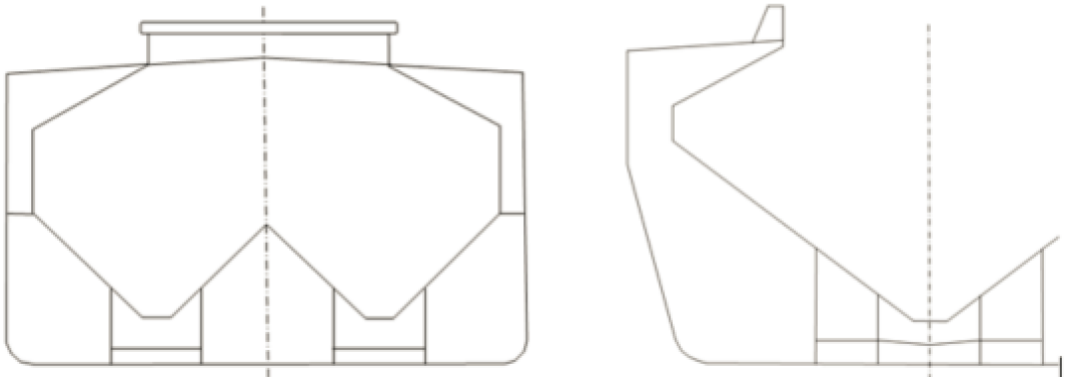

Fig. A.7.7 Typical midship sections

Spaces

Spaces are separate compartments including holds, tanks, cofferdams and void spaces bounding cargo holds, decks and the outer hull.

Special category spaces

Special category spaces - those enclosed vehicle spaces above or below the bulkhead deck, into and from which vehicles can be driven and to which passengers have access. Special category spaces may be accommodated on more than one deck provided that the total overall clear height for vehicles does not exceed 10m.

Service records (Propeller and Tube Shaft)

Service records are regularly recorded data showing in-service conditions of the shaft(s) and may include, as applicable: lubricating oil temperature, bearing temperature and oil consumption records (for oil lubricated bearings) or water flow, water temperature, salinity, pH, make-up water and water pressure (for closed loop fresh water lubricated bearings depending on design).

Shaft (Propeller and Tube Shaft)

For the purpose of this Unified Requirement shaft is a general definition that could mean:

— Propeller shaft

— Tube shaft

Special Consideration

Special Consideration or specially considered (in connection with close-up surveys and thickness measurements) means sufficient close-up inspection and thickness measurements are to be taken to confirm the actual average condition of the structure under the coating.

Stern tube (Propeller and Tube Shaft)

Tube or pipe fitted in the shell of a ship at the stern (or rear part of the ship), below the water- line, through which passes the tube shaft or aftermost section of the propeller-shaft.

Stern tube is the housing of the shaft bearings, generally two (one aft and one fore), that sustain the shaft and allows its rotation with less frictional resistance. The stern tube also accommodates the shaft sealing arrangement.

The definition does not include the intermediate shaft(s) which is (are) considered part of the propulsion shafting inside the vessel.

Stern tube Sealing System (Propeller and Tube Shaft)

Stern tube Sealing system is the equipment installed on the inboard extremity and, for closed systems, at outboard extremity of the stern tube.

Inboard Seal is the device fitted on the fore part of the stern tube that achieve the sealing against the possible leakage of the lubricant media in to the ship internal.

Outboard seal is the device fitted on the aft part of the stern tube that achieve the sealing against the possible sea water ingress and the leakage of the lubricant media.

Substantial Corrosion

An extent of corrosion such that assessment of corrosion pattern indicates wastage in excess of 75% of allowable margins, but within acceptable limits. For vessels built under Rules for Bulk Carrier and Oil Tanker (Pt.1, Vol.XVII) , substantial corrosion is an extent of corrosion such that the assessment of the corrosion pattern indicates a measured thickness between t_{ren} + 0,5 mm and t_{ren} where t_{ren} is the renewal thickness as defined in this sub-annex.

Supporting device

A device used to transmit external or internal loads from the door to a securing device and from the securing device to the ship's structure, or a device other than a securing device, such as a hinge, stopper or other fixed device, that transmits loads from the door to the ship's structure.

Suspect Area

Locations showing Substantial Corrosion and/or are considered by the surveyor to be prone to rapid wastage.

Total Loss

A constructive total loss is a situation where the cost of repairs plus the cost of salvage equal or exceed the value of the vessel. It also covers cases where the vessel has been abandoned in the reasonable belief that a total loss is inevitable. The calculation can be affected by environmental cleanup costs.

Transverse Section

A Transverse Section includes all longitudinal members such as plating, longitudinals and girders at the deck, sides, bottom, inner bottom and hopper side plating, longitudinal bulkheads and bottom plating in top wing tanks. For transversely framed vessels, a transverse section includes adjacent frames and their end connections in way of transverse sections.

Tube Shaft (Propeller and Tube Shaft)

Tube shaft is a shaft placed between the intermediate shaft and propeller shaft, normally arranged within a stern tube or running in open water. It may also be called Stern Tube Shaft.

Water Lubricated Bearing (Propeller and Tube Shaft)

Water lubricated bearings are bearings cooled / lubricated by water (fresh or salt).

Withdrawing Society

Withdrawing Society' is a Society which withdraws its class to an existing vessel in class under double or dual class arrangement. The withdrawing Society is sometimes referred to simply as the "losing", when the context is obvious.

A.8 List of Contact Points for Changing Classification Status

Table A.8.1 List of Contact Points for Changing Classification Status

Society	Office / Department	Person in charge	Tel. Number	Fax Number	e-mail address
BKI	PT. BIRO KLASIFIKASI INDONESIA (Head Office)	Head of Survey Division	+ 62 21 4301017 Or +62 21 4301703	+ 62 21 43936175 Or +62 21 43901973	svy@bki.co.id

Annex B Annexes to Section 4-I

B.1 Owner's Inspection Report . . . B-2
B.2 Example of Survey Programme . . . B-2
B.3 Survey Planning Questionnaire . . . B-6
B.4 Technical Assessment in Conjunction with the Planning of Enhanced Surveys for Class Renewal Survey Hull . . . B-9
B.5 Requirements for Extent of Thickness Measurement at Areas of Substantial Corrosion . . . B-16
B.6 Guidelines for the Gauging of the Vertically Corrugated Transverse Watertight Bulkhead Between Holds No. 1 and 2 . . . B-26
B.7 Guidelines for the Thickness Measurements of Side Shell Frames and Brackets in Single-Side Skin Bulk Carriers Required to Comply with URS 31 . . . B-29
B.8 Additional Annual Survey Requirements for the Foremost Cargo Hold of Ships Subject to Regulation XII/9 of the Convention . . . B-32
B.9 Strength of Cargo Hatch Cover Securing Arrangements for Bulk Carriers . . . B-33
B.10 Criteria for Longitudinal Strength of Hull Girder for Oil Tankers . . . B-33
A. General . . . B-33
B. Evaluation of longitudinal strength . . . B-33
C. Sampling method of thickness measurements for longitudinal strength evaluation and repair methods . . . B-34
B.11 Renewal Criteria for Side Shell Frames and Brackets in Single Side Skin Bulk Carriers and Single Side Skin OBO Carriers not Built in accordance with UR S12 Rev.1 or subsequent revisions (UR S31) . . . B-35
B.12 ESP Survey Reporting Principles . . . B-46
B.13 Recommended Procedures for Thickness Measurements . . . B-65
A. Recommended Procedures for Thickness Measurements of Ships . . . B-65
B. Recommended Procedures for Thickness Measurements of Ships Built According to The Net Scantling Approach . . . B-75
C. Recommended Procedures for Thickness Measurements of Bulk Carriers . . . B-102
D. Recommended Procedures for Thickness Measurements of Double Hull Oil Tankers B-120
E. Recommended Procedures for Thickness Measurements of Double Skin Bulk Carriers B-136

B.1 Owner's Inspection Report

Owner's inspection report – Structural condition							
- Ship's name: - For tank/hold No: - Grade of steel: deck : side : bottom : longitudinal bulkhead :							
Elements	**Cracks**	**Buckles**	**Corrosion**	**Coating condition**	**Pitting**	**Modification /Repair**	**Other**
Deck							
Bottom							
Side							
Side framing							
Long. Bulkheads							
Trans. Bulkheads							
- Repairs carried out due to: - Thickness measurements carried out (dates): - Results in general: - Overdue surveys: - Outstanding conditions of class: - Comments:							
Date of inspection : ..... Inspected by : ..... Signature :							

B.2 Example of Survey Programme

Basic information and particulars

Name of ship:
IMO number:
Flag State:
Port of registry:
Gross tonnage:
Deadweight (metric tonnes):
Length between perpendiculars (m):
Shipbuilder:
Hull number:
Recognized organization (RO):
RO ship identity:
Date of build of the ship:
Owner:
Thickness measurement firm:

Prepared by the owner in cooperation with BKI:

Date: ..... (name and signature of authorized owner's representative)

Date: ..... (name and signature of authorized BKI Surveyor)

1. Preamble

1.1 Scope

1.1.1 The present survey programme covers the minimum extent of overall surveys, close-up surveys, thickness measurements and pressure testing within the cargo length area, cargo holds, ballast tanks, including fore and aft peak tanks, required by the Rules in Section 4-I.

1.1.2 The arrangements and safety aspects of the survey should be acceptable to the attending surveyor(s).

1.2 Documentation

All documents used in the development of the survey programme should be available on board during the survey as required by Section 4-I.A.3.

2. Arrangement of cargo holds, tanks and spaces

This section of the survey programme should provide information (either in the form of plans or text) on the arrangement of cargo holds, tanks and spaces that fall within the scope of the survey.

3. List of cargo holds, tanks and spaces with information on their use, extent of coatings and corrosion prevention system

This section of the survey programme should indicate any changes relating to (and should update) the information on the use of the holds and tanks of the ship, the extent of coatings and the corrosion prevention system provided in the survey planning questionnaire.

4. Conditions for survey

This section of the survey programme should provide information on the conditions for survey, e.g. information regarding cargo hold and tank cleaning, gas freeing, ventilation, lighting, etc.

5. Provisions and method of access to structures

This section of the survey programme should indicate any changes relating to (and should update) the information on the provisions and methods of access to structures provided in the survey planning questionnaire.

6. List of equipment for survey

This section of the survey programme should identify and list the equipment that will be made available for carrying out the survey and the required thickness measurements.

7. Survey requirements

7.1 Overall survey

This section of the survey programme should identify and list the spaces that should undergo an overall survey for this ship.

7.2 Close-up survey

This section of the survey programme should identify and list the hull structures that should undergo a close-up survey for this ship.

8. Identification of tanks for tank testing

This section of the survey programme should identify and list the cargo holds and tanks that should undergo tank testing for this ship.

9. Identification of areas and sections for thickness measurements

This section of the survey programme should identify and list the areas and sections where thickness measurements should be taken.

10. Minimum thickness of hull structures

This section of the survey programme should specify the minimum thickness for hull structures of this ship that are subject to survey, according to (a) or (b):

(a) Determined from the attached wastage allowance table and the original thickness to the hull structure plans of the ship;

(b) Given in the following table(s):

Area or location	Original as-built thickness (mm)	Minimum thickness (mm)	Substantial corrosion thickness (mm)
Deck			
Plating			
Longitudinals			
Longitudinal girders			
Cross deck plating			
Cross deck stiffeners			
Bottom			
Plating			
Longitudinals			
Longitudinal girders			
Inner bottom			
Plating			
Longitudinals			
Longitudinal girders			
Floors			
Ship side in way of topside tanks			
Plating			
Longitudinals			
Ship side in way of hopper side tanks			
Plating			
Longitudinals			
Ship side in way of tanks (if applicable)			
Plating			
Longitudinals			
Longitudinal stringers			
Ship side in way of cargo holds			
Plating			
Side frames webs			
Side frames flanges			
Upper brackets webs			
Upper brackets flanges			
Lower brackets webs			
Lower brackets flanges			

Continued from previous table

Area or location	Original as-built thickness (mm)	Minimum thickness (mm)	Substantial corrosion thickness (mm)
Longitudinal bulkhead (if applicable)			
Plating			
Longitudinals (if applicable)			
Longitudinal girders (if applicable)			
Transverse bulkheads			
Plating			
Stiffeners (if applicable)			
Upper stool plating			
Upper stool stiffeners			
Lower stool plating			
Lower stool stiffeners			
Transverse web frames in topside tanks			
Plating			
Flanges			
Stiffeners			
Transverse web frames in hopper tanks			
Plating			
Flanges			
Stiffeners			
Hatch covers			
Plating			
Stiffeners			
Hatch coamings			
Plating			
Stiffeners			

Note:

The wastage allowance tables should be attached to the survey programme.

11. Thickness measurement firm

This section of the survey programme should identify changes, if any, relating to the information on the thickness measurement firm provided in the survey planning questionnaire.

12. Damage experience related to the ship

This section of the survey programme should, using the tables provided below, provide details of the hull damages for at least the last three years in way of the cargo holds, ballast tanks and void spaces within the cargo length area. These damages are subject to survey.

Hull damages sorted by location for this ship

Cargo hold, tank or space number or area	Possible cause, if known	Description of the damages	Location	Repair	Date of repair

Hull damages for sister or similar ships (if available) in the case of design-related damage

Cargo hold, tank or space number or area	Possible cause, if known	Description of the damages	Location	Repair	Date of repair

13. Areas identified with substantial corrosion from previous surveys

This section of the survey programme should identify and list the areas of substantial corrosion from previous surveys.

14. Critical structural areas and suspect areas

This section of the survey programme should identify and list the critical structural areas and the suspect areas, when such information is available.

15. Other relevant comments and information

This section of the survey programme should provide any other comments and information relevant to the survey.

B.3 Survey Planning Questionnaire

1. The following information will enable the owner in cooperation with the Administration to develop a survey programme complying with the requirements of the Rules. It is essential that the owner provides, when completing the present questionnaire, up-to-date information. The present questionnaire, when completed, should provide all information and material required by the Rules.

Particulars

Ship's name:

IMO number:

Flag State:

Port of registry:

Owner:

Recognized organization:

RO Ship identity:

Gross tonnage:

Deadweight (metric tonnes):

Date of build:

2. Information on access provision for close-up surveys and thickness measurement:

The owner should indicate, in the table below, the means of access to the structures subject to close-up survey and thickness measurement. A close-up survey is an examination where the details of structural components are within the close visual inspection range of the attending surveyor, i.e. normally within reach of hand.

Hold/Tank No.	Structure	Temporary staging	Rafts	Ladders	Direct access	Other means (please specify)
F.P.	Fore peak					
A.P.	Aft peak					
Cargo holds	Hatch side coamings					
	Topside sloping plate					
	Upper stool plating					
Cargo holds	Cross deck					
	Side shell, frames and brackets					
	Transverse bulkhead					
	Hopper tank plating					
	Lower stool					
	Tank top					
Topside tanks	Under deck structure					
	Side shell and structure					
	Sloping plate and structure					
	Webs and bulkheads					
Hopper tanks	Hopper sloping plate and structure					
	Side shell and structure					
Hopper tanks	Bottom structure					
	Webs and bulkheads					
	Double-bottom structure					
	Upper stool internal structure					
	Lower stool internal structure					
History of bulk cargoes of a corrosive nature (e.g. high sulphur content)						

3. Owner's inspections

Using a format similar to that of the table below (which is given as an example), the owner should provide details of the results of their inspections, for the last 3 years in accordance with the Rules on all cargo holds and ballast tanks and void spaces within the cargo area.

Tank/Hold No.	Corrosion protection (1)	Coating extent (2)	Coating condition (3)	Structural deterioration (4)	Hold and tank history (5)
Cargo tanks/holds					
Topside tanks					
Hopper tanks					
Double-side skin tanks					
Double-bottom tanks					
Upper stools					
Lower stools					
Ballast Tank					
Fore peak					
Aft peak					
Miscellaneous other spaces:					

Note:
Indicate tanks which are used for oil/ballast.
(1) HC = hard coating; SC = soft coating;
SH = semi-hard coating; NP = no protection
(2) U = upper part; M = middle part;
L = lower part; C = complete
(3) G = good; F = fair; P = poor;
RC = recoated (during the last three years)
(4) N = no findings recorded; Y = findings recorded, description of findings should be attached to this questionnaire
(5) DR = Damage & Repair; L = Leakages;
CV = Conversion (description to be attached to this questionnaire)

Name of owner's representative:……

Signature:……

Date: ……

Reports of port State control inspections

List the reports of port State control inspections containing hull structural related deficiencies and relevant information on rectification of the deficiencies:

Safety management system

_____
_____
_____

List non-conformities related to hull maintenance including the associated corrective actions:

Name and address of the approved thickness measurement firm:

B.4 Technical Assessment in Conjunction with the Planning of Enhanced Surveys for Class Renewal Survey Hull

1. Introduction

These Annex contain information and suggestions concerning technical assessments which may be of use in conjunction with the planning of enhanced renewal examination. As indicated in Section 4-I, this Annex are a recommended tool which may be invoked at the discretion of BKI, when considered necessary and appropriate, in conjunction with the preparation of the required survey programme. Following references may be observed if necessary.

— Reference 1: TSCF "Guidelines Manual for the Inspection and Condition Assessment of Tanker Structures, 1986"

— Reference 2: TSCF "Condition Evaluation and Maintenance of Tanker Structures, 1992"

— Reference 3: TSCF "Guidelines for the Inspection and maintenance of Double Hull Tanker Structures, 1995."

— Reference 4: TSCF "Guidelines Manual for Tanker Structures, 1997."

— Reference 5 : IACS "Bulk Carriers : Guidelines for Surveys, Assessment and Repair of Hull Structures"

2. Purpose and principles

2.1 Purpose

The purpose of the technical assessments described in these Annex is to assist in identifying critical structural areas, nominating suspect areas and in focusing attention on structural elements or areas of structural elements which may be particularly susceptible to, or evidence a history of, wastage or damage. This information may be useful in nominating locations, areas, holds and tanks for thickness measurement, close-up survey and tank testing.

Critical structural areas are locations which have been identified from calculations to require monitoring or from the service history of the subject ship or from similar or sister ships (if available) to be sensitive to cracking, buckling or corrosion which would impair the structural integrity of the ship.

2.2 Minimum requirements

These Annex may not be used to reduce the requirements of Close up and Thickness measurement in Section 4-I and relevant requirement for close-up survey, thickness measurement and tank testing, respectively, which are, in all cases, to be complied with as a minimum.

2.3 Timing

As with other aspects of survey planning, the technical assessments described in these Annex should be completed by the owner or operator in cooperation with BKI in advance of the commencement of the class renewal survey, i.e. prior to commencing the survey and normally at least 12 to 15 months before the survey's completion due date.

2.4 Aspects to be considered

2.4.1 Technical assessments, which may include quantitative or qualitative evaluation of relative risks of possible deterioration, of the following aspects of a particular ship may be used as a basis for the nomination of holds, tanks and areas for survey:

— design features such as stress levels on various structural elements, design details and extent of use of high-tensile steel;

— former history with respect to corrosion, cracking, buckling, indents and repairs for the particular ship as well as similar vessels, where available; and

— information with respect to types of cargo carried, protection of tanks, and condition of coating, if any, of holds and tanks.

2.4.2 Technical assessments of the relative risks of susceptibility to damage or deterioration of various structural elements and areas should be judged and decided on the basis of recognized principles and practices.

3. Technical assessment

3.1 General

3.1.1 There are three basic types of possible failure which may be the subject of technical assessment in connection with planning of surveys: corrosion, cracks and buckling. Contact damages are not normally covered by the survey plan since indents are usually noted in memoranda and assumed to be dealt with as a normal routine by surveyors.

3.1.2 Technical assessments performed in conjunction with the survey planning process should, in principle, be as shown schematically in Fig. B.4.1 which depicts, schematically, how technical assessments can be carried out in conjunction with the survey planning process. The approach is based on an evaluation of experience and knowledge basically related to:

1) design; and

2) corrosion.

3.1.3 The design should be considered with respect to structural details which may be susceptible to buckling or cracking as a result of vibration, high stress levels or fatigue.

3.1.4 Corrosion is related to the ageing process, and is closely connected with the quality of corrosion protection at new building, and subsequent maintenance during the service life. Corrosion may also lead to cracking and/or buckling.

3.2 Methods

3.2.1 Design details

.1 Damage experience related to the ship in question and similar ships, where available, is the main source of information to be used in the process of planning. In addition, a selection of structural details from the design drawings should be included.

.2 Typical damage experience to be considered will consist of:

— number, extent, location and frequency of cracks; and

— location of buckles.

This information may be found in the survey reports and/or the owner's files, including the results of the owner's own inspections. The defects should be analysed, noted and marked on sketches.

In addition, general experience should be utilized. For example, Fig. B.4.2 shows typical locations in bulk carriers which experience has shown may be susceptible to structural damage. Also, reference[1)] should be made which contains a catalogue of typical damages and proposed repair methods for various ship structural details.

Such figures should be used together with a review of the main drawings, in order to compare with the actual structure and search for similar details which may be susceptible to damage. An example is shown in Fig. B.4.3 and Fig. B.4.4.

In particular, Chapter 3 of Ref.3 deals with various aspects specific to double hull tankers, such as stress concentration locations, misalignment during construction, corrosion trends, fatigue considerations and areas requiring special attention, which are to be considered in working out the survey planning. While Chapter 4 of Ref. 3 addresses experience gained on structural defects in double hulls (chemical tankers, OBO carriers, ore/oil carriers, gas carriers), which are also to be considered in working out the survey planning.

The review of the main structural drawings, in addition to using the above-mentioned figures, should include checking typical design details where cracking has been experienced. The factors contributing to damage should be carefully considered.

The use of high-tensile steel (HTS) is an important factor. Details showing good service experience where ordinary, mild steel has been used may be more susceptible to damage when HTS, and its higher associated stresses, are utilized. There is extensive and, in general, good experience with the use of HTS for longitudinal material in deck and bottom structures. Experience in other locations, where the dynamic stresses may be higher, is less favourable, e.g. side structures.

In this respect, stress calculations of typical and important components and details, in accordance with relevant methods, may prove useful and should be considered.

The selected areas of the structure identified during this process should be recorded and marked on the structural drawings to be included in the survey programme.

3.2.2 Corrosion

In order to evaluate relative corrosion risks, the following information is generally to be considered:

— usage of tanks, holds and spaces;

— condition of coatings;

— cleaning procedures;

— previous corrosion damage;

— ballast use and time for cargo holds;

— risk of corrosion in cargo holds and ballast tanks; and

— location of ballast tanks adjacent to heated fuel oil tanks.

[1)] For oil tanker see Ref.2, for bulk carrier see Ref.5, for chemical tankers and double hull oil tankers see Ref.3 and Ref.5, for double side bulk carrier see Ref.3 and Ref.5
Ref. 3, which contains catalogues of typical damages and proposed repair methods for double hull oil tanker structural details which may to some extent be similar to structural details in double skin bulk carrier

The references[2] gives definitive examples which can be used for judging and describing coating condition, using typical pictures of conditions.

Reference[3] should be used as the basis for the evaluation of corrosion risk, together with the age of the ship and relevant information on the anticipated condition of the ship as derived from the information collected in order to prepare the survey programme.

The various tanks, holds and spaces should be listed with the corrosion risks nominated accordingly.

Special attention is to be given to the areas where the double hull tanker is particularly exposed to corrosion. To do this end, the specific aspects addressing corrosion in double hull tankers indicated in 3.4 (Corrosion trends) of Ref.3 are to be taken into account.

3.2.3 Locations for close-up survey and thickness measurement

On the basis of the table of corrosion risks and the evaluation of design experience, the locations for initial close-up survey and thickness measurement (sections) may be nominated.

The sections subject to thickness measurement should normally be nominated in tanks, holds and spaces where corrosion risk is judged to be the highest.

The nomination of tanks, holds and spaces for close-up survey should, initially, be based on highest corrosion risk, and should always include ballast tanks. The principle for the selection should be that the extent is increased by age or where information is insufficient or unreliable.

[2] For oil tanker and bulk carrier see Ref.2, for chemical tanker, double hull oil tanker and double side bulk carrier see Ref.4

[3] For oil tanker see Ref.2, for bulk carrier see Ref.5, for chemical tanker and double hull oil tanker see Ref.4, for double side bulk carrier see Ref.4 and Ref.5

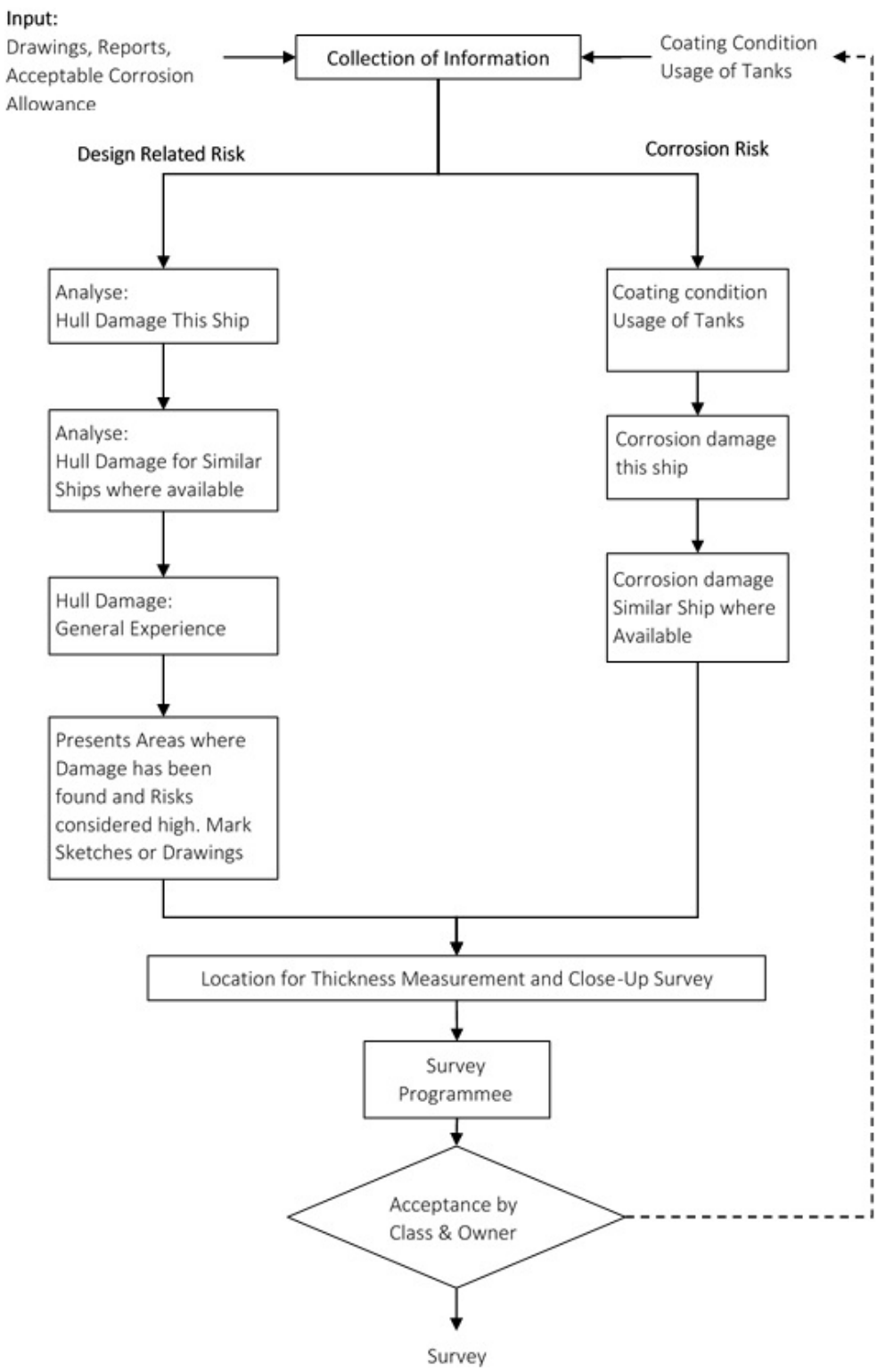

Fig. B.4.1 Technical assessment and the survey planning process

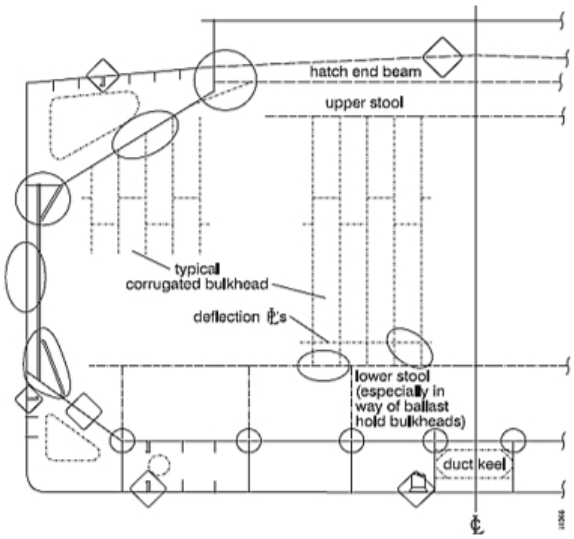

Fig. B.4.2 Typical locations susceptible to structural damage or corrosion in bulk carriers

BULK CARRIER	Guidelines for Surveys, Assessment and Repair of Hull Structure	
Part 1	Cargo hold region	Example No.
Area 3	Cargo hold side structure	1-a
Detail of damage	Fractures in brackets at termination on frame	

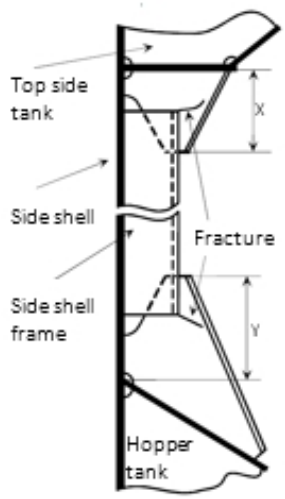

Separate bracket configuration

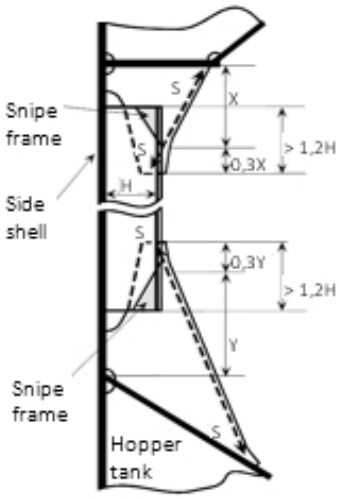

S = Snipped end

Notes on possible cause damage

1. This type of damage is caused due to stress concentration.

Notes on repairs

1. For small fractures, e. g. hairline fractures, the fracture can be veed-out, ground, examined by NDT for fractures, and rewelded.
2. For larger/significant fractures consideration is to be given to cropping and partly renewing/renewing the frame brackets. If renewing the brackets, end of frames can be sniped to soften them.
3. If felt prudent, soft toes are to be incorporated at the boundaries of the bracket to the hopper plating.
4. Attention to be given to the structure in wing tank in way of the extended bracket arm. i.e. reinforcement provided in line with the bracket.

Fig. B.4.3 Typical damage and repair example (reproduced from reference 5)

Location :	Connection of longitudinals to transverse webs	
Example No:	1. Web and flat bar fractures at cut-outs for longitudinals stiffener connections	

TYPICAL DAMAGE

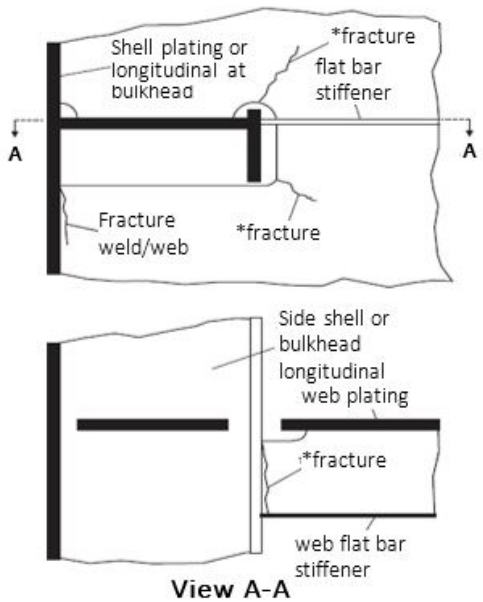

Note* one or more fractures may occur

PROPOSED REPAIR

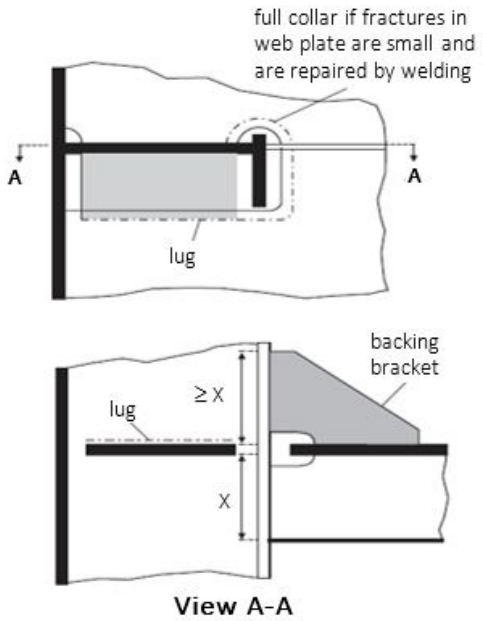

Web and flat bar cropped and part renewed or alternatively welded

Factors contributing to damage:

1. Asymmetrical connection of flat bar stiffener resulting in high peak stresses at the heel of the stiffener under fatigue loading.
2. Insufficient area of connection of longitudinal to web plate.
3. Defective weld at return around the plate thickness.
4. High localised corrosion at areas of stress concentration such as flat bar stiffener connections, corners of cut-out for the longitudinal and connection of web to shell at cut-outs.
5. High stress in the web of the transverse.
6. Dynamic sea way load/ship motions

Figure 1	Tankers structure co-operative forum (TSCF) Subject: catalogue of structural details	Figure 1

Fig. B.4.4 Typical damage and repair example (reproduced from reference 1)

B.5 Requirements for Extent of Thickness Measurement at Areas of Substantial Corrosion

1. Oil Tankers within the cargo area length

1.1 Bottom structure

Structural member	Extent of measurement	Pattern of measurement
1. Bottom plating	Minimum of three bays across tank, including aft bay. Measurements around and under all bell mouths	Five-point pattern for each panel between longitudinals and webs
2. Bottom longitudinals	Minimum of three longitudinals in each bay where bottom plating Measured	Three measurements in line across flange and three measurements on vertical web
3. Bottom girders and brackets	At fore and aft transverse bulkhead bracket toes and in centre of tanks	Vertical line of single measurements on web plating with one measurement between each panel stiffener, or a minimum of three measurements. Two measurements across face flat. Five-point pattern on girder/bulkhead brackets
4. Bottom transverse webs	Three webs in bays where bottom plating measured, with measurements at both ends and middle	Five-point pattern over 2 m^2 area. Single measurements on face flat.
5. Panel stiffening	Where fitted	Single measurements

1.2 Deck structure

Structural member	Extent of measurement	Pattern of measurement
1. Deck plating	Two bands across tank	Minimum of three measurements per plate per band
2. Deck longitudinals	Minimum of three longitudinals in each of two bays	Three measurements in line vertically on webs, and two measurements on flange (if fitted)
3. Deck girders and brackets	At fore and aft transverse bulkhead, bracket toes and in centre of tanks	Vertical line of single measurements on web plating with one measurement between each panel stiffener, or a minimum of three measurements. Two measurements across face flat. Five-point pattern on girder/bulkhead brackets
4. Deck transverse webs	Minimum of two webs with measurements at middle and both ends of span	Five-point pattern over about 2 m^2 area. Single measurements on face flat
5. Panel stiffening	Where available	Single measurements

1.3 Shell and longitudinal bulkheads

Structural member	Extent of measurement	Pattern of measurement
1. Deckhead and bottom strakes, and strakes in way of stringer platforms	Plating between each pair of longitudinals in a minimum of three bays	Single measurement
2. All other strakes	Plating between every third pair of longitudinals in same three bays	Single measurement

Continued from previous table

Structural member	Extent of measurement	Pattern of measurement
3. Longitudinals – deckhead and bottom strakes	Each longitudinal in same three bays	Three measurements across web and one measurement on flange
4. Longitudinals – all others	Every third longitudinal in same three bays	Three measurements across web and one measurement on flange
5. Longitudinals – bracket	Minimum of three at top, middle and bottom of tank in same three bays	Five-point pattern over area of bracket
6. Web frames and cross ties	Three webs with minimum of three locations on each web, including in way of cross tie connections	Five-point pattern over about 2 m^2 area, plus single measurements on web frame and cross tie face flats

1.4 Transverse bulkheads and swash bulkheads

Structural member	Extent of measurement	Pattern of measurement
1. Deckhead and bottom strakes, and strakes in way of stringer platforms	Plating between pair of stiffeners at three locations approximately quarter, half and three-quarters width of tank	Five-point pattern between stiffeners over 1 m length
2. All other strakes	Plating between pair of stiffeners at middle location	Single measurement
3. Strakes in corrugated bulkheads	Plating for each change of scantling at centre of panel and at flange or fabricated connection	Five-point pattern over about 1 m^2 of plating
4. Stiffeners	Minimum of three typical stiffeners	For web, five-point pattern over span between bracket connections (two measurements across web at each bracket connection, and one at centre of span). For flange, single measurements at each bracket toe and at centre of span
5. Brackets	Minimum of three at top, middle and bottom of tank	Five-point pattern over area of bracket
6. Deep webs and girders	Measurements at toe of bracket and centre of span	For web, five-point pattern over about 1 m^2 area. Three measurements across face flat
7. Stringer platforms	All stringers with measurements at both ends and middle	Five-point pattern over 1 m^2 area plus single measurements near bracket toes and on face flats

2. Double-hull Oil Tankers within the cargo area length

2.1 Bottom, inner bottom and hopper structure

Structural member	Extent of measurement	Pattern of measurement
Bottom, inner bottom and hopper structure plating	Minimum of three bays across double-bottom tank, including aft bay Measurements around and under all suction bell mouths	Five-point pattern for each panel between longitudinals and floors
Bottom, inner bottom and hopper structure longitudinals	Minimum of three longitudinals in each bay where bottom plating measured	Three measurements in line across flange and three measurements on vertical web
Bottom girders, including the watertight ones	At fore and aft watertight floors and in centre of tanks	Vertical line of single measurements on girder plating with one measurement between each panel stiffener, or a minimum of three measurements

Continued from previous table

Structural member	Extent of measurement	Pattern of measurement
Bottom floors, including the watertight ones	Three floors in bays where bottom plating measured, with measurements at both ends and middle	Five-point pattern over 2 m^2 area
Hopper structure web frame ring	Three floors in bays where bottom plating measured	Five-point pattern over 1 m^2 of plating. Single measurements on flange
Hopper structure transverse watertight bulkhead or swash bulkhead	- lower ⅓ of bulkhead	Five-point pattern over 1 m^2 of plating
	- upper ⅔ of bulkhead	Five-point pattern over 2 m^2 of plating
	- stiffeners (minimum of three)	For web, five-point pattern over span (two measurements across web at each end and one at centre of span). For flange, single measurements at each end and centre of span
Panel stiffening	Where applicable	Single measurements

2.2 Deck structure

Structural member	Extent of measurement	Pattern of measurement
Deck plating	Two transverse bands across tank	Minimum of three measurements per plate per band
Deck longitudinals	Every third longitudinal in each of two bands with a minimum of one longitudinal	Three measurements in line vertically on webs and two measurements on flange (if fitted)
Deck girders and brackets (usually in cargo tanks only)	At fore and aft transverse bulkhead, bracket toes and in centre of tanks	Vertical line of single measurements on web plating with one measurement between each panel stiffener, or a minimum of three measurements. Two measurements across flange. Five-point pattern on girder/bulkhead brackets
Deck transverse webs	Minimum of two webs, with measurements at both ends and middle of span	Five-point pattern over 1 m^2 area. Single measurements on flange
Vertical web and transverse bulkhead in wing ballast tank (2 m from deck)	Minimum of two webs, and both transverse bulkheads	Five-point pattern over 1 m^2 area
Panel stiffening	Where applicable	Single measurements

2.3 Structure in wing ballast tanks

Structural member	Extent of measurement	Pattern of measurement
Side shell and longitudinal bulkhead plating: - upper strake and strakes in way of horizontal girders - all other strakes	- Plating between each pair of longitudinals in a minimum of three bays (along the tank) - Plating between every third pair of longitudinals in same three bays	- Single measurement - Single measurement
Side shell and longitudinal bulkhead longitudinals on: - upper strake - all other strakes	- Each longitudinal in same three bays - Each third longitudinal in same three bays	- Three measurements across web and one measurement on flange - Three measurements across web and one measurement on flange

Continued from previous table

Structural member	Extent of measurement	Pattern of measurement
Longitudinals - brackets	Minimum of three at top, middle and bottom of tank in same three bays	Five-point pattern over area of bracket
Vertical web and transverse bulkheads (excluding deckhead area): - strakes in way of horizontal girders - other strakes	- Minimum of two webs and both transverse bulkheads - Minimum of two webs and both transverse bulkheads	- Five-point pattern over approximately 2 m^2 area - Two measurements between each pair of vertical stiffeners
Horizontal girders	Plating on each girder in a minimum of three bays	Two measurements between each pair of longitudinal girder stiffeners
Panel stiffening	Where applicable	Single measurements

2.4 Longitudinal bulkheads in cargo tanks

Structural member	Extent of measurement	Pattern of measurement
Deckhead and bottom strakes, and strakes in way of the horizontal stringers of transverse bulkheads	Plating between each pair of longitudinals in a minimum of three bays	Single measurement
All other strakes	Plating between every third pair of longitudinals in same three bays	Single measurement
Longitudinals on deckhead and bottom strakes	Each longitudinal in same three bays	Three measurements across web and one measurement on flange
All other longitudinals	Every third longitudinal in same three bays	Three measurements across web and one measurement on flange
Longitudinals brackets	Minimum of three at top, middle and bottom of tank in same three bays	Five-point pattern over area of bracket
Web frames and cross ties	Three webs with minimum of three locations on each web, including in way of cross tie connections	Five-point pattern over approximately 2 m^2 area of webs, plus single measurements on flanges of web frame and cross ties
Lower end brackets (opposite side of web frame)	Minimum of three brackets	Five-point pattern over approximately 2 m^2 area of brackets, plus single measurements on bracket flanges

2.5 Transverse watertight and swash bulkheads in cargo tanks

Structural member	Extent of measurement	Pattern of measurement
Upper and lower stool, where fitted	- Transverse band within 25 mm of welded connection to inner bottom/deck plating - Transverse band within 25 mm of welded connection to shelf plate	Five-point pattern between stiffeners over 1 m length
Deckhead and bottom strakes, and strakes in way of horizontal stringers	Plating between pair of stiffeners at three locations: approximately ¼, ½ and ¾ width of tank	Five-point pattern between stiffeners over 1 m length
All other strakes	Plating between pair of stiffeners at middle location	Single measurement
Strakes in corrugated bulkheads	Plating for each change of scantling at centre of panel and at flange of fabricated connection	Five-point pattern over approximately 1 m^2 of plating

Continued from previous table

Structural member	Extent of measurement	Pattern of measurement
Stiffeners	Minimum of three typical stiffeners	For web, five-point pattern over span between bracket connections (two measurements across web at each bracket connection and one at centre of span) For flange, single measurements at each bracket toe and at centre of span
Brackets	Minimum of three at top, middle and bottom of tank	Five-point pattern over area of bracket
Horizontal stringers	All stringers with measurements at both ends and middle	Five-point pattern over 1 m^2 area, plus single measurements near bracket toes and on flanges

3. Bulk Carriers within the cargo area

3.1 Shell plating

Structural member	Extent of measurement	Pattern of measurement
1. Bottom and side shell plating	a. Suspect plate, plus four adjacent plates b. See other tables for particulars on gauging in way of tanks and cargo holds	a. Five-point pattern for each panel between longitudinals
2. Bottom/side shell longitudinals	Minimum of three longitudinals in way of suspect areas	Three measurements in line across web Three measurements on flange

3.2 Transverse bulkheads in cargo holds

Structural member	Extent of measurement	Pattern of measurement
1. Lower stool	a. Transverse band within 25 mm of welded connection to inner bottom b. Transverse band within 25 mm of welded connection to shelf plate	a. Five-point pattern between stiffeners over 1 m length b. Ditto
2. Transverse bulkhead	a. Transverse band at approximately mid-height b. Transverse band at part of bulkhead adjacent to upper deck or below upper stool shelf plate (for those ships fitted with upper stools)	a. Five-point pattern over 1 m^2 of plating b. Five-point pattern over 1 m^2 of plating

3.3 Deck structure including cross strips, main cargo hatchways, hatch covers, coamings and topside tanks

Structural member	Extent of measurement	Pattern of measurement
1. Cross-deck strip plating	Suspect cross-deck strip plating	Five-point pattern between under deck stiffeners over 1 m length
2. Under-deck stiffeners	a. Transverse member b. Longitudinal member	a. Five-point pattern at each end and mid-span b. Five-point pattern on both web and flange
3. Hatch covers	a. Side and end skirts, each three locations b. Three longitudinal bands, outboard strakes (2) and centreline strake (1)	a. Five-point pattern at each location b. Five-point measurement each band

Continued from previous table

Structural member	Extent of measurement	Pattern of measurement
4. Hatch coamings	Each side and end of coaming, one band lower third, one band upper two-thirds of coaming	Five-point measurement. Each. band, i.e. end or side coaming
5. Topside water ballast tanks	a. Watertight transverse bulkheads i. lower third of bulkhead ii. upper two-thirds of bulkhead iii. stiffeners b. Two representative swash transverse bulkheads i. lower third of bulkhead ii. upper two-thirds of bulkhead iii. stiffeners c. Three representative bays of slope plating i. lower third of tank ii. upper two-thirds of tank d. Longitudinals, suspect and adjacent	 i. five-point pattern over 1 m^2 of plating ii. five-point pattern over 1 m^2 of plating iii. five-point pattern over 1 m length i. five-point pattern over 1 m^2 of plating ii. five-point pattern over 1 m^2 of plating iii. five-point pattern over 1 m length i. five-point pattern over 1 m^2 of plating ii. five-point pattern over 1 m^2 of plating d. five-point pattern both web and flange over 1 m length
6. Main deck plating	Suspect plates and adjacent (4)	Five-point pattern over 1 m^2 of plating
7. Main deck longitudinals	Minimum of three longitudinals where plating measured	Five-point pattern on both web and flange over 1 m length
8. Web frames/transverses	Suspect plates	Five-point pattern over 1 m^2

3.4 Double-bottom and hopper structure

Structural member	Extent of measurement	Pattern of measurement
1. Inner/double-bottom plating	Suspect plate plus all adjacent plates	Five-point pattern for each panel between longitudinals over 1 m length
2. Inner/double-bottom longitudinals	Three longitudinals where plates measured	Three measurements in line across web, and three measurements on flange
3. Longitudinal girders or transverse floors	Suspect plates	Five-point pattern over about 1 m^2
4. Watertight bulkheads (WT floors)	a. Lower third of tank b. Upper two thirds of tank	a. Five-point pattern over 1 m^2 of plating b. Five-point pattern alternate plates over 1 m^2 of plating
5. Web frames	Suspect plate	Five-point pattern over 1 m^2 of plating
6. Bottom/side shell longitudinals	Minimum of three longitudinals in way of suspect areas	Three measurements in line across web, and three measurements on flange

3.5 Cargo holds

Structural member	Extent of measurement	Pattern of measurement
Side shell frames	Suspect frame and each adjacent	a. at each end and mid span: five-point pattern of both web and flange b. Five-point pattern within 25 mm of welded attachment to both shell and lower slope plate

4. Double skin Bulk Carriers within the cargo area

4.1 Bottom, inner bottom and hopper structure

Structural member	Extent of measurement	Pattern of measurement
Bottom, inner bottom and hopper structure plating	Minimum of three bays across double-bottom tank, including aft bay Measurements around and under all suction bell mouths	Five-point pattern for each panel between longitudinals and floors
Bottom, inner bottom and hopper structure longitudinals	Minimum of three longitudinals in each bay where bottom plating measured	Three measurements in line across flange and three measurements on the vertical web
Bottom girders, including the watertight ones	At fore and aft watertight floors and in centre of tanks	Vertical line of single measurements on girder plating with one measurement between each panel stiffener, or a minimum of three measurements
Bottom floors, including the watertight ones	Three floors in the bays where bottom plating measured, with measurements at both ends and middle	Five-point pattern over 2 m ^{2} area
Hopper structure web frame ring	Three floors in bays where bottom plating measured	Five-point pattern over 1 m^2 of plating Single measurements on flange
Hopper structure transverse watertight bulkhead or swash bulkhead	– lower ⅓ of bulkhead	- five-point pattern over 1 m^2 of plating
	– upper ⅔ of bulkhead	- five-point pattern over 2 m^2 of plating
	– stiffeners (minimum of three)	- For web, five-point pattern over span (two measurements across web at each end and one at centre of span). For flange, single measurements at each end and centre of span
Panel stiffening	Where applicable	Single measurements

4.2 Deck structure including cross strips, main cargo hatchways, hatch covers, coamings and topside tanks

Structural member	Extent of measurement	Pattern of measurement
Cross deck strip plating	Suspect cross deck strip plating	Five-point pattern between under deck stiffeners over 1 m length
Under deck stiffeners	Transverse members Longitudinal member	Five-point pattern at each end and mid span Five-point pattern on both web and flange
Hatch covers	Side and end skirts, each three locations Three longitudinal bands, outboard strakes (2) and centreline strake (1)	Five-point pattern at each location Five-point measurement each band
Hatch coamings	Each side and end of coaming, one band lower ⅓, one band upper ⅔ of coaming	Five-point measurement each band, i.e. end or side coaming
Topside ballast tanks	a) watertight transverse bulkheads: – Lower ⅓ of bulkhead – Upper ⅔ of bulkhead – Stiffeners	 Five-point pattern over 1 m^2 of plating Five-point pattern over 1 m^2 of plating Five-point pattern over 1 m length
	b) two representative swash transverse bulkheads: – Lower ⅓ of bulkhead – Upper ⅔ of bulkhead – Stiffeners	 Five-point pattern over 1 m^2 of plating Five-point pattern over 1 m^2 of plating Five-point pattern over 1 m length
	c) three representative bays of slope plating:	

Continued from previous table

Structural member	Extent of measurement	Pattern of measurement
	– Lower ⅓ of tank – Upper ⅔ of tank	Five-point pattern over 1 m^2 of plating Five-point pattern over 1 m^2 of plating
	d) Longitudinals, suspect and adjacent	Five-point pattern on both web and flange over 1 m length
Main deck plating	Suspect plates and adjacent (4)	Five-point pattern over 1 m^2 of plating
Main deck longitudinals	Suspect plates	Five-point pattern on both web and flange over 1 m length
Web frames/ Transverses	Suspect plates	Five-point pattern over 1 m^2 of plating

4.3 Structure in double-side spaces of double-side skin bulk carriers including wing void spaces of ore carriers

Structural member	Extent of measurement	Pattern of measurement
Side shell and inner plating: - Upper strake and strakes in way of horizontal girders - All other strakes	- Plating between each pair of transverse frames/longitudinals in a minimum of three bays (along the tank) - Plating between every third pair of longitudinals in same three bays	- Single measurement - Single measurement
Side shell and inner side transverse frames/ longitudinals on: - upper strake - all other strakes	- Each transverse frame/longitudinal in same three bays - Each third transverse frame/longitudinal in same three bays	- Three measurements across web and one measurement on flange - Three measurements across web and one measurement on flange
Transverse frames/ longitudinals: – brackets	Minimum of three at top, middle and bottom of tank in same three bays	Five-point pattern over area of bracket
Vertical web and transverse bulkheads: – strakes in a way of horizontal girders – other strakes	– Minimum of two webs and both transverse bulkheads – Minimum of two webs and both transverse bulkheads	– Five-point pattern over approximately 2 m^2 area – Two measurements between each pair of vertical stiffeners
Horizontal girders	Plating on each girder in a minimum of three bays	Two measurements between each pair of longitudinal girder stiffeners
Panel stiffening	Where applicable	Single measurements

4.4 Transverse bulkheads in cargo holds

Structural member	Extent of measurement	Pattern of measurement
Lower stool, where fitted	- Transverse band within 25 mm of welded connection to inner bottom - Transverse bands within 25 mm of welded connection to shelf plate	- Five-point pattern between stiffeners over 1 m length - Five-point pattern between stiffeners over 1 m length
Transverse bulkheads	- Transverse band at approximately mid height - Transverse band at part of bulkhead adjacent to upper deck or below upper stool shelf plate (for those ships fitted with upper stools)	- Five-point pattern over 1 m^2 of plating - Five-point pattern over 1 m^2 of plating

5. Chemical Tankers within the cargo area

5.1 Bottom, inner bottom and hopper structure

Structural member	Extent of measurement	Pattern of measurement
Bottom, inner bottom and hopper structure plating	Minimum of three bays across double-bottom tank, including aft bay Measurements around and under all suction bell mouths	Five-point pattern for each panel between longitudinals and floors
Bottom, inner bottom and hopper structure longitudinals	Minimum of three longitudinals in each bay where bottom plating measured	Three measurements in line across flange and three measurements on vertical web
Bottom girders, including the watertight ones	At fore and aft watertight floors and in centre of tanks	Vertical line of single measurements on girder plating with one measurement between each panel stiffener, or a minimum of three measurements Two measurements across face flat where fitted.
Bottom floors, including the watertight ones	Three floors in bays where bottom plating measured, with measurements at both ends and middle	Five-point pattern over 2 m^2 area
Hopper structure web frame ring	Three floors in bays where bottom plating measured	Five-point pattern over 1 m^2 of plating. Single measurements on flange
Hopper structuretransverse watertight bulkhead or swash bulkhead	- lower ⅓ of bulkhead	Five-point pattern over 1 m^2 of plating
	- upper ⅔ of bulkhead	Five-point pattern over 2 m^2 of plating
	- stiffeners (minimum of three)	For web, five-point pattern over span (two measurements across web at each end and one at centre of span). For flange, single measurements at each end and centre of span
Panel stiffening	Where applicable	Single measurements

5.2 Deck structure

Structural member	Extent of measurement	Pattern of measurement
Deck plating	Two transverse bands across tank	Minimum of three measurements per plate per band
Deck longitudinals	Every third longitudinal in each of two bands with a minimum of one longitudinal	Three measurements in line vertically on webs and two measurements on flange (if fitted)
Deck girders and brackets	At fore and aft transverse bulkhead, bracket toes and in centre of tanks	Vertical line of single measurements on web plating with one measurement between each panel stiffener, or a minimum of three measurements. Two measurements across flange. Five-point pattern on girder/bulkhead brackets
Deck transverse webs	Minimum of two webs, with measurements at both ends and middle of span	Five-point pattern over 1 m^2 area. Single measurements on flange
Vertical web and transverse bulkhead in wing ballast tank for double hull design (2 m from deck)	Minimum of two webs, and both transverse bulkheads	Five-point pattern over 1 m^2 area
Panel stiffening	Where applicable	Single measurements

5.3 Side shell and longitudinal bulkheads

Structural member	Extent of measurement	Pattern of measurement
Side shell and longitudinal bulkhead plating: - Deckhead and bottom strakes, and strakes in way of horizontal girders - all other strakes	- Plating between each pair of longitudinals in a minimum of three bays (along the tank) - Plating between every third pair of longitudinals in same three bays	- Single measurement - Single measurement
Side shell and longitudinal bulkhead longitudinals on:		
- deckhead and bottom strakes	- Each longitudinal in same three bays	- Three measurements across web and one measurement on flange
- all other strakes	- Each third longitudinal in same three bays	- Three measurements across web and one measurement on flange
Longitudinals - brackets	Minimum of three at top, middle and bottom of tank in same three bays	Five-point pattern over area of bracket
Vertical web and transverse bulkheads (excluding deck area): - strakes in way of horizontal girders - other strakes	- Minimum of two webs and both transverse bulkheads - Minimum of two webs and both transverse bulkheads	- Five-point pattern over approximately 2 m^2 area - Two measurements between each pair of vertical stiffeners
Web frames and cross ties for other tanks than double side tanks	Three webs with minimum of three locations on each web, including in way of cross tie connections and lower end bracket	Five-point pattern over approximately 2 m^2 area of webs, plus single measurements on flanges of web frame and cross ties
Horizontal girders	Plating on each girder in a minimum of three bays	Two measurements between each pair of longitudinal girder stiffeners
Panel stiffening	Where applicable	Single measurements

5.4 Transverse watertight and swash bulkheads in cargo tanks

Structural member	Extent of measurement	Pattern of measurement
Upper and lower stool, where fitted	- Transverse band within 25 mm of welded connection to inner bottom/deck plating - Transverse band within 25 mm of welded connection to shelf plate	Five-point pattern between stiffeners over 1 m length
Deckhead and bottom strakes, and strakes in way of horizontal stringers	Plating between pair of stiffeners at three locations: approximately ¼, ½ and ¾ width of tank	Five-point pattern between stiffeners over 1 m length
All other strakes	Plating between pair of stiffeners at middle location	Single measurement
Strakes in corrugated bulkheads	Plating for each change of scantling at centre of panel and at flange of fabricated connection	Five-point pattern over approximately 1 m^2 of plating
Stiffeners	Minimum of three typical stiffeners	For web, five-point pattern over span between bracket connections (two measurements across web at each bracket connection and one at centre of span) For flange, single measurements at each bracket toe and at centre of span

Continued from previous table

Structural member	Extent of measurement	Pattern of measurement
Brackets	Minimum of three at top, middle and bottom of tank	Five-point pattern over area of bracket
Horizontal stringers	All stringers with measurements at both ends and middle	Five-point pattern over 1 m^2 area, plus single measurements near bracket toes and on flanges
Deep web and girders	Measurements at toe of bracket and at centre of span	For web, five-point patter over about 1 m^2. Three measurements across the face flat

B.6 Guidelines for the Gauging of the Vertically Corrugated Transverse Watertight Bulkhead Between Holds No. 1 and 2

1. Gauging is necessary to determine the general condition of the structure and to define the extent of possible repairs and/or reinforcements of the vertically corrugated transverse watertight bulkhead for verification of the compliance with Rules for Hull (Pt.1, Vol.II) Sec.23.J.

2. Taking into account the buckling model specified in Rules for Hull (Pt.1, Vol.II) Sec.23.J, in the evaluation of strength of the bulkhead, it is essential to determine the thickness diminution at the critical levels shown in Fig. B.6.1 and Fig. B.6.2 of this annex.

3. The gauging should be carried out at the levels as described below. To adequately assess the scantlings of each individual vertical corrugation, each corrugation flange, web, shedder plate and gusset plate within each of the levels given below should be gauged.

Level (a) **Ships without lower stool** (see Fig. B.6.1):

Locations:

— The mid-breadth of the corrugation flanges at approximately 200 mm above the line of shedder plates;

— The middle of gusset plates between corrugation flanges, where fitted;

— The middle of the shedder plates;

— The mid-breadth of the corrugation webs at approximately 200 mm above the line of shedder plates.

Level (b) **Ships with lower stool** (see Fig. B.6.2):

Locations:

— The mid-breadth of the corrugation flanges at approximately 200 mm above the line of shedder plates;

— The middle of gusset plates between corrugation flanges, where fitted;

— The middle of the shedder plates;

— The mid-breadth of the corrugation webs at approximately 200 mm above the line of shedder plates.

Level (c) **Ships with or without lower stool** (see Fig. B.6.1 and Fig. B.6.2):

Locations:

— The mid-breadth of the corrugation flanges and webs at about the mid-height of the corrugation.

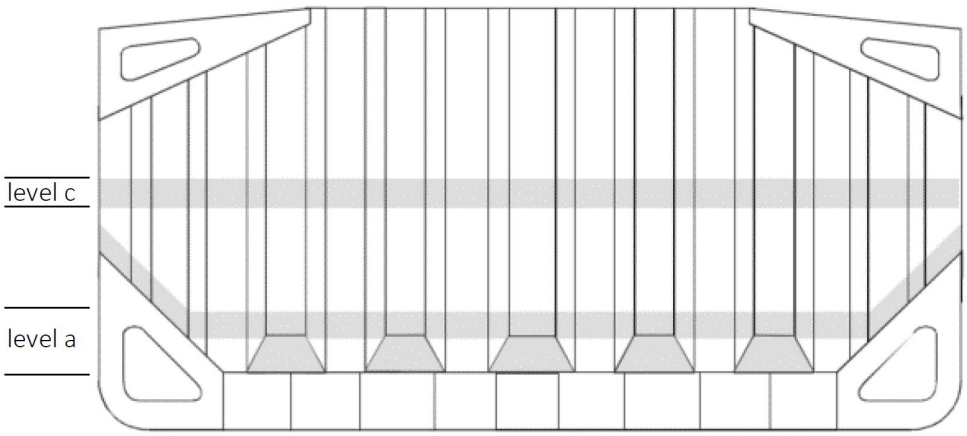

Fig. B.6.1 Ships without lower stool

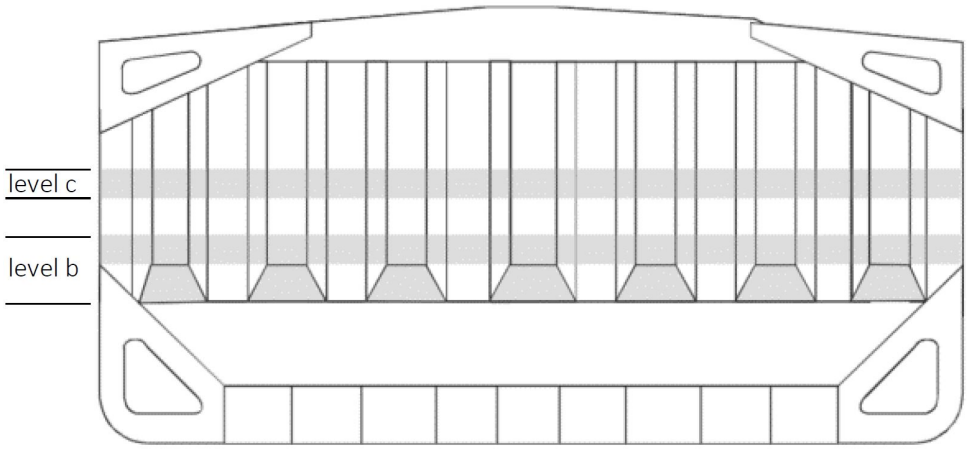

Fig. B.6.2 Ships with lower stool

4. Where the thickness changes within the horizontal levels, the thinner plate should be gauged.

5. Renewal/reinforcement shall be done in accordance with the following requirements (see Note 1).

1) Steel renewal is required where the gauged thickness is less than t_{net} + 0,5 mm, t_{net} being the thickness used for the calculation of bending capacity and shear stresses as given in Rules for Hull (Pt.1, Vol.II) Sec.23.J.4.2. or the local net plate thickness as given in Rules for Hull (Pt.1, Vol.II) Sec.23.J.4.7. Alternatively, reinforcing doubling strips may be used providing the net thickness is not dictated by shear strength requirements for web plates (see Rules for Hull (Pt.1, Vol.II) Sec.23.J.4.5 and Rules for Hull (Pt.1, Vol.II) Sec.23.J.4.6.2) or by local pressure requirements for web and flange plates (see Rules for Hull (Pt.1, Vol.II) Sec.23.J.4.7).

2) Where the gauged thickness is within the range t_{net} + 0,5 mm and t_{net} + 1,0 mm, coating (applied in accordance with the coating manufacturer's requirements) or annual gauging may be adopted as an alternative to steel renewal.

Note 1 :

See also Annex UR S19, Rev.5:

Annex 1 : Guidance on Renewal/Reinforcement of Vertically Corrugated Transverse Watertight Bulkhead Between Cargo Holds Nos. 1 And 2.

Annex 2 : Guidance to Access Capability of Carriage Of High Density Cargoes on Existing Bulk Carriers According to The Strength of Transvers Bulkhead Between Cargo Holds Nos.1 And 2.

3) Where steel renewal or reinforcement is required, a minimum thickness of t_{net} + 2,5 mm is to be replenished for the renewed or reinforced parts.

4) When:

$0{,}8\cdot(R_{eH}\cdot t_{fl}) \geq R_{eh,2}\cdot t_{st}$

where:

$R_{eH,1}$	=	minimum upper yield stress, in N/mm^2, of the material used for the corrugation flanges
$R_{eh,2}$	=	minimum upper yield stress, in N/mm^2, of the material used for the lower stool side plating or floors (if no stool is fitted)
t_{fl}	=	flange thickness, in mm, which is found to be acceptable on the basis of the criteria specified in a) above or, when steel renewal is required, the replenished thickness according to the criteria specified in b) above. The above flange thickness dictated by local pressure requirements (see Rules for Hull (Pt.1, Vol.II), Sec.23.J.4.7) need not be considered for this purpose
t_{st}	=	as built thickness, in mm, of the lower stool side plating or floors (if no stool is fitted)

Gussets with shedder plates, extending from the lower end of corrugations up to $0{,}1\cdot\ell$ or reinforcing doubling strips (on bulkhead corrugations and stool side plating) are to be fitted.

If gusset plates are fitted, the material of such gusset plates is to be the same as that of the corrugation flanges. The gusset plates are to be connected to the lower stool shelf plate or inner bottom (if no lower stool is fitted) by deep penetration welds (see Fig. B.6.3).

5) Where steel renewal is required, the bulkhead connections to the lower stool shelf plate or inner bottom (if no stool is fitted) are to be at least made by deep penetration welds (see Fig. B.6.3).

6) Where gusset plates are to be fitted or renewed, their connections with the corrugations and the lower stool shelf plate or inner bottom (if no stool is fitted) are to be at least made by deep penetration welds (see Fig. B.6.3).

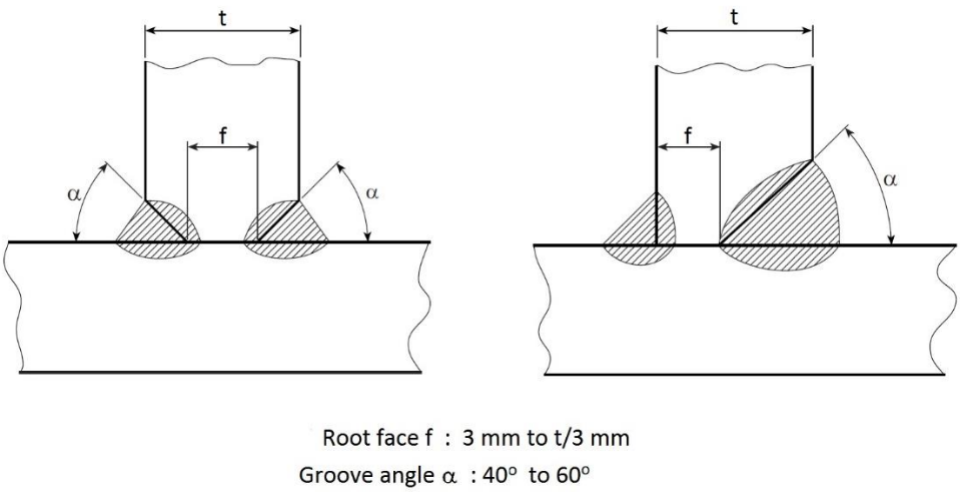

Fig. B.6.3 Connection by deep penetration welds

B.7 Guidelines for the Thickness Measurements of Side Shell Frames and Brackets in Single-Side Skin Bulk Carriers Required to Comply with URS 31

1. General

Thickness measurements should be conducted to determine the general condition of the structure and to define the extent of possible steel renewals or other measures for the webs and flanges of side shell frames and brackets for verification of the compliance with URS 31 (adopted in Annex B.11).

2. Zones of side shell frames and brackets

2.1 For the purpose of steel renewal, sand blasting and coating, four zones A, B, C and D are defined as shown in Fig. B.7.1.

2.2 Zones A and B should be considered the most critical zones.

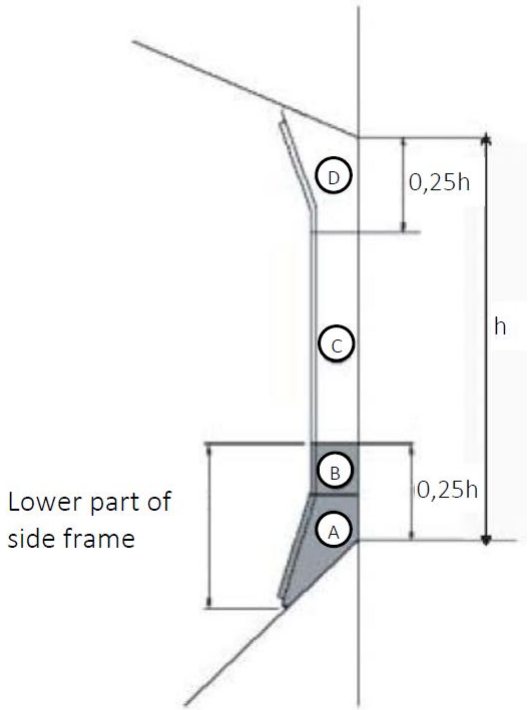

Fig. B.7.1 Zones of side shell frames and brackets

3. Pitting and grooving

3.1 Pits can grow in a variety of shapes, some of which should be ground before assessment.

3.2 Pitting corrosion may be found under coating blisters, which should be removed before inspection.

3.3 To measure the remaining thickness of pits or grooving the normal ultrasonic transducer (generally 10 mm diameter) will not suffice. A miniature transducer (3 to 5 mm diameter) should be used. Alternatively, the firm conducting the thickness measurement should use a pit gauge to measure the depth of the pits and grooving and calculate the remaining thickness.

3.4 Assessment based upon area

This is the method specified in paragraph 2.5 of annex 2 to resolution MSC.168 (79) and is based upon the intensity determined from Fig.B.7.2 below.

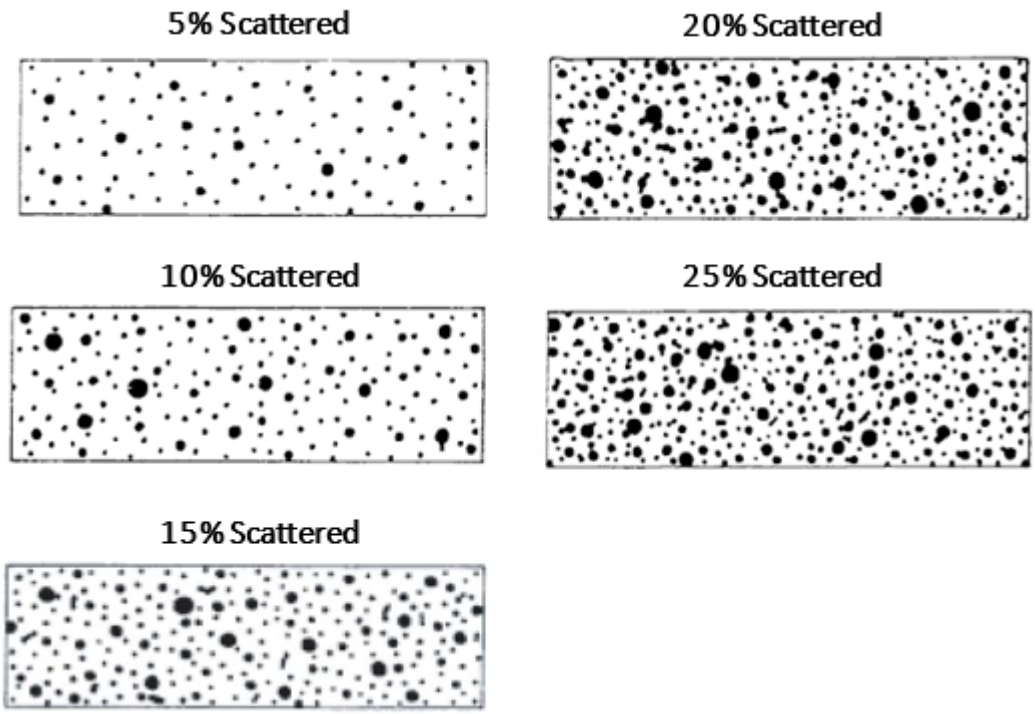

Fig. B.7.2 Pitting intensity diagrams (from 5 to 25 % intensity)

3.5 If pitting intensity is higher than 15 percent in an area (see Fig.B.7.2), then thickness measurements should be taken to determine the extent of the pitting corrosion. The 15 per cent is based upon pitting or grooving on only one side of the plate.

3.6 In cases where pitting is evident as defined above (exceeding 15%) then an area of 300 mm diameter or more (or, where this is impracticable on the frame flange or the side shell, hopper tank plating or topside tank plating attached to the side frame, an equivalent rectangular area), at the most pitted part, should be cleaned to bare metal, and the thickness measured in way of the five deepest pits within the cleaned area. The least thickness measured in way of any of these pits is to be taken as the thickness to be recorded.

3.7 The minimum acceptable remaining thickness in any pit or groove is equal to:

3.7.1 75 per cent of the as built thickness, for pitting or grooving in the cargo hold side frame webs and flanges.

3.7.2 70 per cent of the as built thickness, for pitting or grooving in the side shell, hopper tank and topside tank plating attached to the cargo hold side frame, over a width up to 30 mm from each side of it.

4. Thickness measurement methodology

4.1 Numbers of side frames to be measured should be equivalent to those of the class renewal survey or intermediate survey corresponding to the ship's age. Representative thickness measurements should be taken for each zone as specified below.

4.2 Special consideration to the extent of the thickness measurements may be given by the Administration or organization recognized by the Administration, if the structural members show no thickness diminution with respect to the as built thicknesses and the coating is found in "as new" condition (i.e. without breakdown or rusting).

4.3 Where thickness measurement readings close to the criteria are found, the number of hold frames to be measured should be increased.

4.4 If renewal or other measures according to resolution MSC.168 (79) should be applied on individual frames in a hold, then all frames in that hold should have thickness measurements taken.

4.5 There is a variety of construction methods used for side shell frames in bulk carriers. Some have faceplates (T sections) on the side shell frames, some have flanged plates and some have bulb plates. The use of faceplates and flanged sections is considered similar for thickness measurement purposes in that both the web and faceplate or web and flange plate should be measured. If bulb plate has been used, then web of the bulb plate should be measured in the normal manner and the sectional modulus should be specially considered if required.

4.6 Gauging's for Zones A, B and D (Web plating)

The pattern for thickness measurements in Zones A, B and D should be a five-point pattern. See Fig. B.7.3. The five-point pattern should be over the depth of the web and the same area vertically. The thickness measurement report should reflect the average reading.

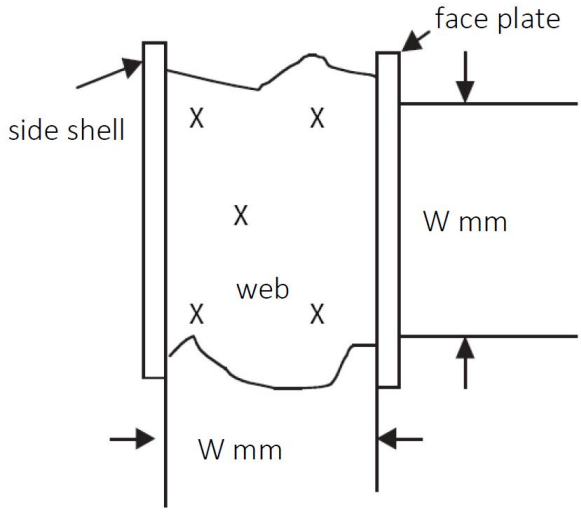

Fig. B.7.3 Typical five-point pattern on the web plate

4.7 Thickness measurements for Zone C (Web plating)

Depending on the condition of the web in way of Zone C, the web may be measured by taking three readings over the length of Zone C and averaging them. The average reading should be compared with the allowable thickness. If the web plating has general corrosion then this pattern should be expanded to a five-point pattern as noted above.

4.8 Thickness measurements for section a) and b) (flanges and side shell plating)

Where the lower bracket length or depth does not meet the requirements in annex 1 to resolution MSC.168(79), thickness measurements should be taken at sections a) and b) to calculate the actual section modulus required in paragraph 3.4 of annex 2 to resolution MSC.168(79) (see Fig.B.7.4). At least two readings on the flange/faceplate should be taken on each side of the frame (i.e. fore and aft) in way of section a) and section b).

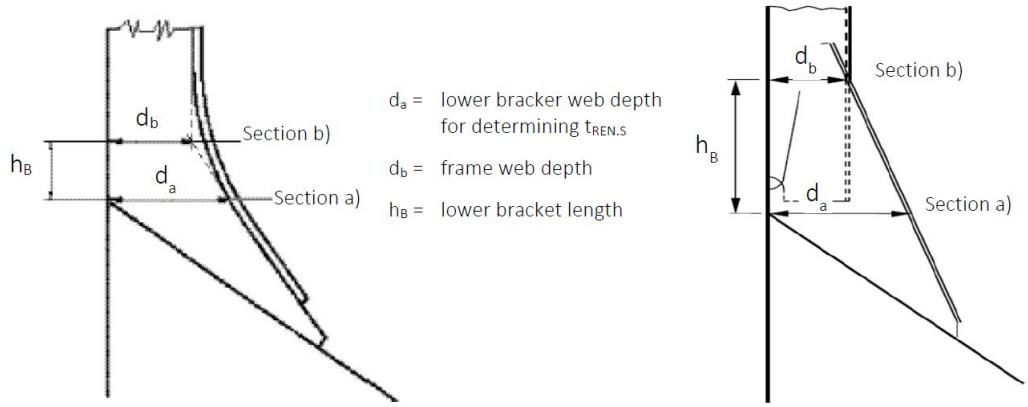

Fig. B.7.4 Sections a) and b)

B.8 Additional Annual Survey Requirements for the Foremost Cargo Hold of Ships Subject to Regulation XII/9 of the Convention

1. General

In the case of bulk carriers over five years of age, the annual survey should include, in addition to the requirements of the annual surveys prescribed in chapter 3 of the ESP Code, an examination of the following items.

2. Extent of survey

2.1 For bulk carriers of 5 to 15 years of age

2.1.1 An overall survey of the foremost cargo hold, including close-up survey of sufficient extent, minimum 25 per cent of frames, should be carried out to establish the condition of:

— shell frames including their upper and lower end attachments, adjacent shell plating, and transverse bulkheads; and

— areas found to be suspect areas at the previous class renewal survey.

2.1.2 Where considered necessary by the surveyor as a result of the overall and close-up survey as described in 2.1.1 above, the survey should be extended to include a close-up survey of all of the shell frames and adjacent shell plating of the cargo hold.

2.2 For bulk carriers exceeding 15 years of age

An overall survey of the foremost cargo hold, including close-up survey should be carried out to establish the condition of:

— all shell frames including their upper and lower end attachments, adjacent shell plating, and transverse bulkheads; and

— areas found to be suspect areas at the previous class renewal survey.

— Extent of thickness measurement

2.2.1 Thickness measurement should be carried out to an extent sufficient to determine both general and local corrosion levels at areas subject to close-up survey, as described in 2.1 and 2.2 above. The minimum requirement for thickness measurements are areas found to be suspect areas at the previous class renewal survey. Where substantial corrosion is found, the extent of thickness measurements should be increased with the requirements of Annex B.5.

2.2.2 The thickness measurement may be dispensed with provided the surveyor is satisfied by the close-up survey, there is no structural diminution and the protective coating, where applied, remains effective.

3. Special consideration

Where the protective coating, as referred to in the explanatory note below, in the foremost cargo hold is found to be in GOOD condition, the extent of close-up surveys and thickness measurements may be specially considered.

Explanatory note:

For existing bulk carriers, where owners may elect to coat or recoat cargo holds as noted above, consideration may be given to the extent of the close-up and thickness measurement surveys. Prior to the coating of cargo holds of existing ships, scantlings should be ascertained in the presence of a surveyor.

B.9 Strength of Cargo Hatch Cover Securing Arrangements for Bulk Carriers

See Rules for Hull (Pt.1, Vol.II) Sec.17.F.

B.10 Criteria for Longitudinal Strength of Hull Girder for Oil Tankers

A. General

1.1 These criteria are to be used for the evaluation of longitudinal strength of the ship's hull girder as required by Section 4, I.A.12.1.2.

1.2 In order that ship's longitudinal strength to be evaluated can be recognized as valid, fillet welding between longitudinal internal members and hull envelopes are to be in sound condition so as to keep integrity of longitudinal internal members with hull envelopes.

B. Evaluation of longitudinal strength

On oil tankers of 130 m in length and upwards and of over 10 years of age, the longitudinal strength of the ship's hull girder is to be evaluated in compliance with the requirements of this annex on the basis of the thickness measured, renewed or reinforced, as appropriate, during the special survey.

The condition of the hull girder for longitudinal strength evaluation is to be determined in accordance with the methods specified in C.

2.1 Calculation of transverse sectional areas of deck and bottom flanges of hull girder

2.1.1 The transverse sectional areas of deck flange (deck plating and deck longitudinals) and bottom flange (bottom shell plating and bottom longitudinals) of the ship's hull girder are to be calculated by using the thickness measured, renewed or reinforced, as appropriate, during the special survey.

2.1.2 If the diminution of sectional areas of either deck or bottom flange exceeds 10% of their respective as-built area (i.e. original sectional area when the ship was built), either one of the following measures is to be taken:

1) to renew or reinforce the deck or bottom flanges so that the actual sectional area is not less than 90% of the as-built area; or

2) to calculate the actual section moduli (W_{act}) of transverse section of the ship's hull girder by applying the calculation method specified in Rules for Hull (Pt.1, Vol.II) Sec.5.C.4, by using the thickness measured, renewed or reinforced, as appropriate, during the special survey.

2.2 Requirements for transverse section modulus of hull girder

2.2.1 The actual section moduli of transverse section of the ship's hull girder calculated in accordance with the foregoing 2.1.2.2) is not to be less than the requirements given in Annex A.3.

C. Sampling method of thickness measurements for longitudinal strength evaluation and repair methods

1. Extent of longitudinal strength evaluation

Longitudinal strength should be evaluated within 0,4**L** amidships for the extent of the hull girder length that contains tanks therein and within 0,5**L** amidships for adjacent tanks which may extend beyond 0,4L amidships, where tanks means ballast tanks and cargo tanks.

2. Sampling method of thickness measurement

2.1 Pursuant to the requirements of Section 4-I, B.4.5 or Section 4-I, C.4.5 for Oil Tanker and Double Hull Oil Tankers subsequently, transverse sections should be chosen such that thickness measurements can be taken for as many different tanks in corrosive environments as possible, e.g. ballast tanks sharing a common plane boundary with cargo tanks fitted with heating coils, other ballast tanks, cargo tanks permitted to be filled with sea water and other cargo tanks. Ballast tanks sharing a common plane boundary with cargo tanks fitted with heating coils and cargo tanks permitted to be filled with sea water should be selected where present.

2.2 The minimum number of transverse sections to be sampled should be in accordance with Table 4-I.2 or Table 4-I.5 for Oil Tanker and Double Hull Oil Tankers subsequently. The transverse sections should be located where the largest thickness reductions are suspected to occur or are revealed from deck and bottom plating measurements prescribed in 2.3 and should be clear of areas which have been locally renewed or reinforced.

2.3 At least two points should be measured on each deck plate and/or bottom shell plate required to be measured within the cargo area in accordance with the requirements of Table 4-I.2 or Table 4-I.5 for Oil Tanker and Double Hull Oil Tankers subsequently.

2.4 Within 0,1**H** (where **H** is the ship's moulded depth) of the deck and bottom at each transverse section to be measured in accordance with the requirements of Table 4-I.2 or Table 4-I.5 for Oil Tanker and Double Hull Oil Tankers subsequently, every longitudinal and girder should be measured on the web and face plate, and every plate should be measured at one point between longitudinals.

2.5 For longitudinal members other than those specified in 2.4 to be measured at each transverse section in accordance with the requirements of Table 4-I.2 or Table 4-I.5 for Oil Tanker and Double Hull Oil Tankers subsequently, every longitudinal and girder should be measured on the web and face plate, and every plate should be measured at least in one point per strake.

2.6 The thickness of each component should be determined by averaging all of the measurements taken in way of the transverse section on each component.

3. Additional measurements where the longitudinal strength is deficient

3.1 Where one or more of the transverse sections are found to be deficient in respect of the longitudinal strength requirements given in this annex, the number of transverse sections for thickness measurement should be increased such that each tank within the 0,5**L** amidships region has been sampled. Tank spaces that are partially within, but extend beyond, the 0,5**L** region, should be sampled.

3.2 Additional thickness measurements should also be performed on one transverse section forward and one aft of each repaired area to the extent necessary to ensure that the areas bordering the repaired section also comply with the requirements of Section 4-I for Oil Tanker or Double Hull Oil Tankers as applicable.

4. Effective repair methods

4.1 The extent of renewal or reinforcement carried out to comply with this annex should be in accordance with 4.2.

4.2 The minimum continuous length of a renewed or reinforced structural member should be not less than twice the spacing of the primary members in way. In addition, the thickness diminution in way of the butt joint of each joining member forward and aft of the replaced member (plates, stiffeners, girder webs and flanges, etc.) should not be within the substantial corrosion range (75% of the allowable diminution associated with each particular member). Where differences in thickness at the butt joint exceed 15% of the lower thickness, a transition taper should be provided.

4.3 Alternative repair methods involving the fitting of straps or structural member modification should be subject to special consideration. In considering the fitting of straps, it should be limited to the following conditions:

1) to restore and/or increase longitudinal strength;
2) the thickness diminution of the deck or bottom plating to be reinforced should not be within the substantial corrosion range (75% of the allowable diminution associated with the deck plating);
3) the alignment and arrangement, including the termination of the straps, is in accordance with a standard recognized by BKI;
4) the straps are continuous over the entire 0,5**L** amidships length; and
5) continuous fillet welding and full penetration welds are used at butt welding and, depending on the width of the strap, slot welds. The welding procedures applied should be acceptable to the BKI.

4.4 The existing structure adjacent to replacement areas and in conjunction with the fitted straps, etc. should be capable of withstanding the applied loads, taking into account the buckling resistance and the condition of welds between the longitudinal members and hull envelope plating.

B.11 Renewal Criteria for Side Shell Frames and Brackets in Single Side Skin Bulk Carriers and Single Side Skin OBO Carriers not Built in accordance with UR S12 Rev.1 or subsequent revisions (UR S31)

1. Application and definitions

These requirements apply to the side shell frames and brackets of cargo holds bounded by the single side shell of bulk carriers constructed with single deck, topside tanks and hopper tanks in cargo spaces intended primarily to carry dry cargo in bulk, which were not built in accordance with UR S12 Rev. 1 or subsequent revisions.

In addition, these requirements also apply to the side shell frames and brackets of cargo holds bounded by the single side shell of Oil/Bulk/Ore (OBO) carriers, as defined in Annex A.7 but of single side skin construction.

In the case a vessel as defined above does not satisfy above definition in one or more holds, the requirements in this sub section do not apply to these individual holds.

For the purpose of this sub section, “ships” means both “bulk carriers” and “OBO carriers” as defined above, unless otherwise specified.

Bulk Carriers and OBO carriers subject to these requirements are to be assessed for compliance with the requirements of this sub section and steel renewal, reinforcement or coating, where required in accordance with this sub section, is to be carried out in accordance with Section 4, I.E.1.2.3.

These requirements define steel renewal criteria or other measures to be taken for the webs and flanges of side shell frames and brackets as per 2.

Reinforcing measures of side frames are also defined as per 2.3.

Finite element or other numerical analysis or direct calculation procedures cannot be used as an alternative to compliance with the requirements of this sub section, except in cases of unusual side structure arrangements or framing to which the requirements of this sub section cannot be directly applied. In such cases, the analysis criteria and the strength check criteria are to be in accordance with BKI Rules.

1.1 Ice strengthened ships

1.1.1 Where ships are reinforced to comply with an ice class notation, the intermediate frames are not to be included when considering compliance with this sub section.

1.1.2 The renewal thicknesses for the additional structure required to meet the ice strengthening notation are to be based on the BKI requirements.

1.1.3 If the ice class notation is requested to be withdrawn, the additional ice strengthening structure, with the exception of tripping brackets (see 2.1.2.1.b and 2.3), is not to be considered to contribute to compliance with this sub section.

2. Renewal or other measures

2.1 Criteria for renewal or other measures

2.1.1 Symbols

t_M = thickness as measured [mm]
t_{REN} = thickness at which renewal is required, See 2.1.2
$t_{REN\ d/t}$ = thickness criteria based on d/t ratio, See 2.1.2.1
$t_{REN\ S}$ = thickness criteria based on strength, See 2.1.2.2
t_{COAT} = $0,75 \cdot t_W$
t_W = thickness in mm as required by Rules for Hull (Pt.1, Vol. II) Sec.23.B.5.2
t_{AB} = thickness as built [mm]
t_C = See Table B.11.1 below

Table B.11.1 t_C values, in mm

Ship's length L, in m	Holds other than No. 1		Hold No. 1 Ship's	
	Span and upper brackets	Lower brackets	Span and upper brackets	Lower brackets
$\leq$ 100	2,0	2,5	2,0	3,0
150	2,0	3,0	3,0	3,5
$\geq$ 200	2,0	3,0	3,0	4,0
Note: For intermediate ship lengths, t_c is obtained by linear interpolation between the above values.				

2.1.2 Criteria for webs (Shear and other checks)

The webs of side shell frames and brackets are to be renewed when the measured thickness (t_M) is equal to or less than the thickness (t_{REN}) as defined below:

t_{REN} is the greatest of:

— t_{COAT} - t_C

— 0,75 t_{AB}

— $t_{REN,d/t}$ (applicable to Zone A and B only), see Fig.B.11.1

— $t_{REN,S}$ (where required by 2.1.2.2)

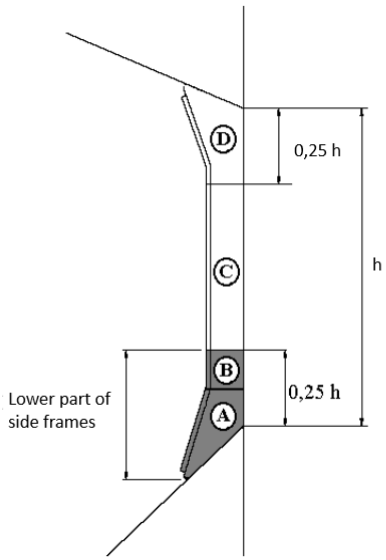

Fig. B.11.1 Lower part and zones of side frames

.1 Thickness criteria based on d/t ratio

Subject to b) and c) below, $t_{REN,d/t}$ is given by the following equation:

$t_{REN,d/t}$ = (web depth in mm)/R

where:

R = for frames:
- $65\ k^{0,5}$ for symmetrically flanged frames
- $55\ k^{0,5}$ for asymmetrically flanged frames

for lower brackets (see a) below):
- $87\ k^{0,5}$ for symmetrically flanged frames
- $73\ k^{0,5}$ for asymmetrically flanged frames

k = 1,0 for ordinary hull structural steel and according to Table B.11.1 for higher tensile steel

In no instance is tREN,d/t for lower integral brackets to be taken as less than $t_{REN,d/t}$ for the frames they support.

a) Lower brackets

Lower brackets are to be flanged or face plate is to be fitted, ref. 2.1.3.

In calculating the web depth of the lower brackets, the following will apply:

— The web depth of lower bracket may be measured from the intersection of the sloped bulkhead of the hopper tank and the side shell plate, perpendicularly to the face plate of the lower bracket (see Fig. B.11.2).

— Where stiffeners are fitted on the lower bracket plate, the web depth may be taken as the distance between the side shell and the stiffener, between the stiffeners or between the outermost stiffener and the face plate of the brackets, whichever is the greatest.

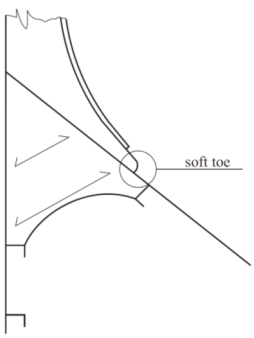

Fig. B.11.2 Connecting bracket in the hopper tank

b) Tripping bracket alternative

When t_M is less than $t_{REN,d/t}$ at section b of the side frames, tripping brackets in accordance with 2.3 may be fitted as an alternative to the requirements for the web depth to thickness ratio of side frames, in which case $t_{REN,d/t}$ may be disregarded in the determination of t_{REN} in accordance with 2.1.2. The value of t_M is to be based on zone B according to Annex B.7, see Fig. B.11.1.

c) Immediately abaft collision bulkhead

For the side frames, including the lower bracket, located immediately abaft the collision bulkheads, whose scantlings are increased in order that their moment of inertia is such to avoid undesirable flexibility of the side shell, when their web as built thickness t_{AB} is greater than $1{,}65 \cdot t_{REN,S}$, the thickness $t_{REN,d/t}$ may be taken as the value $t'_{REN,d/t}$ obtained from the following equation:

$$t'_{REN,d/t} = \sqrt[3]{t^2_{REN,d/t} t_{REN,S}}$$

where $t_{REN,S}$ is obtained from 3.3

.2 Thickness criteria based on shear strength check

Where t_M in the lower part of side frames, as defined in Fig. B.11.1, is equal to or less than t_{COAT}, $t_{REN,S}$ is to be determined in accordance with 3.3.

.3 Thickness of renewed webs of frames and lower brackets

Where steel renewal is required, the renewed webs are to be of a thickness not less than t_{AB}, $1{,}2 \cdot t_{COAT}$ or $1{,}2 \cdot t_{REN}$, whichever is the greatest.

.4 Criteria for other measures

When $t_{REN} < t_M \leq t_{COAT}$, measures are to be taken, consisting of all the following:

a) Sand blasting, or equivalent, and coating (see 2.2).

b) Fitting tripping brackets (see 2.3), when the above condition occurs for any of the side frame zones A, B, C and D, shown in Fig. B.11.1. Tripping brackets not connected to flanges are to have soft toe, and the distance between the bracket toe and the frame flange is not to be greater than about 50 mm, see Fig. B.11.3.

c) Maintaining the coating in "as-new" condition (i.e. without breakdown or rusting) at Class Renewal Survey and Intermediate Surveys.

The above measures may be waived if the structural members show no thickness diminution with respect to the as built thicknesses and coating is in "as-new" condition (i.e. without breakdown or rusting).

When the measured frame webs thickness t_M is such that $t_{REN} < t_M \leq t_{COAT}$ and the coating is in **GOOD** condition, sand blasting and coating as required in a) above may be waived even if not found in "as-new" condition, as defined above, provided that tripping brackets are fitted and the coating damaged in way of the tripping bracket welding is repaired.

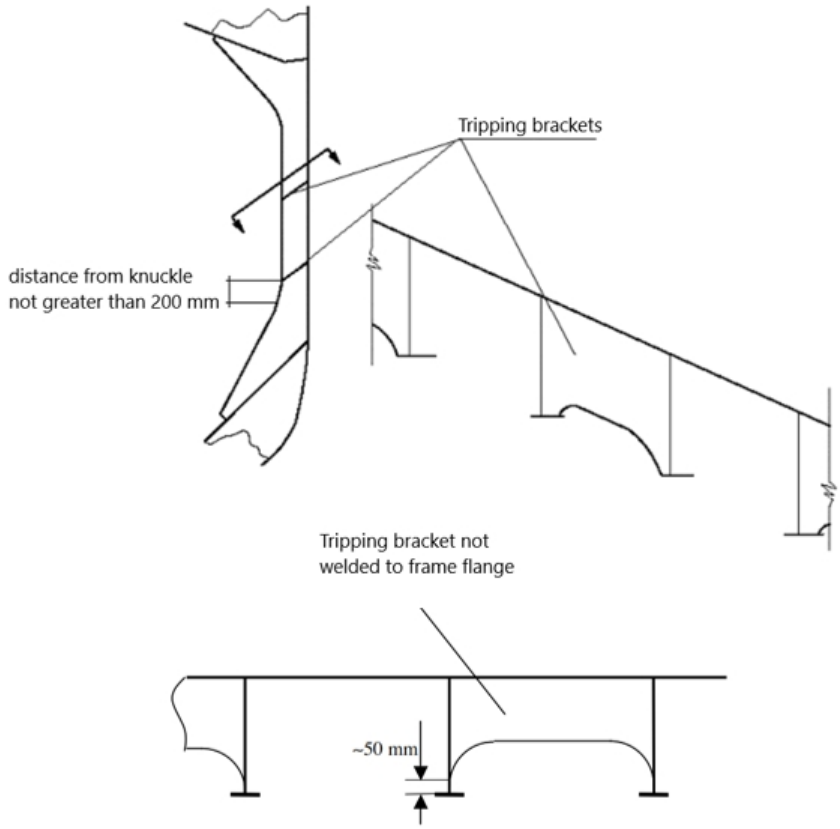

Fig. B.11.3 Tripping Bracket

2.1.3 Criteria for frames and brackets (Bending check)

When lower end brackets were not fitted with flanges at the design stage, flanges are to be fitted so as to meet the bending strength requirements in 3.4. The full width of the bracket flange is to extend up beyond the point at which the frame flange reaches full width. Adequate back-up structure in the hopper is to be ensured, and the bracket is to be aligned with the back-up structure.

Where the length or depth of the lower bracket does not meet the requirements in Rules for Hull (Pt.1, Vol. II) Sec.23.B.5.2 a bending strength check in accordance with 3.4 is to be carried out and renewals or reinforcements of frames and/or brackets effected as required therein.

The bending check needs not to be carried out in the case the bracket geometry is modified so as to comply with Rules for Hull (Pt.1, Vol. II) Sec.23.B.5.2 requirements.

2.2 Thickness measurements, steel renewal, sand blasting and coating

For the purpose of steel renewal, sand blasting and coating, four zones A, B, C and D are defined, as shown in Fig.B.11.1. When renewal is to be carried out, surface preparation and coating are required for the renewed structures as given in Rules for Hull (Pt.1, Vol. II) Sec.38.G for cargo holds of new buildings.

Representative thickness measurements are to be taken for each zone and are to be assessed against the criteria in 2.1.

When zone B is made up of different plate thicknesses, the lesser thickness is to be used for the application of the requirements in this sub section.

In case of integral brackets, when the criteria in 2.1 are not satisfied for zone A or B, steel renewal, sand blasting and coating, as applicable, are to be done for both zones A and B.

In case of separate brackets, when the criteria in 2.1 are not satisfied for zone A or B, steel renewal, sand blasting and coating is to be done for each one of these zones, as applicable.

When steel renewal is required for zone C according to 2.1, it is to be done for both zones B and C. When sand blasting and coating is required for zone C according to 2.1, it is to be done for zones B, C and D.

When steel renewal is required for zone D according to 2.1, it needs only to be done for this zone. When sand blasting and coating is required for zone D according to 2.1, it is to be done for both zones C and D.

Special consideration may be given by BKI to zones previously renewed or re-coated, if found in "as-new" condition (i.e., without breakdown or rusting).

When adopted, on the basis of the renewal thickness criteria in 2.1, in general coating is to be applied in compliance with the requirements of Rules for Hull (Pt.1, Vol. II) Sec.38.G, as applicable.

Where, according to the requirements in 2.1, a limited number of side frames and brackets are shown to require coating over part of their length, the following criteria apply.

a) The part to be coated includes:

   — the web and the face plate of the side frames and brackets,
   — the hold surface of side shell, hopper tank and topside tank plating, as applicable, over a width not less than 100 mm from the web of the side frame.

b) Epoxy coating or equivalent is to be applied.

In all cases, all the surfaces to be coated are to be sand blasted prior to coating application.

When flanges of frames or brackets are to be renewed according to this sub section, the outstanding breadth to thickness ratio is to comply with the requirements in Rules for Hull (Pt.1, Vol.II) Sec.23.B.5.2.

2.3 Reinforcing measures

Reinforcing measures are constituted by tripping brackets, located at the lower part and at midspan of side frames (see Fig. B.11.3). Tripping brackets may be located at every two frames, but lower and midspan brackets are to be fitted in line between alternate pairs of frames.

The thickness of the tripping brackets is to be not less than the as-built thickness of the side frame webs to which they are connected.

Double continuous welding is to be adopted for the connections of tripping brackets to the side shell frames and shell plating.

Where side frames and side shell are made of Higher Strength Steel, Normal Strength Steel tripping brackets may be accepted, provided the electrodes used for welding are those required for the particular Higher Strength Steel grade, and the thickness of the tripping brackets is equal to the frame web thickness, regardless of the frame web material.

2.4 Weld throat thickness

In case of steel renewal the welded connections are to comply with Rules for Hull (Pt.1, Vol. II) Sec.23. B.5.4.

2.5 Pitting and grooving

Criteria for pitting and grooving see Annex B.7.3.

2.6 Renewal of all frames in one or more cargo holds

When all frames in one or more holds are required to be renewed according to this sub section, the compliance with the requirements in Rules for Hull (Pt.1, Vol. II) Sec.23.B.5 may be accepted in lieu of the compliance with the requirements in this sub section, provided that:

— It is applied at least to all the frames of the hold(s)

— The coating requirements for side frames of “new ships” are complied with

— The section modulus of side frames is calculated according to BKI Rules.

2.7 Renewal of damaged frames

In case of renewal of a damaged frame already complying with this sub section, the following requirements apply:

— The conditions accepted in compliance with this sub section are to be restored as a minimum.

— For localised damages, the extension of the renewal is to be carried out according to the standard practice of BKI.

3. Strength check criteria

In general, loads are to be calculated and strength checks are to be carried out for the aft, middle and forward frames of each hold. The scantlings required for frames in intermediate positions are to be obtained by linear interpolation between the results obtained for the above frames.

When scantlings of side frames vary within a hold, the required scantlings are also to be calculated for the mid frame of each group of frames having the same scantlings. The scantlings required for frames in intermediate positions are to be obtained by linear interpolation between the results obtained for the calculated frames.

3.1 Load model

The following loading conditions are to be considered:

— Homogeneous heavy cargo (density greater than 1,78 t/m^3)

— Homogeneous light cargo (density less than 1,78 t/m^3)

— Non homogeneous heavy cargo, if allowed

— Multiport loading/unloading conditions need not be considered.

3.1.1 Forces

The forces $P_{fr,a}$ and $P_{fr,b}$, in kN, to be considered for the strength checks at sections a) and b) of side frames (specified in Fig. B.11.4; in the case of separate lower brackets, section b) is at the top of the lower bracket), are given by:

$$P_{fr,a} = P_s + \max(P_1, P_2)$$

$$P_{fr,b} = P_{fr,a}\frac{h - 2h_B}{h}$$

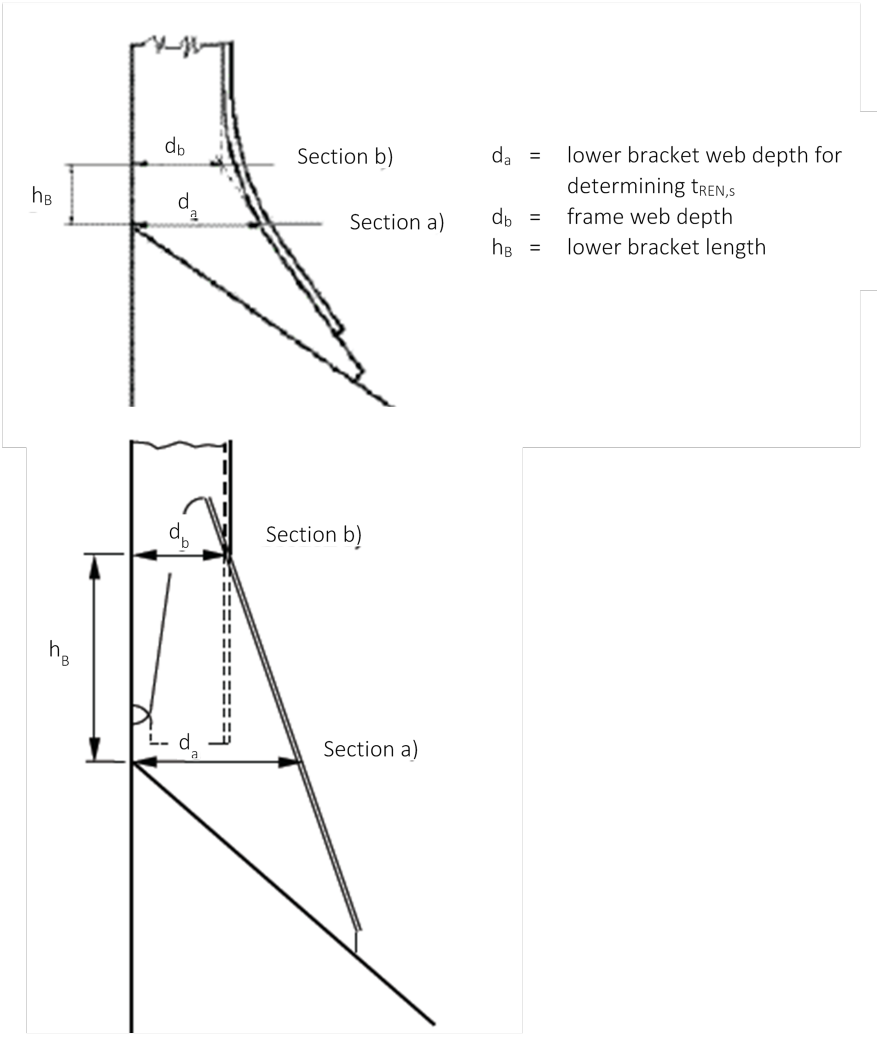

Fig. B.11.4 Section a) and b)

Where :

p_s	=	still water force, in kN
	=	$s \cdot h \left(\frac{p_{s,U} + p_{s,L}}{2}\right)$ when the upper end of the side frame span h (see Fig. B.11.1 is below the load water line
	=	$s \cdot h' \left(\frac{p_{s,L}}{2}\right)$ when the upper end of the side frame span h (see Fig. B.11.1 is at or above the load water line
p_1	=	wave force, in kN, in head sea
	=	$s \cdot h \left(\frac{p_{1,U} + p_{1,L}}{2}\right)$
p_2	=	wave force, in kN, in head sea
	=	$s \cdot h \left(\frac{p_{2,U} + p_{2,L}}{2}\right)$
h, h_b	=	side frame span and lower bracket length, in m, defined in Fig. B.11.1 and Fig. B.11.4, respectively
h'	=	distance, in m, between the lower end of side frame span h (see Fig. B.11.1) and the load water line
a	=	frame spacing, in m
$p_{s,U}$, $p_{s,L}$	=	still water pressure, in kN/m^2, at the upper and lower end of the side frame span h (see Fig. B.11.1), respectively
$p_{1,U}$, $p_{1,L}$	=	wave pressure, in kN/m^2, as defined in 3.1.2.1) below for the upper and lower end of the side frame span h, respectively
$p_{2,U}$, $p_{2,L}$	=	wave pressure, in kN/m^2, as defined in 3.1.2.2) below for the upper and lower end of the side frame span h, respectively

3.1.2 Wave Pressure

1) Wave pressure p_1

— The wave pressure p_1, in kN/m^2, at and below the waterline is given by:

$$p_1 = 150\left[p_{11} + 135\frac{\mathbf{B}}{2\,(\mathbf{B}+75)} - 1,2\,(\mathbf{T} - z)\right]$$

$$p_{11} = 3k_sC + k_f$$

— The wave pressure p_1, in kN/m^2, at and above the waterline is given by:

$$p_1 = p_{1wl} - 7,5\,(z - \mathbf{T})$$

2) Wave pressure p_2

— The wave pressure p_2, in kN/m^2, at and below the waterline is given by:

$$p_2 = 13\left[0,5 \cdot \mathbf{B}\frac{50c_r}{2(\mathbf{B}+75)} + C_B\frac{0.5 \cdot \mathbf{B} + k_f}{14}\left(0.7 + 2\frac{z}{\mathbf{T}}\right)\right]$$

— The wave pressure p_2, in kN/m^2, at and above the waterline is given by:

$$p_2 = p_{2wl} - 5,0\,(z - \mathbf{T})$$

where :

p_{1wl}	=	p_1 wave sea pressure at the waterline
p_{2wl}	=	p_2 wave sea pressure at the waterline
L	=	length, in m
B	=	greatest moulded breadth, in m
C_B	=	block coefficient, but not to be taken less than 0,6
T	=	maximum design draught, in m
C	=	coefficient
	=	$10,75 - \left(\frac{300 - \mathbf{L}}{100}\right)^{1,5}$ for 90 $\leq$ **L** $\leq$ 300 m
	=	10,75 for 300 m < **L**
C_r	=	$\left(1,25 - 0,025\frac{2k_r}{\sqrt{GM}}\right)$ k
k	=	1,2 for ships without bilge keel
	=	1,0 for ships with bilge keel
k_r	=	roll radius of gyration. If the actual value of kr is not available:
	=	0,39**B** for ships with even distribution of mass in transverse section (e.g. alternate heavy cargo loading or homogeneous light cargo loading)
	=	0,25**B** for ships with uneven distribution of mass in transverse section (e.g. homogeneous heavy cargo distribution)
GM	=	0,12**B** if the actual value of GM is not available
z	=	vertical distance, in m, from the baseline to the load point
k_s	=	$C_B + \frac{0,83}{\sqrt{C_B}}$ at aft end of **L**
	=	C_B between 0,2**L** and 0,6**L** from aft end of **L**
	=	$C_B + \frac{1,33}{C_B}$ at aft end of **L**
		Between the above specified points, k_s is to be interpolated linearly.
k_f	=	0,8 C

3.2 Allowable stresses

The allowable normal and shear stresses σ_a and τ_a, in N/mm$_2$, in the side shell frames and brackets are given by:

$\sigma_a = 0,90\sigma_f$

$\tau_a = 0,40\sigma_f$

where σ_F is the minimum upper yield stress, in N/mm^2, of the material.

3.3 Shear strength check

Where t_M in the lower part of side frames, as defined in Fig. B.11.1, is equal to or less than t_{COAT}, shear strength check is to be carried out in accordance with the following.

The thickness $t_{REN,S}$, in mm, is the greater of the thicknesses $t_{REN,Sa}$ and $t_{REN,Sb}$ obtained from the shear strength check at sections a) and b) (see Fig. B.11.4 and 3.1) given by the following, but need not be taken in excess of 0,75 · t_w.

— at section a) : $t_{REN,Sa} = \frac{1000k_sP_{fr,a}}{d_a \sin\varphi\tau_a}$

— at section b) : $t_{REN,Sb} = \frac{1000k_sP_{fr,b}}{d_b \sin\varphi\tau_a}$

where :

k_S	=	shear force distribution factor, to be taken equal to 0,6
$P_{fr,a}$, $P_{fr,b}$	=	pressures forces defined in 3.1.1
d_a, d_b	=	bracket and frame web depth, in mm, at sections a) and b), respectively (see Fig. B.11.4); in case of separate (non-integral) brackets, d_b is to be taken as the minimum web depth deducing possible scallops
φ	=	angle between frame web and shell plate
τ_a	=	allowable shear stress, in N/mm^2, defined in 3.2.

3.4 Bending strength check

Where the lower bracket length or depth does not meet the requirements in Rules for Hull (Pt.1, Vol.II) Sec.23.B.5.2, the actual section modulus, in cm^3, of the brackets and side frames at sections a) and b) is to be not less than:

— at section a): $Z_a = \dfrac{1000 P_{fr,a} h}{m_a \sigma_a}$

— at section b): $Z_b = \dfrac{1000 P_{fr,a} h}{m_b \sigma_a}$

where :

$P_{fr,a}$	=	pressures forces defined in 3.1.1
h	=	side frame span, in m, defined in Fig. B.11.1
σ_a	=	allowable normal stress, in N/mm^2, defined in 3.2
m_a, m_b	=	bending moment coefficients defined in Table B.11.2

The actual section modulus of the brackets and side frames is to be calculated about an axis parallel to the attached plate, based on the measured thicknesses. For pre-calculations, alternative thickness values may be used, provided they are not less than:

— t_{REN}, for the web thickness

— the minimum thicknesses allowed by BKI renewal criteria for flange and attached plating.

The attached plate breadth is equal to the frame spacing, measured along the shell at midspan of h.

If the actual section moduli at sections a) and b) are less than the values W_a and W_b, the frames and brackets are to be renewed or reinforced in order to obtain actual section moduli not less than 1,2 · W_a and 1,2 · W_b, respectively.

In such a case, renewal or reinforcements of the flange are to be extended over the lower part of side frames, as defined in Fig. B.11.1.

Table B.11.2 Bending moment coefficients m_a and m_b

	ma	mb		
		hB ≤ 0,08 h	hB = 0,1h	hB = 0,125 h
Empty holds of ships approved to operate in non-homogeneous loading conditions.	10	17	19	22
Other cases	12	20	22	26
Note 1: Non homogeneous loading condition means a loading condition in which the ratio between the highest and the lowest filling ratio, evaluated for each hold, exceeds 1,20 corrected for different cargo densities. Note 2: For intermediate value of the bracket length h_B, the coefficient m_b is obtained by linier interpolation between the table values.				

B.12 ESP Survey Reporting Principles

As a principle, for ships which are subject to ESP, the surveyor is to include the following content in his report for survey of hull structure and piping systems, as relevant for the survey.

The structure of the reporting content may be different, depending on the report system for the respective Societies.

1. General

1.1 A survey report is to be generated in the following cases:

1. In connection with commencement, continuation and / or completion of periodical hull surveys, i.e. annual, intermediate and renewal surveys, as relevant
2. When structural damages / defects have been found
3. When repairs, renewals or modifications have been carried out
4. When condition of class (recommendation) has been imposed or deleted

1.2 The purpose of reporting is to provide:

1. Evidence that prescribed surveys have been carried out in accordance with applicable classification rules
2. Documentation of surveys carried out with findings, repairs carried out and condition of class (recommendation) imposed or deleted
3. Survey records, including actions taken, which shall form an auditable documentary trail. Survey reports are to be kept in the survey report file required to be on board
4. Information for planning of future surveys
5. Information which may be used as input for maintenance of classification rules and instructions

1.3 When a survey is split between different survey stations, a report is to be made for each portion of the survey. A list of items surveyed, relevant findings and an indication of whether the item has been credited, are to be made available to the next attending surveyor, prior to continuing or completing the survey. Thickness measurement and tank testing carried out is also to be listed for the next surveyor.

2. Extent of the survey

2.1 Identification of compartments where an overall survey has been carried out.

2.2 Identification of locations, in each ballast tank and cargo hold including hatch covers and coamings, where a close-up survey has been carried out, together with information of the means of access used.

2.3 Identification of locations, in each ballast tank and cargo hold including hatch covers and coamings, where thickness measurement has been carried out.

Note:
As a minimum, the identification of location of close-up survey and thickness measurement is to include a confirmation with description of individual structural members corresponding to the extent of requirements stipulated in this requirement based on type of periodical survey and the ship's age.

Where only partial survey is required, i.e. 25% of shell frames, one transverse web, two selected cargo hold transverse bulkheads, the identification is to include location within each ballast tank and cargo hold by reference to frame numbers.

2.4 For areas in ballast tanks and cargo holds where protective coating is found to be in GOOD condition and the extent of close-up survey and / or thickness measurement has been specially considered, structures subject to special consideration are to be identified.

2.5 Identification of tanks subject to tank testing.

2.6 Identification of piping systems on deck and within cargo holds, ballast tanks, pipe tunnels, cofferdams and void spaces where:

1. Examination including internal examination of piping with valves and fittings and thickness measurement, as relevant, has been carried out
2. Operational test to working pressure has been carried out

3. Result of the survey

3.1 Type, extent and condition of protective coating in each tank, as relevant (rated GOOD, FAIR or POOR).

3.2 Structural condition of each compartment with information on the following, as relevant:

1. Identification of findings, such as:
   - Corrosion with description of location, type and extent
   - Areas with substantial corrosion
   - Cracks / fractures with description of location and extent
   - Buckling with description of location and extent
   - Indents with description of location and extent
2. Identification of compartments where no structural damages / defects are found
3. The report may be supplemented by sketches / photos.

3.3 Thickness measurement report is to be verified and signed by the surveyor controlling the measurements on board.

3.4 Evaluation result of longitudinal strength of the hull girder of oil tankers of 130 m in length and upwards and over 10 years of age. The following data is to be included, as relevant:

1) measured and as-built transverse sectional areas of deck and bottom flanges;
2) diminution of transverse sectional areas of deck and bottom flanges;
3) details of renewals or reinforcements carried out, as relevant (as per 4.2)

4. Actions taken with respect to findings

4.1 Whenever the attending surveyor is of the opinion that repairs are required, each item to be repaired is to be identified in the survey report. Whenever repairs are carried out, details of the repairs effected are to be reported by making specific reference to relevant items in the survey report.

4.2 Repairs carried out are to be reported with identification of:

1) Compartment
2) Structural member
3) Repair method (i.e. renewal or modification) including:
   - steel grades and scantlings (if different from the original);
   - sketches/photos, as appropriate;
4) Repair extent
5) NDT / Tests

4.3 For repairs not completed at the time of survey, condition of class is to be imposed with a specific time limit for the repairs. In order to provide correct and proper information to the surveyor attending for survey of the repairs, condition of class is to be sufficiently detailed with identification of each item to be repaired.

For identification of extensive repairs, reference may be given to the survey report.

5. Attachment

In accordance with the above requirements, it can be concluded that reports for each type of ship are prepared as follows:

Report 1

Executive Hull Summary for Oil Tanker/Chemical Tanker
(Issued upon Completion of Renewal Survey)

General particulars

Ship's name		Class identify number	
Port of registry		IMO identify number	
Deadweight (t)		National flag	
Date of build		Gross tonnage	
Date of major conversion		Classification notation	
Type of conversion		Owner	

a) The survey reports and documents listed below have been reviewed by the undersigned and found to be satisfactory

b) A summary of the survey is attached herewith on sheet 2

c) The hull renewal survey has been completed in accordance with the Rules on [date]

Executive Summary Report completed by:	Name: Signature:	Title:
OFFICE	DATE	
Executive Summary Report verified by:	Name: Signature:	Title:
OFFICE	DATE	

Attached reports and documents:

1)

2)

3)

4)

5)

6)

Executive Hull Summary

A)	General Particulars:	-	Refer to previous page
B)	Report Review:	-	Where and how survey was done
C)	Close-up Survey:	-	Extent (Which tanks)
D)	Cargo & ballast piping system:	-	Examined
		-	Operationally tested
E)	Thickness measurements:	-	Reference to Thickness Measurement report
		-	Summary of where measured
		-	Separate form indicating the tanks/areas with Substantial Corrosion, and corresponding - Thickness diminution - Corrosion pattern
F)	Tank Protection:		Separate form indicating:
		-	Location of coating
		-	Condition of coating (if applicable)
G)	Repairs:	-	Identification of tanks/areas
H)	Conditions of Class:		
I)	Memoranda:	-	Acceptable defects
		-	Any points of attention for future surveys, e.g. for Suspect Areas.
		-	Examination of ballast tanks at annual surveys due to coating breakdown
J)	Evaluation results of the ship's longitudinal strength (for oil tankers of 130 m in length and upwards and of over 10 years of age)		
K)	Conclusion:	-	Statement on evaluation/verification of Survey report

Extract of Thickness Measurements (NON-CSR SHIPS)
(Reference is made to the thickness measurements report)

Positions of substantially corroded tanks/areas or areas with deep pitting[1]	Thickness diminution [%]	Corrosion pattern[2]	Remarks: e.g. ref. attached sketches

Remarks:
1 substantial corrosion, i.e. 75% to 100% of acceptable margins wasted.
2 P = Pitting;
C = Corrosion in general.
Any bottom plating with a pitting intensity of 20% or more, with wastage in the substantial corrosion range or having an average depth of pitting of 1/3 or more of actual plate thickness is to be noted.

Extract of Thickness Measurements (CSR SHIPS)
(Reference is made to the thickness measurements report)

Positions of substantially corroded tanks/areas or areas with deep pitting[1]	t_m - t_{ren} [mm]	Corrosion pattern[2]	Remarks: e.g. ref. attached sketches

Note:

1 Substantial corrosion, an extent of corrosion such that the assessment of the corrosion pattern indicates a measured thickness between t_{ren} + 0.5mm and t_{ren}.

2 P = Pitting C = Corrosion in general
Areas with deep pitting assessed according to Rules for Bulk Carrier and Oil Tanker (Pt.1, Vol.XVII.A) Sec.1.E.6 are to be recorded in this column.

Space Protection

Tank Nos[1]	Tank protection[2]	Coating condition[3]	Remarks

Note:

1 All segregated ballast tanks and combined cargo/ballast tanks to be listed.

2 C = Coating; NP = No Protection.

3 Coating condition according to the following standard:

GOOD condition with only minor spot rusting;

FAIR condition with local breakdown at edges of stiffeners and weld connections and/or light rusting over 20% or more of areas under consideration, but less than as defined for POOR condition;

POOR condition with general breakdown of coating over 20% or more of areas or hard scale at 10% or more of areas under consideration.

for ballast tanks, If coating condition less than “GOOD” is given, tanks are to be examined at annual surveys. This is to be noted in Section 4.I.B.4.3 of the Executive Hull Summary.

Evaluation result of longitudinal strength of the hull girder of oil tankers of 130 m in length and upwards and of over 10 years of age (Of sections 1, 2 and 3 below, only one applicable section is to be completed)

1. This section applies to ships regardless of the date of construction: Transverse sectional areas of deck flange (deck plating and deck longitudinals) and bottom flange (bottom shell plating and bottom longitudinals) of the ship's hull girder have been calculated by using the thickness measured, renewed or reinforced, as appropriate, during the renewal survey most recently conducted after the ship reached 10 years of age, and found that the diminution of the transverse sectional area does not exceed 10% of the as-built area, as shown in Table B 12.1:

Table B.12.1 Transverse Sectional Area of Hull Girder Flange

		Measured	As-built	Diminution
Tranverse section 1	Deck flange	cm^2	cm^2	cm^2 (%)
	Bottom flange	cm^2	cm^2	cm^2 (%)
Transverse section 2	Deck flange	cm^2	cm^2	cm^2 (%)
	Bottom flange	cm^2	cm^2	cm^2 (%)
Transverse section 3	Deck flange	cm^2	cm^2	cm^2 (%)
	Bottom flange	cm^2	cm^2	cm^2 (%)

2. This section applies to ships constructed on or after 1 July 2002: Section moduli of transverse section of the ship's hull girder have been calculated by using the thickness of structural members measured, renewed or reinforced, as appropriate, during the renewal survey most recently conducted after the ship reached 10 years of age in accordance with the provisions of Annex B.10, B.2.2 and are found to be within their diminution limits determined by BKI[4)], as shown in Table B.12.2:

Table B.12.2 Transverse Section Modulus of Hull Girder

		W_{act} (cm^3)[1]	W_{req} (cm^3)[2]	Remarks
Tranverse section 1	Upper deck			
	Bottom			
Transverse section 2	Upper deck			
	Bottom			
Transverse section 3	Upper deck			
	Bottom			

Notes:

1 W_{act} means the actual section moduli of the transverse section of the ship's hull girder calculated by using the thickness of structural members measured, renewed or reinforced, as appropriate, during the renewal survey, in accordance with the provisions of Annex B.10, B.2.2

2 W_{req} means diminution limit of the longitudinal bending strength of ships, as calculated in accordance with the provisions of Annex B.10, B.2.2. The calculation sheets for W_{act} are to be attached to this report.

3. This section applies to ships constructed before 1 July 2002: Section moduli of transverse section of the ship's hull girder have been calculated by using the thickness of structural members measured, renewed or reinforced, as appropriate, during the renewal survey most recently conducted after the ship reached 10 years of age in accordance with the provisions of Annex B.10, B.2.1.2, and found to meet the criteria required by BKI and that W_{act} is not less than W_{mc} (defined in note 2 of Table B.12.3) as specified in Rules for

[4)] The actual transverse section modulus of the hull girder of oil tankers calculated under Annex B.10, B.2.2 is not to be less than 90% of the required section modulus for new buildings specified in IACS Unified Requirements S7 (C = 1.0 C_n is to be used for the purpose of this calculation.) or S11, whichever is the greater.

Hull (Pt.1, Vol.II) Sec.5, C.2, as shown in Table B.12.3. Describe the criteria for acceptance of the minimum section moduli of the ship's hull girder for ships in service required by BKI.

Table B.12.3 Transverse Section Modulus of Hull Girder

		W_{act} (cm^3)[1]	W_{req} (cm^3)[2]	Remarks
Tranverse section 1	Upper deck			
	Bottom			
Transverse section 2	Upper deck			
	Bottom			
Transverse section 3	Upper deck			
	Bottom			

Notes:

1 As defined in note 1 of Table B.12.2.

2 W_{mc} means the di minution limit of minimum section modulus calculated in accordance with provisions of Annex B.10, B.2.1.2.

Report 2
Executive Hull Summary for Bulk Carrier
(Issued upon Completion of Renewal Survey)

General particulars

Ship's name		Class identify number	
Port of registry		IMO identify number	
Deadweight (t)		National flag	
Date of build		Gross tonnage	
Date of major conversion		Classification notation	
Type of conversion		Owner	

a) The survey reports and documents listed below have been reviewed by the undersigned and found to be satisfactory

b) A summary of the survey is attached herewith on sheet 2

c) The hull renewal survey has been completed in accordance with the Rules on [date]

Executive Summary Report completed by:	Name: Signature:	Title:
OFFICE	DATE	
Executive Summary Report verified by:	Name: Signature:	Title:
OFFICE	DATE	

Attached reports and documents:

1)

2)

3)

4)

5)

6)

Executive Hull Summary

A)	General Particulars:	-	Refer to previous page
B)	Report Review:	-	Where and how survey was done
C)	Close-up Survey:	-	Extent (Which tanks)
D)	Thickness measurements:	-	Reference to Thickness Measurement report
		-	Summary of where measured
		-	Separate form indicating the tanks/areas with Substantial Corrosion, and corresponding - Thickness diminution - Corrosion pattern
E)	Tank Protection:		Separate form indicating:
		-	Location of coating
		-	If coating condition “POOR” is given, extended annual surveys are to be introduced. This is to be noted in part G) of the Executive Hull Summary.
F)	Repairs:	-	Identification of tanks/areas
G)	Conditions of Class:		
H)	Memoranda:	-	Acceptable defects
		-	Any points of attention for future surveys, e.g. for Suspect Areas.
		-	Examination of ballast tanks at annual surveys due to coating breakdown
I)	Conclusion:	-	Statement on evaluation/verification of Survey report

Extract of Thickness Measurements (NON-CSR SHIPS)
(Reference is made to the thickness measurements report)

Positions of substantially corroded tanks/areas or areas with deep pitting[1]	**Thickness diminution [%]**	**Corrosion pattern[2]**	**Remarks: e.g. ref. attached sketches**

Remarks:

1 Substantial corrosion, an extent of corrosion such that the assessment of the corrosion pattern indicates a measured thickness between t_{ren} + 0.5mm and t_{ren}.

2 P = Pitting C = Corrosion in general
Any bottom plating with a pitting intensity of 20% or more, with wastage in the substantial corrosion range or having an average depth of pitting of 1/3 or more of actual plate thickness is to be noted.

Extract of Thickness Measurements (CSR SHIPS)
(Reference is made to the thickness measurements report)

Positions of substantially corroded tanks/areas or areas with deep pitting[1]	**t_m - t_{ren} [mm]**	**Corrosion pattern[2]**	**Remarks: e.g. ref. attached sketches**

Space Protection

Tank Nos[1]	Tank protection[2]	Coating condition[3]	Remarks

Note:

[1] All ballast tanks and cargo holds to be listed.

[2] C = Coating; NP = No Protection.

[3] Coating condition according to the following standard:

GOOD condition with only minor spot rusting;

FAIR condition with local breakdown at edges of stiffeners and weld connections and/or light rusting over 20% or more of areas under consideration, but less than as defined for POOR condition;

POOR condition with general breakdown of coating over 20% or more of areas or hard scale at 10% or more of areas under consideration.

If coating condition less than “GOOD” is given, extended annual surveys are to be introduced. This is to be noted in H of the Executive Hull Summary.

Report 3
Executive Hull Summary for Double Skin Bulk Carrier
(Issued upon Completion of Renewal Survey)

General particulars

Ship's name		Class identify number	
Port of registry		IMO identify number	
Deadweight (t)		National flag	
Date of build		Gross tonnage	
Date of major conversion		Classification notation	
Type of conversion		Owner	

a) The survey reports and documents listed below have been reviewed by the undersigned and found to be satisfactory

b) A summary of the survey is attached herewith on sheet 2

c) The hull renewal survey has been completed in accordance with the Rules on [date]

Executive Summary Report completed by:	Name: Signature:	Title:
OFFICE	DATE	
Executive Summary Report verified by:	Name: Signature:	Title:
OFFICE	DATE	

Attached reports and documents:

1)

2)

3)

4)

5)

6)

Executive Hull Summary

A)	General Particulars:	-	Refer to previous page
B)	Report Review:	-	Where and how survey was done
C)	Close-up Survey:	-	Extent (Which tanks)
D)	Thickness measurements:	-	Reference to Thickness Measurement report
		-	Summary of where measured
		-	Separate form indicating the tanks/areas with Substantial Corrosion, and corresponding - Thickness diminution - Corrosion pattern
E)	Tank/ hold/ double-side skin void space Protection:	-	Separate form indicating:
		-	Location of coating
		-	Condition coating (if applicable)
F)	Repairs:	-	Identification of tanks/areas
G)	Conditions of Class:		
H)	Memoranda:	-	Acceptable defects
		-	Any points of attention for future surveys, e.g. for Suspect Areas.
		-	Examination of ballast tanks and double-side skin void spaces at annual surveys due to coating breakdown
I)	Conclusion:	-	Statement on evaluation/verification of Survey report

Extract of Thickness Measurements (NON-CSR SHIPS)
(Reference is made to the thickness measurements report)

Positions of substantially corroded tanks/areas or areas with deep pitting[1]	Thickness diminution [%]	Corrosion pattern[2]	Remarks: e.g. ref. attached sketches

Remarks:
1 Substantial corrosion, i.e. 75% to 100% of acceptable margins wasted.
2 P = Pitting C = Corrosion in general
Any bottom plating with a pitting intensity of 20% or more, with wastage in the substantial corrosion range or having an average depth of pitting of 1/3 or more of actual plate thickness is to be noted.

Tank Protection

Tank Nos[1]	Tank protection[2]	Coating condition[3]	Remarks

Note:

[1] All ballast tanks and cargo holds to be listed.

[2] C = Coating; NP = No Protection.

[3] Coating condition according to the following standard:

GOOD condition with only minor spot rusting;

FAIR condition with local breakdown at edges of stiffeners and weld connections and/or light rusting over 20% or more of areas under consideration, but less than as defined for POOR condition;

POOR condition with general breakdown of coating over 20% or more of areas or hard scale at 10% or more of areas under consideration.

For ballast tanks, If coating condition less than “GOOD” is given, tanks are to be examined at annual surveys. This is to be noted in H) of the Executive Hull Summary.

For double-side skin void spaces on bulk carriers exceeding 20 years of age and of 150 m in length and upwards, if coating condition POOR is given, those voids are to be examined at annual surveys. This is to be noted in H) of Executive Hull Summary.

B.13 Recommended Procedures for Thickness Measurements[1)]

A. Recommended Procedures for Thickness Measurements of Ships

Notes:

1. This document is to be used for recording thickness measurements for all ships as required by Section 3, D.

2. Reporting forms TM1-G, TM2-G (i) and (ii), TM3-G, TM4-G, TM5-G (sheets 4 to 9) are to be used for recording thickness measurements and the maximum allowable diminution is to be stated. The maximum allowable diminution is to be stated in an attached document.

GENERAL PARTICULARS

Ship's name:
IMO number:
Class identity number:
Port of registry:
Gross tons:
Deadweight:
Date of build:
Classification society:

Name of Company performing thickness measurement:
Thickness measurement company certified by:
Certificate No:
Certificate valid from.....to.....
Place of measurement:
First date of measurement:
Last date of measurement:

Renewal survey/intermediate survey due:*
Details of measurement equipment:
Qualification of operators:

Report number:	consisting of	Sheets

Name of operator:	Name of surveyor:
Signature of operator:	Signature of surveyor:
Company official stamp:	Classification society official stamp:

* Delete as appropriate.

[1)] This Appendix is recommendatory. For ESP ships, IMO No. is to be marked in the general particulars.

Sheet 4
TM1-G

Report on Thickness Measurement of All Deck Plating, All Bottom Shell Plating or Side Shell Plating*
(*delete as appropriate)

Ship's name..... Class identity No. ..... Report No. .....

STRAKE POSITION																	
PLATE POSITION	No. or Letter	Org. Thk. mm	Forward Reading						Aft Reading						Mean Diminution %		Maximum Allowable Diminution
			Gauged		Diminution *P*		Diminution *S*		Gauged		Diminution *P*		Diminution *S*				
			P	*S*	mm	%	mm	%	*P*	*S*	mm	%	mm	%	*P*	*S*	mm
12th forward																	
11th																	
10th																	
9th																	
8th																	
7th																	
6th																	
5th																	
4th																	
3rd																	
2nd																	
1st																	
Amidships																	
1st aft																	
2nd																	
3rd																	
4th																	
5th																	
6th																	
7th																	
8th																	
9th																	
10th																	
11th																	
12th																	

Operators signature: .....

Notes:

1. *This report is to be used for recording the thickness measurement of:*

   A— *All strength deck plating within the cargo length area.*

   B— *All keel, bottom shell plating and bilge plating within the cargo length area.*

   C— *Side shell plating that is all wind and water strakes within the cargo length area.*

   D— *Side shell plating that is selected wind and water strakes outside the cargo length area.*

2. *The strake position is to be clearly indicated as follows:*

   1. *For strength deck indicate the number of the strake of plating inboard from the stringer plate.*
   2. *For bottom plating indicate the number of the strake of plating outboard from the keel plate.*
   3. *For side shell plating give number of the strake of plating below sheer strake and letter as shown on shell expansion.*

3. *Only the deck plating strakes outside line of openings are to be recorded.*

4. *Measurements are to be taken at the forward and aft areas of all plates, and the single measurements recorded are to represent the average of multiple measurements.*

5. *The maximum allowable diminution could be stated in an attached document.*

Sheet 5
TM2-G(i)

Report on Thickness Measurement of Shell and Deck Plating (one, two or three transverse sections)

Ship's name..... Class identity No. ..... Report No. .....

STRENGTH DECK AND SHEERSTRAKE PLATING																											
	FIRST TRANSVERSE SECTION AT FRAME NUMBER									SECOND TRANSVERSE SECTION AT FRAME NUMBER									THIRD TRANSVERSE SECTION AT FRAME NUMBER								
STRAKE POSITION	**No. or Letter**	**Org. Thk.**	**Max. Alwb. Dim.**	**Gauged**		**Diminution P**		**Diminution S**		**No. or Letter**	**Org. Thk.**	**Max. Alwb. Dim.**	**Gauged**		**Diminution P**		**Diminution S**		**No. or Letter**	**Org. Thk.**	**Max. Alwb. Dim.**	**Gauged**		**Diminution P**		**Diminution S**	
		mm	**mm**	**P**	**S**	**mm**	**%**	**mm**	**%**		**mm**	**mm**	**P**	**S**	**mm**	**%**	**mm**	**%**		**mm**	**mm**	**P**	**S**	**mm**	**%**	**mm**	**%**
Stringer plate																											
1st strake inboard																											
2nd																											
3rd																											
4th																											
5th																											
6th																											
7th																											
8th																											
9th																											
10th																											
11th																											
12th																											
13th																											
14th																											
Centre strake																											
Sheer strake																											
TOPSIDE TOTAL																											

Operators signature: .....

Notes:

1. *This report is to be used for recording the thickness measurement of: Strength deck plating and sheer strake plating transverse sections:*

   Two or three sections within the cargo length area, comprising of the structural items.

2. *Only the deck plating strakes outside the line of openings are to be recorded.*

3. *The topside area comprises deck plating, stringer plate and sheerstrake (including rounded gunwales).*

4. *The exact frame station of measurement is to be stated.*

5. *The single measurements recorded are to represent the average of multiple measurements.*

6. *The maximum allowable diminution could be stated in an attached document.*

Sheet 6
TM2-G(ii)

Report on Thickness Measurement of Shell and Deck Plating (one, two or three transverse sections)

Ship's name..... Class identity No. ..... Report No. .....

SHELL PLATING																												
	FIRST TRANSVERSE SECTION AT FRAME NUMBER									SECOND TRANSVERSE SECTION AT FRAME NUMBER									THIRD TRANSVERSE SECTION AT FRAME NUMBER								
STRAKE POSITION	No. or Letter	Org. Thk.	Max. Alwb. Dim.	Gauged		Diminution P		Diminution S		No. or Letter	Org. Thk.	Max. Alwb. Dim.	Gauged		Diminution P		Diminution S		No. or Letter	Org. Thk.	Max. Alwb. Dim.	Gauged		Diminution P		Diminution S	
		mm	mm	P	S	mm	%	mm	%		mm	mm	P	S	mm	%	mm	%		mm	mm	P	S	mm	%	mm	%
1st below sheer strake																												
2nd																												
3rd																												
4th																												
5th																												
6th																												
7th																												
8th																												
9th																												
10th																												
11th																												
12th																												
13th																												
14th																												
15th																												
16th																												
17th																												
18th																												
19th																												
20th																												
keel strake																												
BOTTOM TOTAL																												

Operators signature: .....

Notes:

1. *This report is to be used for recording the thickness measurement of: Shell plating transverse sections:*

   Two or three sections within the cargo length area, comprising of the structural items.

2. *The bottom area comprises keel, bottom and bilge plating.*

3. *The exact frame station of measurement is to be stated.*

4. *The single measurements recorded are to represent the average of multiple measurements.*

5. *The maximum allowable diminution could be stated in an attached document.*

Sheet 7
TM3-G

Report on Thickness Measurement of Longitudinal Members (one, two or three transverse sections)

Ship's name..... Class identity No. ..... Report No. .....

SHELL PLATING																												
	FIRST TRANSVERSE SECTION AT FRAME NUMBER									SECOND TRANSVERSE SECTION AT FRAME NUMBER									THIRD TRANSVERSE SECTION AT FRAME NUMBER								
STRUCTURAL MEMBER	No. or Letter	Org. Thk.	Max. Alwb. Dim.	Gauged		Diminution P		Diminution S		No. or Letter	Org. Thk.	Max. Alwb. Dim.	Gauged		Diminution P		Diminution S		No. or Letter	Org. Thk.	Max. Alwb. Dim.	Gauged		Diminution P		Diminution S	
		mm	mm	P	S	mm	%	mm	%		mm	mm	P	S	mm	%	mm	%		mm	mm	P	S	mm	%	mm	%

Operators signature: .....

Notes:

1. *This report is to be used for recording the thickness measurement of: Longitudinal members at transverse sections:*

   Two or three sections within the cargo length area, comprising of the appropriate structural items.

2. *The exact frame station of measurement is to be stated.*

3. *The single measurements recorded are to represent the average of multiple measurements.*

4. *The maximum allowable diminution could be stated in an attached document.*

Sheet 8

TM4-G **Report on Thickness Measurement of Transverse Bulkheads**

Within the cargo tank or cargo hold space

Ship's name..... Class identity No. ..... Report No. .....

LOCATION OF STRUCTURE:								**FRAME NO.:**
STRUCTURAL COMPONENT (PLATING/STIFFENER)								
	Original Thickness mm	**Max. Alwb. Dim. mm**	**Gauged**		**Diminution P**		**Diminution S**	
			Port	**Starboard**	**mm**	**%**	**mm**	**%**

Operators signature: .....

Notes:

1. *This report is to be used for recording the thickness measurement of cargo hold transverse bulkheads.*
2. *The single measurements recorded are to represent the average of multiple measurements.*
3. *The maximum allowable diminution could be stated in an attached document.*

Sheet 9
TM5-G **Report on Thickness measurement of Miscellaneous Structural Members**

Ship's name..... Class identity No. ..... Report No. .....

STRUCTURAL MEMBER:									SKETCH
LOCATION OF STRUCTURE:									
STRUCTURAL COMPONENT (PLATING/STIFFENER)	Original Thickness mm	Max. Alwb. Dim. mm	Gauged		Diminution P		Diminution S		
			Port	Starboard	mm	%	mm	%	

Operators signature: .....

Notes:

1. *This report is to be used for recording the thickness measurement of miscellaneous structural members including the structural items (36), (37) and (38).*
2. *The single measurements recorded are to represent the average of multiple measurements.*
3. *The maximum allowable diminution could be stated in an attached document.*

B. Recommended Procedures for Thickness Measurements of Ships Built According to The Net Scantling Approach[1)]

Notes:

1. This document is to be used for recording thickness measurements of ships built according to the net scantling approach as required by Section 3, D.

2. Reporting forms TM1-G(NSD), TM2-G(NSD) (i) and (ii), TM3-G(NSD), TM4-G(NSD), TM5-G(NSD) (sheets 4 to 9) are to be used for recording thickness measurements. The as-built thickness, the voluntary thickness addition and renewal thickness (minimum allowable thickness) are to be stated in the said forms.

GENERAL PARTICULARS

Ship's name:
IMO number:
Class identity number:
Port of registry:
Gross tons:
Deadweight:
Date of build:
Classification society:

Name of Company performing thickness measurement:
Thickness measurement company certified by:
Certificate No:
Certificate valid from.....to.....
Place of measurement:
First date of measurement:
Last date of measurement:

Renewal survey/intermediate survey due:*
Details of measurement equipment:
Qualification of operators:

Report number:	consisting of	Sheets

Name of operator:	Name of surveyor:
Signature of operator:	Signature of surveyor:
Company official stamp:	Classification society official stamp:

* Delete as appropriate.

[1)] This Appendix is recommendatory.

Sheet 4
TM1-G(NSD)

Report on Thickness Measurement of All Deck Plating, All Bottom Plating or Side Shell Plating*
(*delete as appropriate)

Ship's name..... Class identity No. ..... Report No. .....

STRAKE POSITION														
PLATE POSITION	**No. or Letter**	**As Built Thk. mm**	**Voluntary Thickness Addition mm**	**Renewal Thickness mm**	**Forward Reading**				**Aft Reading**				**Mean Remaining Corr. Addition, mm**	
					Gauged Thk. mm (b1)		**Remaining Corr. Addition, mm** (c1) = (b1) - (a)		**Gauged Thk. mm** (b2)		**Remaining Corr. Addition, mm** (c2) = (b2) - (a)		[(c1) + (c2)]/2	
				(a)	***P***	***S***	***P***	***S***	***P***	***S***	***P***	***S***	***P***	***S***
12th														
11th														
10th														
9th														
8th														
7th														
6th														
5th														
4th														
3rd														
2nd														
1st forward														
Amidships														
1st aft														
2nd														
3rd														
4th														
5th														
6th														
7th														
8th														
9th														
10th														
11th														
12th														

Operators signature: .....

Notes:

1. *This report is to be used for recording the thickness measurement of:*

   A— *All strength deck plating within cargo length area.*

   B— *All keel, bottom shell plating and bilge plating within the cargo length area.*

   C— *Side shell plating that is all wind and water strakes within the cargo length area.*

   D— *Side shell plating that is selected wind and water strakes outside the cargo length area.*

2. *The strake position is to be clearly indicated as follows:*

   1. *For strength deck indicate the number of the strake of plating inboard from the stringer plate.*
   2. *For bottom plating indicate the number of the strake of plating outboard from the keel plate.*
   3. *For side shell plating give number of the strake of plating sheer strake and letter as shown on shell expansion.*

3. *Only the deck plating strakes outside the line of openings are to be recorded.*

4. *Measurements are to be taken at the forward and aft areas of all plates and the single measurements recorded are to represent the average of multiple measurements.*

5. *The remaining corrosion addition is to be recorded with result of gauged thickness minus renewal thickness. If the result is between 0 and substantial corrosion allowable limits, the structure in way is to be additionally gauged, and the mark "S" is to be indicated in the right-hand column.*

Sheet 5
TM2-G(NSD)(i)

Report on Thickness Measurement of Shell and Deck Plating (one, two or three transverse sections)

Ship's name..... Class identity No. ..... Report No. .....

STRENGTH DECK AND SHEERSTRAKE PLATING																								
	FIRST TRANSVERSE SECTION AT FRAME NUMBER								SECOND TRANSVERSE SECTION AT FRAME NUMBER								THIRD TRANSVERSE SECTION AT FRAME NUMBER							
STRAKE POSITION	No. or Letter	As Built Thk. mm	Vol. Thk. Add. mm	Ren. Thk. mm (a)	Gauged Thk. mm (b)		Remaining Corr. Addition, mm (b)-(a)		No. or Letter	As Built Thk. mm	Vol. Thk. Add. mm	Ren. Thk. mm (a)	Gauged Thk. mm (b)		Remaining Corr. Addition, mm (b)-(a)		No. or Letter	As Built Thk. mm	Vol. Thk. Add. mm	Ren. Thk. mm (a)	Gauged Thk. mm (b)		Remaining Corr. Addition, mm (b)-(a)	
					P	*S*	*P*	*S*					*P*	*S*	*P*	*S*					*P*	*S*	*P*	*S*
Stringer plate																								
1st strake inboard																								
2nd																								
3rd																								
4th																								
5th																								
6th																								
7th																								
8th																								
9th																								
10th																								
11th																								
12th																								
13th																								
14th																								
Centre strake																								
Sheer strake																								
TOPSIDE TOTAL																								

Operators signature: .....

Notes:

1. *This report is to be used for recording the thickness measurement of: Strength deck plating and sheer strake plating transverse sections: One, two or three sections within the cargo length area, comprising of the structural items.*
2. *Only the deck plating strakes outside the line of openings are to be recorded.*
3. *The topside area comprises deck plating, stringer plate and sheer strake (including rounded gunwales).*
4. *The exact frame station of measurement is to be stated.*
5. *The single measurements recorded are to represent the average of multiple measurements.*

6. *The remaining corrosion addition is to be recorded with result of gauged thickness minus renewal thickness. If the result is negative, the structure in way is to be renewed, and the mark "R" is to be indicated in the right-hand column. If the result is between 0 and substantial corrosion allowable limits, the structure in way is to be additionally gauged, and the mark "S" is to be indicated in the right-hand column.*

Sheet 6
TM2-G(NSD)(ii)

Report on Thickness Measurement of Shell Plating (one, two or three transverse sections)

Ship's name..... Class identity No. ..... Report No. .....

SHELL PLATING																								
	FIRST TRANSVERSE SECTION AT FRAME NUMBER								SECOND TRANSVERSE SECTION AT FRAME NUMBER								THIRD TRANSVERSE SECTION AT FRAME NUMBER							
STRAKE POSITION	No. or Letter	As Built Thk. mm	Vol. Thk. Add. mm	Ren. Thk. mm (a)	Gauged Thk. mm (b)		Remaining Corr. Addition, mm (b)-(a)		No. or Letter	As Built Thk. mm	Vol. Thk. Add. mm	Ren. Thk. mm (a)	Gauged Thk. mm (b)		Remaining Corr. Addition, mm (b)-(a)		No. or Letter	As Built Thk. mm	Vol. Thk. Add. mm	Ren. Thk. mm (a)	Gauged Thk. mm (b)		Remaining Corr. Addition, mm (b)-(a)	
					P	*S*	*P*	*S*					*P*	*S*	*P*	*S*					*P*	*S*	*P*	*S*
1st below sheer strake																								
2nd																								
3rd																								
4th																								
5th																								
6th																								
7th																								
8th																								
9th																								
10th																								
11th																								
12th																								
13th																								
14th																								
15th																								
16th																								
17th																								
18th																								
19th																								
20th																								
Keel strake																								
BOTTOM TOTAL																								

Operators signature: .....

Notes:

1. *This report is to be used for recording the thickness measurement of: Shell plating transverse sections: One, two or three sections within the cargo length area, comprising of the structural items.*
2. *The bottom area comprises keel, bottom and bilge plating.*
3. *The exact frame station of measurement is to be stated.*
4. *The single measurements recorded are to represent the average of multiple measurements.*

5. *The remaining corrosion addition is to be recorded with result of gauged thickness minus renewal thickness. If the result is negative, the structure in way is to be renewed, and the mark "R" is to be indicated in the right-hand column. If the result is between 0 and substantial corrosion allowable limits, the structure in way is to be additionally gauged, and the mark "S" is to be indicated in the right-hand column.*

Sheet 7
TM3-G(NSD)

Report on Thickness Measurement of Longitudinal Members (one, two or three transverse sections)

Ship's name…….. Class identity No. …….. Report No. ……..

STRENGTH DECK AND SHEERSTRAKE PLATING																								
	FIRST TRANSVERSE SECTION AT FRAME NUMBER								SECOND TRANSVERSE SECTION AT FRAME NUMBER								THIRD TRANSVERSE SECTION AT FRAME NUMBER							
STRUCTURAL MEMBER	Item No.	As Built Thk. mm	Vol. Thk. Add. mm	Ren. Thk. mm (a)	Gauged Thk. mm (b)		Remaining Corr. Addition, mm (b)-(a)		Item No.	As Built Thk. mm	Vol. Thk. Add. mm	Ren. Thk. mm (a)	Gauged Thk. mm (b)		Remaining Corr. Addition, mm (b)-(a)		Item No.	As Built Thk. mm	Vol. Thk. Add. mm	Ren. Thk. mm (a)	Gauged Thk. mm (b)		Remaining Corr. Addition, mm (b)-(a)	
					P	*S*	*P*	*S*					*P*	*S*	*P*	*S*					*P*	*S*	*P*	*S*

Operators signature: …….

Notes:

1. *This report is to be used for recording the thickness measurement of: Longitudinal Members at transverse sections: One, two or three sections within the cargo length area, comprising of the appropriate structural items.*
2. *The exact frame station of measurement is to be stated.*
3. *The single measurements recorded are to represent the average of multiple measurements.*

4. *The remaining corrosion addition is to be recorded with result of gauged thickness minus renewal thickness. If the result is negative, the structure in way is to be renewed, and the mark "R" is to be indicated in the right-hand column. If the result is between 0 and substantial corrosion allowable limits, the structure in way is to be additionally gauged, and the mark "S" is to be indicated in the right-hand column.*

Sheet 8
TM4-G(NSD) **Report on Thickness Measurement of Transverse Bulkheads**

Ship's name..... Class identity No. ..... Report No. .....

LOCATION OF STRUCTURE:						**FRAME NO.:**	
STRUCTURAL COMPONENT (PLATING/STIFFENER)							
STRUCTURAL COMPONENT (PLATING/STIFFENER)	**As Built Thickness mm**	**Voluntary Thickness Addition mm**	**Renewal Thickness mm**	**Gauged Thickness mm (b)**		**Remaining Corr. Addition mm (b)-(a)**	
				P	***S***	***P***	***S***

Operators signature: .....

Notes:

1. *This report is to be used for recording the thickness measurement of cargo hold transverse bulkheads.*
2. *The single measurements recorded are to represent the average of multiple measurements.*
3. *The remaining corrosion addition is to be recorded with result of gauged thickness minus renewal thickness. If the result is negative, the structure in way is to be renewed, and the mark "R" is to be indicated in the right-hand column. If the result is between 0 and substantial corrosion allowable limits, the structure in way is to be additionally gauged, and the mark "S" is to be indicated in the right-hand column.*

Sheet 9
TM5-G(NSD) **Report on Thickness Measurement of Miscellaneous Structural Members**

Ship's name..... Class identity No. ..... Report No. .....

STRUCTURAL COMPONENT:								**SKETCH**
LOCATION OF STRUCTURE:								
Description	**As Built Thk. mm**	**Voluntary Thickness Addition mm**	**Renewal Thickness mm (a)**	**Gauged Thickness mm (b)**		**Remaining Corr. Addition mm (b)-(a)**		
				P	***S***	***P***	***S***	

Operators signature: .....

Notes:

1. *This report is to be used for recording the thickness measurement of miscellaneous structural members.*
2. *The single measurements recorded are to represent the average of multiple measurements.*
3. *The remaining corrosion addition is to be recorded with result of gauged thickness minus renewal thickness. If the result is negative, the structure in way is to be renewed, and the mark "R" is to be indicated in the right-hand column. If the result is between 0 and substantial corrosion allowable limits, the structure in way is to be additionally gauged, and the mark "S" is to be indicated in the right-hand column.*

1. Recommended Procedures for Thickness Measurements of Oil Tankers, Ore/Oil Ships, etc.[1)]

Notes:

1. This document is to be used for recording thickness measurements for oil tanks as required by Section 4, B.

2. Sheets TM1-T, TM2-T, TM3-T, TM4-T, TM5-T and TM6-T (sheets 4 to 10) are to be used for recording thickness measurements and the maximum allowable diminution is to be stated.

The maximum allowable diminution could be stated in an attached document.

3. The remaining sheets 11 to 15 are guidance diagrams and notes relating to the reporting format and the procedure for the thickness measurements.

GENERAL PARTICULARS

Ship's name:
IMO number:
Class identity number:
Port of registry:
Gross tons:
Deadweight:
Date of build:
Classification society:

Name of Company performing thickness measurement:
Thickness measurement company certified by:
Certificate No:
Certificate valid from.....to.....
Place of measurement:
First date of measurement:
Last date of measurement:

Renewal survey/intermediate survey due:*
Details of measurement equipment:
Qualification of operators:

Report number:	consisting of	Sheets

Name of operator:	Name of surveyor:
Signature of operator:	Signature of surveyor:
Company official stamp:	Classification society official stamp:

* Delete as appropriate

[1)] The Recommended Procedures for Thickness Measurements are also applicable to chemical tankers.

Sheet 4
TM1-T

Report on Thickness Measurement of All Deck Plating, All Bottom Shell Plating or Side Shell Plating*
(*delete as appropriate)

Ship's name..... Class identity No. ..... Report No. .....

STRAKE POSITION																	
PLATE POSITION	No. or Letter	Org. Thk. mm	Forward Reading						Aft Reading						Mean Diminution %		Maximum Allowable Diminution
			Gauged		Diminution *P*		Diminution *S*		Gauged		Diminution *P*		Diminution *S*				
			P	*S*	mm	%	mm	%	*P*	*S*	mm	%	mm	%	*P*	*S*	mm
12th forward																	
11th																	
10th																	
9th																	
8th																	
7th																	
6th																	
5th																	
4th																	
3rd																	
2nd																	
1st																	
Amidships																	
1st aft																	
2nd																	
3rd																	
4th																	
5th																	
6th																	
7th																	
8th																	
9th																	
10th																	
11th																	
12th																	

Operators signature: .....

Notes:

1. *This report is to be used for recording the thickness measurement of:*

   A— *All strength deck plating within the cargo area.*

   B— *All keel, bottom shell plating and bilge plating within the cargo area.*

   C— *Side shell plating including selected wind and water strakes outside cargo area.*

   D— *All wind and water strakes within cargo area.*

2. *The strake position is to be clearly indicated as follows:*

   1. *For strength deck indicate the number of the strake of plating inboard from the stringer plate.*
   2. *For bottom plating indicate the number of the strake of plating outboard from the keel plate.*
   3. *For side shell plating give number of the strake of plating below sheer strake and letter as shown on shell expansion.*

3. *For oil tankers all deck plating strakes are to be recorded, for ore/oil ships only the deck plating strakes outside line of openings are to be recorded.*

4. *Measurements are to be taken at the forward and aft areas of all and where plates cross ballast/cargo tank boundaries separate measurements for the area of plating in way of each type of tank are to be recorded.*

5. *The single measurements recorded are to represent the average of multiple measurements.*

6. *The maximum allowable diminution could be stated in an attached document.*

Sheet 5
TM2-T(i)

Report on Thickness Measurement of Shell and Deck Plating (one, two or three transverse sections)

Ship's name..... Class identity No. ..... Report No. .....

STRENGTH DECK AND SHEERSTRAKE PLATING																											
	FIRST TRANSVERSE SECTION AT FRAME NUMBER									SECOND TRANSVERSE SECTION AT FRAME NUMBER									THIRD TRANSVERSE SECTION AT FRAME NUMBER								
STRAKE POSITION	**No. or Letter**	**Org. Thk.**	**Max. Alwb. Dim.**	**Gauged**		**Diminution P**		**Diminution S**		**No. or Letter**	**Org. Thk.**	**Max. Alwb. Dim.**	**Gauged**		**Diminution P**		**Diminution S**		**No. or Letter**	**Org. Thk.**	**Max. Alwb. Dim.**	**Gauged**		**Diminution P**		**Diminution S**	
		mm	mm	P	S	mm	%	mm	%		mm	mm	P	S	mm	%	mm	%		mm	mm	P	S	mm	%	mm	%
Stringer plate																											
1st strake inboard																											
2nd																											
3rd																											
4th																											
5th																											
6th																											
7th																											
8th																											
9th																											
10th																											
11th																											
12th																											
13th																											
14th																											
Centre strake																											
Sheer strake																											
TOPSIDE TOTAL																											

Operators signature: .....

Notes:

1. *This report form is to be used for recording the thickness measurements of: Strength deck plating and sheer strake plating transverse sections:*

   One, two or three sections within the cargo area comprising of the structural items (1), (2) and (3) as shown on the diagrams of typical transverse sections.

2. *For oil tankers all deck plating strakes are to be recorded and for ore/oil ships only the deck plating strakes outside the line of openings are to be recorded.*

3. *The topside area comprises deck plating, stringer plate and sheer strake (including rounded gunwales).*

4. *The exact frame station of measurement is to be stated.*

5. *The single measurements recorded are to represent the average of multiple measurements.*

6. *The maximum allowable diminution could be stated in an attached document.*

Sheet 6
TM2-T(ii)

Report on Thickness Measurement of Shell and Deck Plating (one, two or three transverse sections)

Ship's name..... Class identity No. ..... Report No. .....

SHELL PLATING																												
	FIRST TRANSVERSE SECTION AT FRAME NUMBER									SECOND TRANSVERSE SECTION AT FRAME NUMBER									THIRD TRANSVERSE SECTION AT FRAME NUMBER								
STRAKE POSITION	No. or Letter	Org. Thk.	Max. Alwb. Dim.	Gauged		Diminution P		Diminution S		No. or Letter	Org. Thk.	Max. Alwb. Dim.	Gauged		Diminution P		Diminution S		No. or Letter	Org. Thk.	Max. Alwb. Dim.	Gauged		Diminution P		Diminution S	
		mm	mm	P	S	mm	%	mm	%		mm	mm	P	S	mm	%	mm	%		mm	mm	P	S	mm	%	mm	%
1st below sheer strake																												
2nd																												
3rd																												
4th																												
5th																												
6th																												
7th																												
8th																												
9th																												
10th																												
11th																												
12th																												
13th																												
14th																												
15th																												
16th																												
17th																												
18th																												
19th																												
20th																												
keel strake																												
BOTTOM TOTAL																												

Operators signature: .....

Notes:

1. *This report form is to be used for recording the thickness measurements of: Shell plating transverse sections:*

   One, two or three sections within the cargo area comprising of the structural items (4), (5) and (6) and (7) as shown on the diagrams of typical transverse

sections.

2. *The bottom area comprises keel, bottom and bilge plating.*
3. *The exact frame station of measurement is to be stated.*
4. *The single measurements recorded are to represent the average of multiple measurements.*
5. *The maximum allowable diminution could be stated in an attached document.*

Sheet 7
TM3-T

Report on Thickness Measurement of Longitudinal Members (one, two or three transverse sections)

Ship's name..... Class identity No. ..... Report No. .....

SHELL PLATING																												
	FIRST TRANSVERSE SECTION AT FRAME NUMBER									SECOND TRANSVERSE SECTION AT FRAME NUMBER									THIRD TRANSVERSE SECTION AT FRAME NUMBER								
STRUCTURAL MEMBER	No. or Letter	Org. Thk.	Max. Alwb. Dim.	Gauged		Diminution P		Diminution S		No. or Letter	Org. Thk.	Max. Alwb. Dim.	Gauged		Diminution P		Diminution S		No. or Letter	Org. Thk.	Max. Alwb. Dim.	Gauged		Diminution P		Diminution S	
		mm	mm	P	S	mm	%	mm	%		mm	mm	P	S	mm	%	mm	%		mm	mm	P	S	mm	%	mm	%

Operators signature: .....

Notes:

1. *This report is to be used for recording the thickness measurements of: Longitudinal members at transverse sections:*

   One, two or three sections within the cargo area comprising of the appropriate structural items (8) to (20) as shown on the diagrams of typical transverse sections.

2. *The exact frame station of measurement is to be stated.*

3. *The single measurements recorded are to represent the average of multiple measurements.*

4. *The maximum allowable diminution could be stated in an attached document.*

Sheet 8
TM4-T

Report on Thickness Measurement of Transverse Structural Members
In the cargo oil and water ballast tanks within the cargo tank length

Ship's name..... Class identity No. ..... Report No. .....

TANK DESCRIPTION:									
LOCATION OF STRUCTURE:									
STRUCTURAL MEMBER	**ITEM**	**Original Thickness mm**	**Max. Alwb. Dim. mm**	**Gauged**		**Diminution P**		**Diminution S**	
				P	**S**	**mm**	**%**	**mm**	**%**

Operators signature: .....

Notes:

1. *This report is to be used for recording the thickness measurements of transverse structural members, comprising of the appropriate structural items (25) to (33) as shown on diagrams of typical transverse section.*
2. *Guidance for areas of measurement is indicated on Sheet 15 of this document.*
3. *The single measurements recorded are to represent the average of multiple measurements.*
4. *The maximum allowable diminution could be stated in an attached document.*

Sheet 9
TM5-T

Report on Thickness of W.T./O.T. Transverse Bulkheads
Within the cargo tank or cargo hold space

Ship's name..... Class identity No. ..... Report No. .....

TANK/HOLD DESCRIPTION:								
LOCATION OF STRUCTURE:					**FRAME NO.:**			
STRUCTURAL COMPONENT (PLATING/STIFFENER)	**Original Thickness mm**	**Max. Alwb. Dim. mm**	**Gauged**		**Diminution P**		**Diminution S**	
			Port	**Starboard**	**mm**	**%**	**mm**	**%**

Operators signature: .....

Notes:

1. *This report is to be used for recording the thickness measurement of W.T./O.T. transverse bulkheads.*
2. *Guidance for areas of measurement is indicated on Sheet 15 of this document.*
3. *The single measurements recorded are to represent the average of multiple measurements.*
4. *The maximum allowable diminution could be stated in an attached document.*

Sheet 10
TM6-T **Report on Thickness measurement of Miscellaneous Structural Members**

Ship's name..... Class identity No. ..... Report No. .....

STRUCTURAL MEMBER:									**SKETCH**
LOCATION OF STRUCTURE:									
STRUCTURAL COMPONENT (PLATING/STIFFENER)	**Original Thickness mm**	**Max. Alwb. Dim. mm**	**Gauged**		**Diminution P**		**Diminution S**		
			Port	**Starboard**	**mm**	**%**	**mm**	**%**	

Operators signature: .....

Notes:

1. *This report is to be used for recording the thickness measurement of miscellaneous structural members including the structural items (36), (37) and (38).*
2. *The single measurements recorded are to represent the average of multiple measurements.*
3. *The maximum allowable diminution could be stated in an attached document.*

Sheet 11

Thickness Measurement - Oil Tankers, Ore/Oil Ships and etc.

Oil Tanker - Typical Transverse Section Indicating Longitudinal and Transverse Members

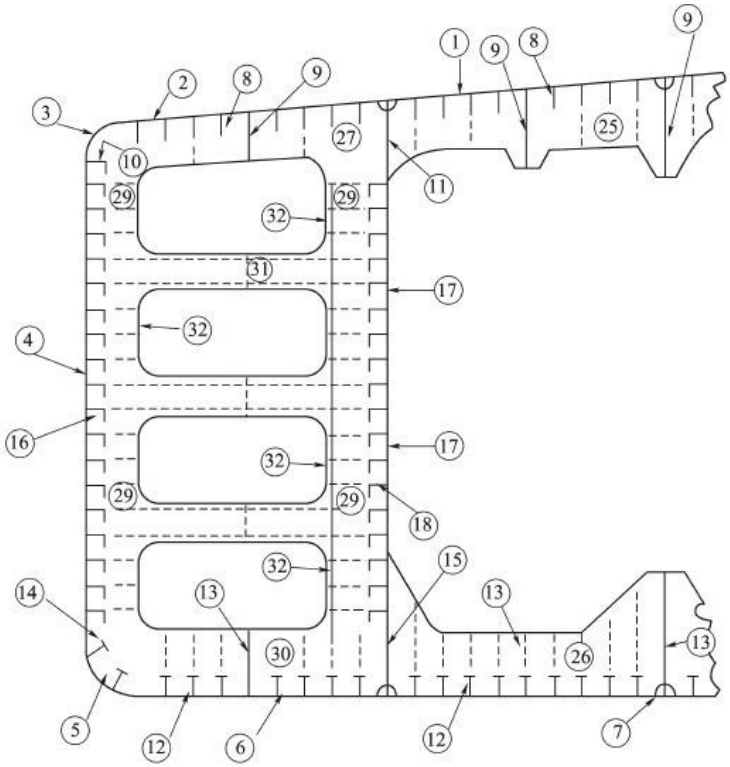

Report on TM2-T(1) & (2)	Report on TM3-T	Report on TM4-T
1. Strength deck plating 2. Stringer plate 3. Sheer strake 4. Side shell plating 5. Bilge plating 6. Bottom shell plating 7. Keel plate	8. Deck longitudinals 9. Deck girders 10. Sheer strake longitudinals 11. Longitudinal bulkhead top strake 12. Bottom longitudinals 13. Bottom girders 14. Bilge longitudinals 15. Longitudinal bulkhead lower strake 16. Side shell longitudinals 17. Longitudinal bulkhead plating (remainder) 18. Longitudinal bulkhead longitudinals 19. Inner bottom plating 20. Inner bottom longitudinals 21. 22. 23. 24.	25. Deck transverse centre tank 26. Bottom transverse centre tank 27. Deck transverse wing tank 28. Side shell vertical web 29. Longitudinal bulkhead vertical web 30. Bottom transverse wing tank 31. Struts 32. Transverse web face plate 33. D.B.Floors 34. 35.
		Report on TM6-T
		36. Hatch coamings 37. Deck plating between hatches 38. Hatch covers 39. 40.

Sheet 12

Thickness Measurement - Oil Tankers, Ore/Oil Ships and etc.

Oil/Ore Ship - Typical Transverse Section Indicating Longitudinal and Transverse Members

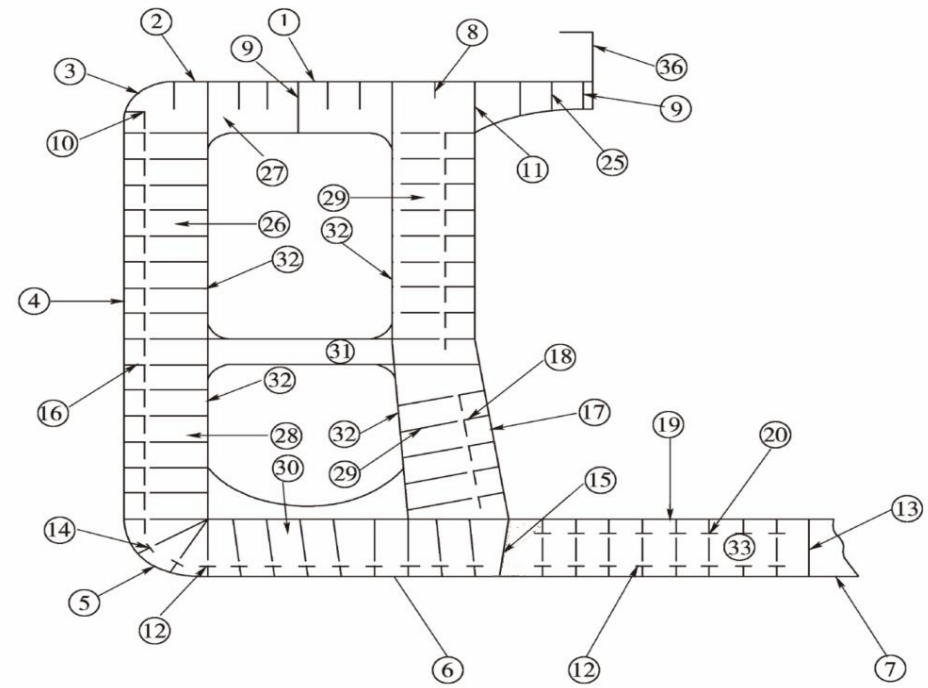

Report on TM2-T(1) & (2)	Report on TM3-T	Report on TM4-T
1. Strength deck plating	8. Deck longitudinals	25. Deck transverse centre tank
2. Stringer plate	9. Deck girders	26. Bottom transverse centre tank
3. Sheer strake	10. Sheer strake longitudinals	27. Deck transverse wing tank
4. Side shell plating	11. Longitudinal bulkhead top strake	28. Side shell vertical web
5. Bilge plating	12. Bottom longitudinals	29. Longitudinal bulkhead vertical web
6. Bottom shell plating	13. Bottom girders	30. Bottom transverse wing tank
7. Keel plate	14. Bilge longitudinals	31. Struts
	15. Longitudinal bulkhead lower strake	32. Transverse web face plate
	16. Side shell longitudinals	33. D.B.Floors
	17. Longitudinal bulkhead plating (remainder)	34.
	18. Longitudinal bulkhead longitudinals	35.
	19. Inner bottom plating	
	20. Inner bottom longitudinals	**Report on TM6-T**
	21.	36. Hatch coamings
	22.	37. Deck plating between hatches
	23.	38. Hatch covers
	24.	39.
		40.

Sheet 13

Thickness Measurement - Oil Tankers, Ore/Oil Ships and etc.

Transverse Section Outline

To be used for longitudinal and transverse members where typical oil tanker or oil/ore ship sections are not applicable

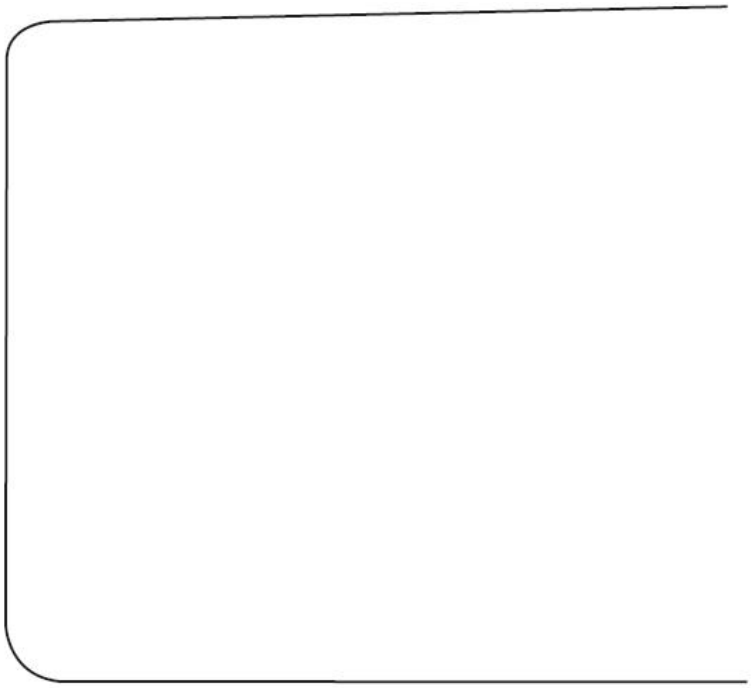

Report on TM2-T(1) & (2)	Report on TM3-T	Report on TM4-T
1. Strength deck plating	8. Deck longitudinals	25. Deck transverse centre tank
2. Stringer plate	9. Deck girders	26. Bottom transverse centre tank
3. Sheer strake	10. Sheer strake longitudinals	27. Deck transverse wing tank
4. Side shell plating	11. Longitudinal bulkhead top strake	28. Side shell vertical web
5. Bilge plating	12. Bottom longitudinals	29. Longitudinal bulkhead vertical web
6. Bottom shell plating	13. Bottom girders	30. Bottom transverse wing tank
7. Keel plate	14. Bilge longitudinals	31. Struts
	15. Longitudinal bulkhead lower strake	32. Transverse web face plate
	16. Side shell longitudinals	33. D.B.Floors
	17. Longitudinal bulkhead plating (remainder)	34.
	18. Longitudinal bulkhead longitudinals	35.
	19. Inner bottom plating	
	20. Inner bottom longitudinals	**Report on TM6-T**
	21.	36. Hatch coamings
	22.	37. Deck plating between hatches
	23.	38. Hatch covers
	24.	39.
		40.

Sheet 14

Thickness Measurement - Oil Tankers, Ore/Oil Ships and etc.

Typical Transverse Section Showing All Longitudinal Members to be Reported on TM2-T and TM3-T

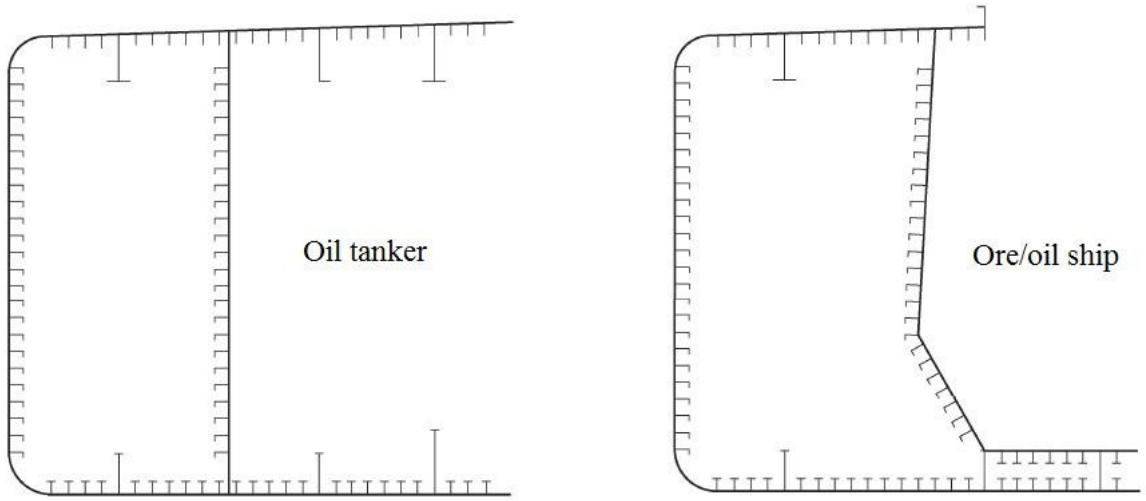

Sheet 15

Thickness Measurement - Oil Tankers, Ore/Oil Ships and etc.

Close-up Survey Requirements

Oil Tanker
Typical transverse section close-up survey

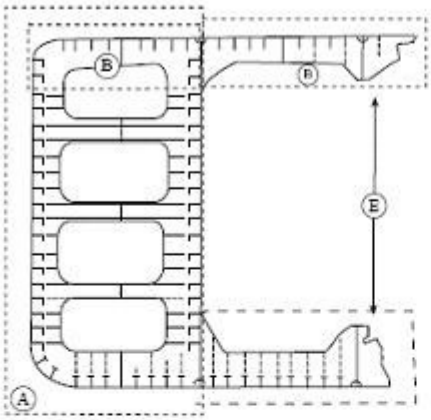

Thickness to be reported on
TM3-T and TM4-T as appropriate

Oil Tanker
Typical transverse bulkhead

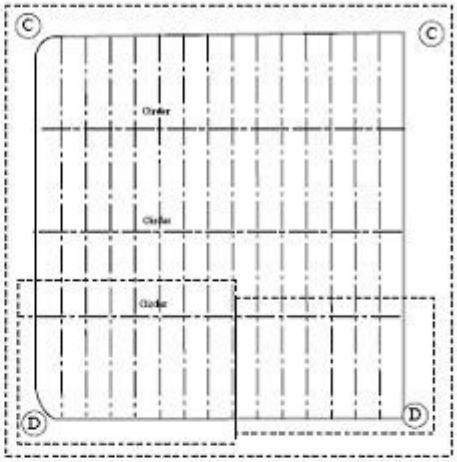

Thickness to be reported on TM5-T

Oil/Ore ship
Typical transverse section close-up survey

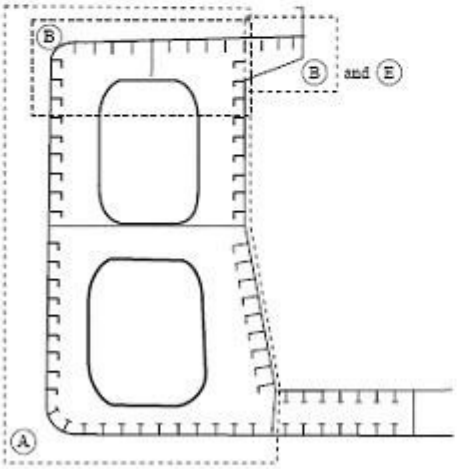

Thickness to be reported on
TM3-T and TM4-T as appropriate

Oil/Ore ship
Typical transverse bulkhead

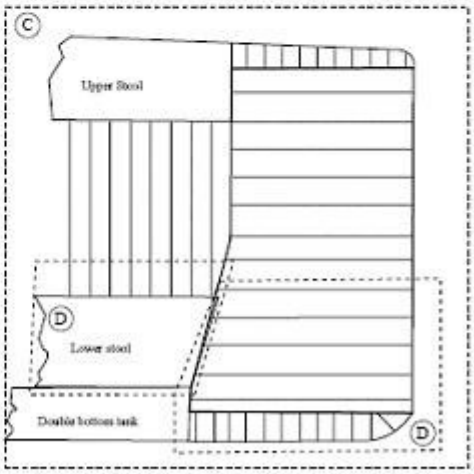

Thickness to be reported on TM5-T

Close-up survey
area

C. Recommended Procedures for Thickness Measurements of Bulk Carriers

Notes:

1. This document is to be used for recording thickness measurements of single side skin bulk carriers as required by Section 4.

2. Reporting forms TM1-BC, TM2-BC, TM3-BC, TM4-BC, TM5-BC, TM6-BC and TM7-BC (Sheets 4 to 11) are to be used for recording thickness measurements and the minimum allowable diminution is to be stated.

The minimum allowable diminution could be stated in an attached document.

3. The remaining Sheets 12 to 14 are guidance diagrams and notes relating to the reporting forms and the IACS Unified Requirements for thickness measurement.

4. The reporting forms are where appropriate, to be supplemented by data presented on structural sketches.

GENERAL PARTICULARS

Ship's name:
IMO number:
Class identity number:
Port of registry:
Gross tons:
Deadweight:
Date of build:
Classification society:

Name of Company performing thickness measurement:
Thickness measurement company certified by:
Certificate No:
Certificate valid from.....to.....
Place of measurement:
First date of measurement:
Last date of measurement:

Renewal survey/intermediate survey due:*
Details of measurement equipment:
Qualification of operators:

Report number:	consisting of	Sheets

Name of operator:	Name of surveyor:
Signature of operator:	Signature of surveyor:
Company official stamp:	Classification society official stamp:

* Delete as appropriate

Sheet 4
TM1-BC

Report on Thickness Measurement of All Deck Plating, All Bottom Shell Plating or Side Shell Plating*
(*delete as appropriate)

Ship's name..... Class identity No. ..... Report No. .....

STRAKE POSITION																	
PLATE POSITION	No. or Letter	Org. Thk. mm	Forward Reading						Aft Reading						Mean Diminution %		Maximum Allowable Diminution
			Gauged		Diminution *P*		Diminution *S*		Gauged		Diminution *P*		Diminution *S*				
			P	*S*	mm	%	mm	%	*P*	*S*	mm	%	mm	%	*P*	*S*	mm
12th forward																	
11th																	
10th																	
9th																	
8th																	
7th																	
6th																	
5th																	
4th																	
3rd																	
2nd																	
1st																	
Amidships																	
1st aft																	
2nd																	
3rd																	
4th																	
5th																	
6th																	
7th																	
8th																	
9th																	
10th																	
11th																	
12th																	

Operators signature: .....

Notes:

1. *This report is to be used for recording the thickness measurement of:*

   A— *All strength deck plating within cargo length area.*

   B— *Keel, bottom shell plating and bilge plating within the cargo length area.*

   C— *Side shell plating that is selected wind and water strakes within the cargo length area.*

   D— *Side shell plating that is all wind and water strakes outside the cargo length area.*

2. *The strake position is to be clearly indicated as follows:*

   1. *For strength deck indicate the number of the strake of plating inboard from the stringer plate.*
   2. *For bottom plating indicate the number of the strake of plating outboard from the keel plate*
   3. *For side shell plating give number of the strake of plating sheer strake and letter as shown on shell expansion.*

3. *Only the deck plating strakes outside line of openings are to be recorded.*

4. *Measurements are to be taken at the forward and aft areas of all plates and the single measurements recorded are to represent the average of multiple measurements.*

5. *The maximum allowable diminution could be stated in an attached document.*

Sheet 5
TM2-BC(i)

Report on Thickness Measurement of Shell and Deck Plating (one, two or three transverse sections)

Ship's name..... Class identity No. ..... Report No. .....

STRENGTH DECK AND SHEERSTRAKE PLATING																											
	FIRST TRANSVERSE SECTION AT FRAME NUMBER									SECOND TRANSVERSE SECTION AT FRAME NUMBER									THIRD TRANSVERSE SECTION AT FRAME NUMBER								
STRAKE POSITION	**No. or Letter**	**Org. Thk.**	**Max. Alwb. Dim.**	**Gauged**		**Diminution P**		**Diminution S**		**No. or Letter**	**Org. Thk.**	**Max. Alwb. Dim.**	**Gauged**		**Diminution P**		**Diminution S**		**No. or Letter**	**Org. Thk.**	**Max. Alwb. Dim.**	**Gauged**		**Diminution P**		**Diminution S**	
		mm	**mm**	**P**	**S**	**mm**	**%**	**mm**	**%**		**mm**	**mm**	**P**	**S**	**mm**	**%**	**mm**	**%**		**mm**	**mm**	**P**	**S**	**mm**	**%**	**mm**	**%**
Stringer plate																											
1st strake inboard																											
2nd																											
3rd																											
4th																											
5th																											
6th																											
7th																											
8th																											
9th																											
10th																											
11th																											
12th																											
13th																											
14th																											
Centre strake																											
Sheer strake																											
TOPSIDE TOTAL																											

Operators signature: .....

Notes:

1. *This report is to be used for recording the thickness measurement of: Strength deck plating and sheer strake plating transverse sections:*

   Two or three sections within the cargo length area, comprising of the structural items (1), (2) and (3) as shown on the diagram of typical transverse section.

2. *Only the deck plating strakes outside the line of openings are to be recorded.*

3. *The topside area comprises deck plating, stringer plate and sheer strake (including rounded gunwales).*

4. *The exact frame station of measurement is to be stated.*

5. *The single measurements recorded are to represent the average of multiple measurements.*

6. *The maximum allowable diminution could be stated in an attached document.*

Sheet 6
TM2-BC(ii)

Report on Thickness Measurement of Shell and Deck Plating (one, two or three transverse sections)

Ship's name..... Class identity No. ..... Report No. .....

SHELL PLATING																												
	FIRST TRANSVERSE SECTION AT FRAME NUMBER									SECOND TRANSVERSE SECTION AT FRAME NUMBER									THIRD TRANSVERSE SECTION AT FRAME NUMBER								
STRAKE POSITION	No. or Letter	Org. Thk.	Max. Alwb. Dim.	Gauged		Diminution P		Diminution S		No. or Letter	Org. Thk.	Max. Alwb. Dim.	Gauged		Diminution P		Diminution S		No. or Letter	Org. Thk.	Max. Alwb. Dim.	Gauged		Diminution P		Diminution S	
		mm	mm	P	S	mm	%	mm	%		mm	mm	P	S	mm	%	mm	%		mm	mm	P	S	mm	%	mm	%
1st below sheer strake																												
2nd																												
3rd																												
4th																												
5th																												
6th																												
7th																												
8th																												
9th																												
10th																												
11th																												
12th																												
13th																												
14th																												
15th																												
16th																												
17th																												
18th																												
19th																												
20th																												
keel strake																												
BOTTOM TOTAL																												

Operators signature: .....

Notes:

1. *This report is to be used for recording the thickness measurement of: Shell plating transverse sections:*

   Two or three sections within cargo length area comprising of the structural (4), (5), (6) and (7) as shown on the diagram of typical transverse section.

2. *The bottom area comprises keel, bottom and bilge plating.*

3. *The exact frame station of measurement is to be stated.*

4. *The single measurements recorded are to represent the average of multiple measurements.*

5. *The maximum allowable diminution could be stated in an attached document.*

Sheet 7
TM3-BC

Report on Thickness Measurement of Longitudinal Members (one, two or three transverse sections)

Ship's name..... Class identity No. ..... Report No. .....

SHELL PLATING																												
	FIRST TRANSVERSE SECTION AT FRAME NUMBER									SECOND TRANSVERSE SECTION AT FRAME NUMBER									THIRD TRANSVERSE SECTION AT FRAME NUMBER								
STRUCTURAL MEMBER	Item No.	Org. Thk.	Max. Alwb. Dim.	Gauged		Diminution P		Diminution S		Item No.	Org. Thk.	Max. Alwb. Dim.	Gauged		Diminution P		Diminution S		Item No.	Org. Thk.	Max. Alwb. Dim.	Gauged		Diminution P		Diminution S	
		mm	mm	P	S	mm	%	mm	%		mm	mm	P	S	mm	%	mm	%		mm	mm	P	S	mm	%	mm	%

Operators signature: .....

Notes:

1. *This report is to be used for recording the thickness measurement of: Longitudinal members at transverse sections:*

   One, two or three sections within the cargo length area, comprising of the appropriate structural items (8) to (20) as shown on diagram of typical transverse section.

2. *The exact frame station of measurement is to be stated.*

3. *The single measurements recorded are to represent the average of multiple measurements.*

4. *The maximum allowable diminution could be stated in an attached document.*

Sheet 8
TM4-BC

Report on Thickness Measurement of Transverse Structural Members
In the double bottom, hopper side and topside water ballast tanks

Ship's name..... Class identity No. ..... Report No. .....

TANK DESCRIPTION:									
LOCATION OF STRUCTURE:									
STRUCTURAL MEMBER	**ITEM**	**Original Thickness mm**	**Max. Alwb. Dim. mm**	**Gauged**		**Diminution P**		**Diminution S**	
				P	**S**	**mm**	**%**	**mm**	**%**

Operators signature: .....

Notes:

1. *This report is to be used for recording the thickness measurement of transverse structural members, comprising of the appropriate structural items (23) to (25) as shown on diagram of typical transverse section, Sheet 12 of this document.*
2. *Guidance for areas if measurement is indicated on the diagrams shown on Sheet 14 of this document.*
3. *The single measurements recorded are to represent the average of multiple measurements.*
4. *The maximum allowable diminution could be stated in an attached document.*

Sheet 9
TM5-BC **Report on Thickness of Cargo Hold Transverse Bulkheads**

Ship's name..... Class identity No. ..... Report No. .....

LOCATION OF STRUCTURE:									**FRAME NO.:**
STRUCTURAL COMPONENT (PLATING/STIFFENER)									
	Original Thickness mm	**Max. Alwb. Dim. mm**	**Gauged**		**Diminution P**		**Diminution S**		
			Port	**Starboard**	**mm**	**%**	**mm**	**%**	

Operators signature: .....

Notes:

1. *This report form is to be used for recording the thickness measurement of cargo hold transverse bulkheads.*
2. *Guidance for areas of measurement is indicated on the diagrams shown on Sheet 14 of this document.*
3. *The single measurements recorded are to represent the average of multiple measurements.*
4. *The maximum allowable diminution could be stated in an attached document.*

Sheet 10
TM6-BC Report on Thickness measurement of Miscellaneous Structural Members

Ship's name..... Class identity No. ..... Report No. .....

STRUCTURAL MEMBER:									**SKETCH**
LOCATION OF STRUCTURE:									
Description	**Original Thickness mm**	**Max. Alwb. Dim. mm**	**Gauged**		**Diminution P**		**Diminution S**		
			P	**S**	**mm**	**%**	**mm**	**%**	

Operators signature: .....

Notes:

1. *This report is to be used for recording the thickness measurement of miscellaneous structural members including the structural items (28), (29) and (30) as shown on diagram of typical transverse section, Sheet 12 of this document.*
2. *Guidance for areas of measurement is indicated on Sheet 14 of this document.*
3. *The single measurements recorded are to represent the average of multiple measurements.*
4. *The maximum allowable diminution could be stated in an attached document.*

Sheet 11
TM7-BC

Report on Thickness Measurement of Cargo Hold Transverse Frames

Ship's name..... Class identity No. ..... Report No. .....

	CARGO HOLD NO.																							
	UPPER PART								MID PART								LOWER PART							
FRAME NUMBER	Org. Thk.	Max. Alwb. Dim.	Gauged		Diminution P		Diminution S		Org. Thk.	Max. Alwb. Dim.	Gauged		Diminution P		Diminution S		Org. Thk.	Max. Alwb. Dim.	Gauged		Diminution P		Diminution S	
	mm	mm	P	S	mm	%	mm	%	mm	mm	P	S	mm	%	mm	%	mm	mm	P	S	mm	%	mm	%

Operators signature: .....

Notes:

1. *This report is to be used for recording the thickness measurement of: Cargo hold transverse frames; Structural item number (34) as shown on the diagram of*

typical transverse section, Sheet 12 of this document.

2. *Guidance for areas of measurement is indicated on the diagrams shown on Sheet 14 of this document. The single measurements recorded are to represent the average of multiple measurements.*

3. *The location and pattern of measurements is to be indicated on the sketches of hold frames shown below.*

4. *The maximum allowable diminution could be stated in an attached document.*

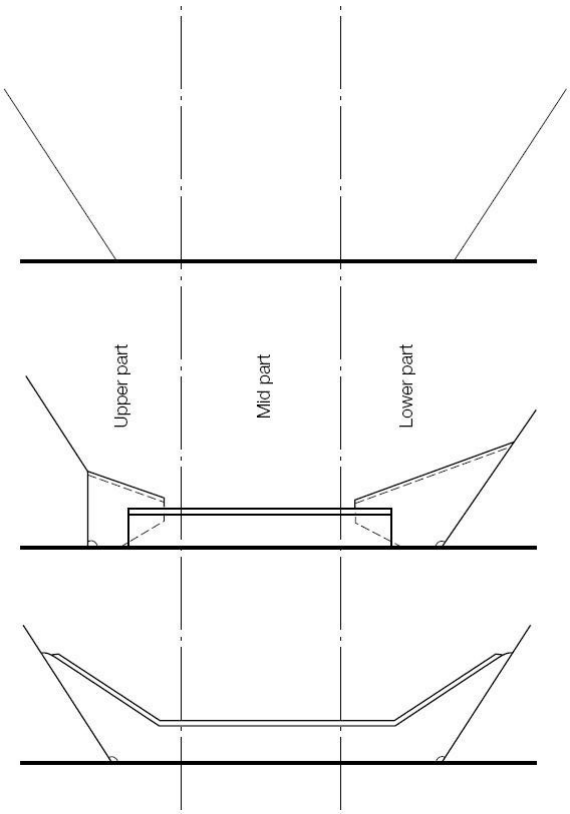

Typical transverse frames in cargo hold Thickness gauging area (A)

Non-typical transverse frames in cargo hold Thickness gauging area (A)

Sheet 11(1)
TM7-BC S31

Report on Thickness Measurement of Cargo Hold Side Shell Frames

Ship's name..... Class identity No. ..... Report No. .....

CARGO HOLD NO.:													**Side.:**						**(Port / stb.)**					
	ZONE A						**ZONE B**						**ZONE C**						**ZONE D**					
FRAME NO	**Org. Thk.**	**t_{REN}**	**t_{COAT}**	**t_M**	**Diminution**		**Org. Thk.**	**t_{REN}**	**t_{COAT}**	**t_M**	**Diminution**		**Org. Thk.**	**t_{REN}**	**t_{COAT}**	**t_M**	**Diminution**		**Org. Thk.**	**t_{REN}**	**t_{COAT}**	**t_M**	**Diminution**	
	mm	**mm**	**mm**	**mm**	**mm**	**%**	**mm**	**mm**	**mm**	**mm**	**mm**	**%**	**mm**	**mm**	**mm**	**mm**	**mm**	**%**	**mm**	**mm**	**mm**	**mm**	**mm**	**%**

Operators signature: .....

Notes:

1. *This report is to be used for recording the thickness measurement of: Cargo hold transverse frames for application of UR S31.*
2. *Guidance for areas of measurement is provided in Appendix 6 to this Chapter.*

3. *The maximum allowable diminution could be stated in an attached document.*

Sheet 12

Thickness measurement – Bulk Carriers

Typical Transverse Section Indicating Longitudinal and Transverse Members

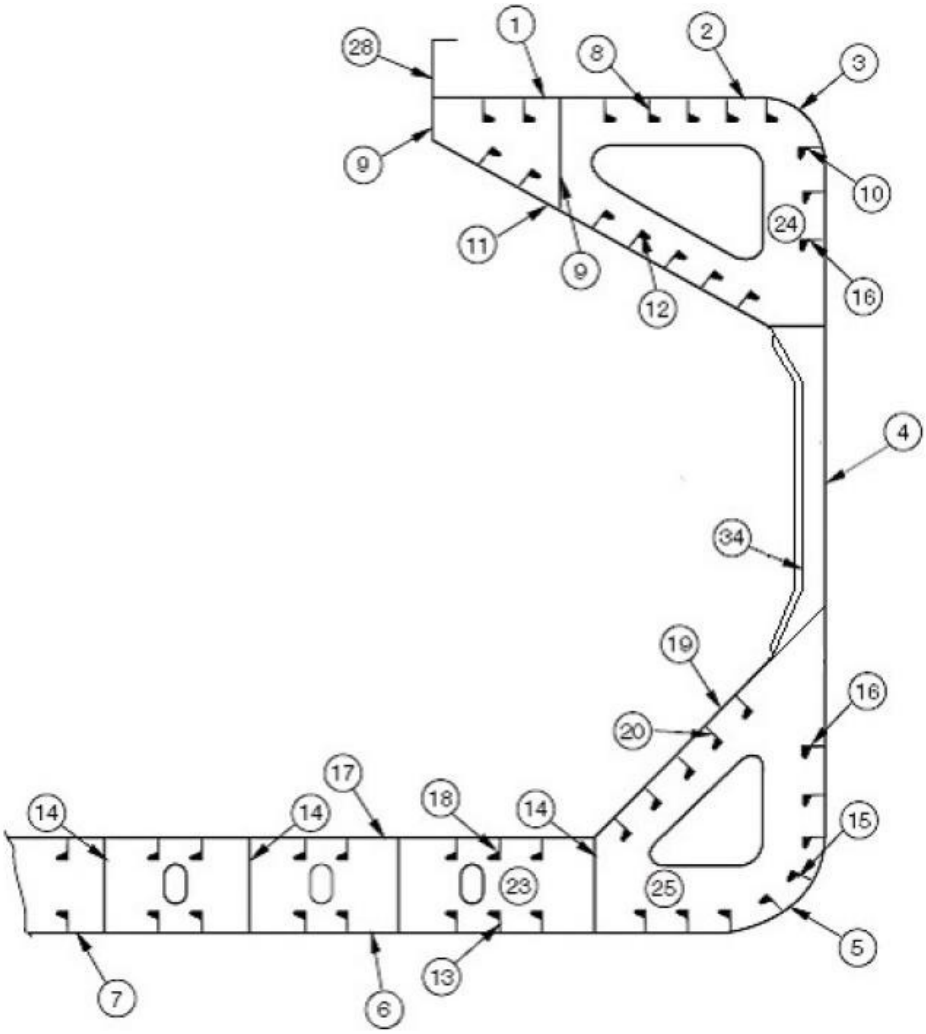

Report on TM2-BC	Report on TM3-BC	Report on TM4-BC
1. Strength deck plating 2. Stringer plate 3. Sheer strake 4. Side shell plating 5. Bilge plating 6. Bottom shell plating 7. Keel plate	8. Deck longitudinals 9. Deck girders 10. Sheer strake longitudinals 11. Topside tank sloping plating 12. Topside tank sloping plating longitudinals 13. Bottom longitudinals 14. Bilge girders 15. Bilge longitudinals 16. Side shell longitudinals 17. Inner bottom plating 18. Inner bottom longitudinals 19. Hopper side plating 20. Hopper side longitudinals 21. 22.	23. Double bottom tank floors 24. Topside tank transverses 25. Hopper side tank transverses 26. 27.
Report on TM7-BC		**Report on TM6-BC**
34. Hold frames or diaphragms		28. Hatch coamings 29. Deck plating between hatches 30. Hatch covers 31. 32. 33.

Sheet 13

Thickness Measurement – Bulk Carriers: Typical Transverse Section Outline

To be used for longitudinal and transverse members where the typical bulk carrier section is not applicable

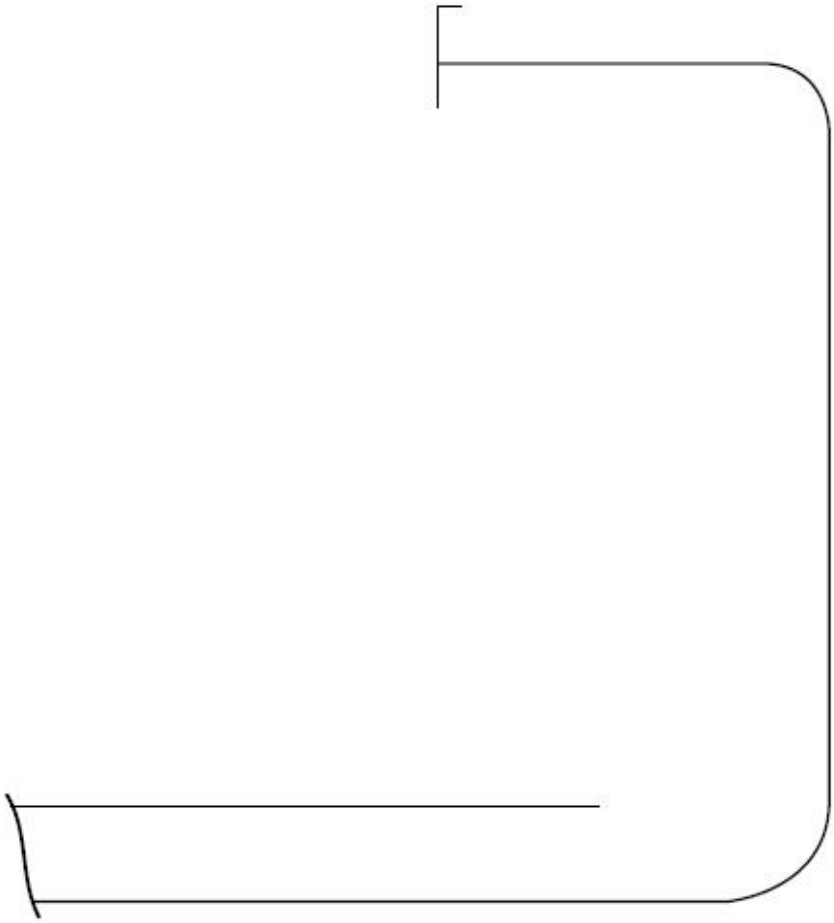

Report on TM2-BC	Report on TM3-BC	Report on TM4-BC
1. Strength deck plating 2. Stringer plate 3. Sheer strake 4. Side shell plating 5. Bilge plating 6. Bottom shell plating 7. Keel plate	8. Deck longitudinals 9. Deck girders 10. Sheer strake longitudinals 11. Topside tank sloping plating 12. Topside tank sloping plating longitudinals 13. Bottom longitudinals 14. Bilge girders 15. Bilge longitudinals 16. Side shell longitudinals 17. Inner bottom plating 18. Inner bottom longitudinals 19. Hopper side plating 20. Hopper side longitudinals 21. 22.	23. Double bottom tank floors 24. Topside tank transverses 25. Hopper side tank transverses 26. 27.
		Report on TM6-BC
		28. Hatch coamings 29. Deck plating between hatches 30. Hatch covers 31. Inner bulkhead plating 32. 33.
Report on TM7-BC		
34. Hold frames or diaphragms		

Sheet 14

Close-up Survey and Thickness Measurement Areas

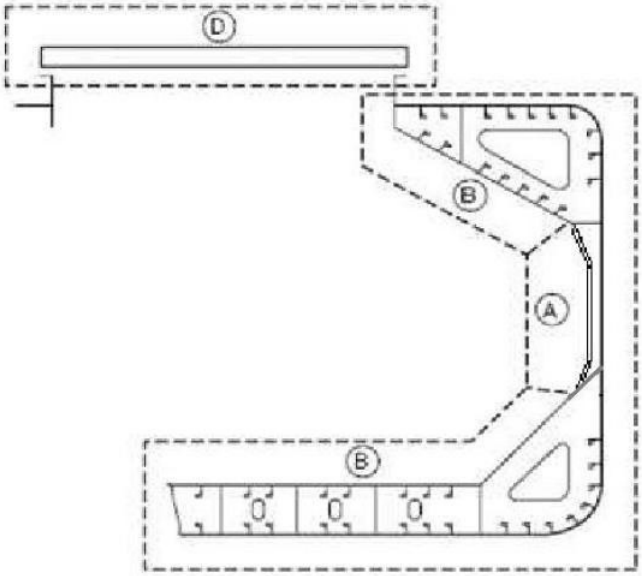

Thickness to be reported on TM3-BC, TM4-BC, TM6-BC and TM7-BC as appropriate

A cargo hold, transverse bulkhead

Area C

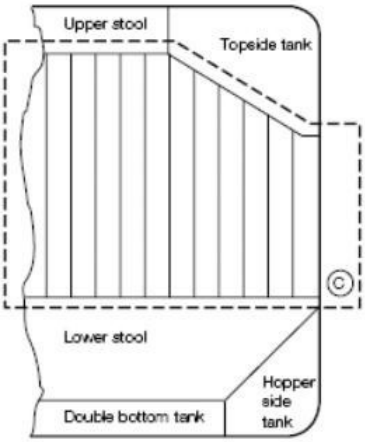

Thickness to be reported on TM5-BC

Typical areas of deck plating inside line
of hatch openings between cargo hold hatches

Area E

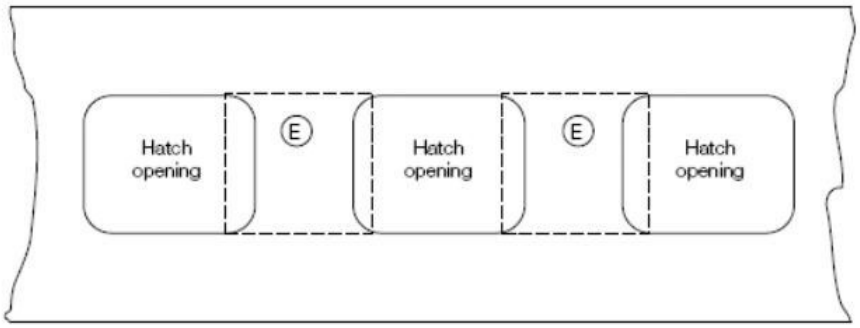

Thickness to be reported on TM6-BC

D. Recommended Procedures for Thickness Measurements of Double Hull Oil Tankers

Notes:

1. This document is to be used for recording thickness measurements as required by Section 4,I.E.

2. Reporting forms TM1-DHT, TM2-DHT, TM3-DHT, TM4-DHT, TM5-DHT and TM6-DHT (Sheets 4 to 10) are to be used for recording thickness measurements and the maximum allowable diminution is to be stated.

The maximum allowable diminution could be stated in an attached document.

3. The remaining Sheets 11 to 15 are guidance diagrams and notes relating to the reporting forms and the procedure for the thickness measurements.

GENERAL PARTICULARS

Ship's name:
IMO number:
Class identity number:
Port of registry:
Gross tons:
Deadweight:
Date of build:
Classification society:

Name of Company performing thickness measurement:
Thickness measurement company certified by:
Certificate No:
Certificate valid from.....to.....
Place of measurement:
First date of measurement:
Last date of measurement:

Renewal survey/intermediate survey due:[1)]
Details of measurement equipment:
Qualification of operators:

Report number:	consisting of	Sheets

Name of operator:	Name of surveyor:
Signature of operator:	Signature of surveyor:
Company official stamp:	Classification society official stamp:

* Delete as appropriate.

Sheet 4
TM1-DHT

Report on Thickness Measurement of All Deck Plating, All Bottom Shell Plating or Side Shell Plating*
(*delete as appropriate)

Ship's name..... Class identity No. ..... Report No. .....

STRAKE POSITION																	
PLATE POSITION	**No. or Letter**	**Org. Thk. mm**	**Forward Reading**						**Aft Reading**						**Mean Diminution %**		**Maximum Allowable Diminution**
			Gauged		**Diminution *P***		**Diminution *S***		**Gauged**		**Diminution *P***		**Diminution *S***				
			P	***S***	**mm**	**%**	**mm**	**%**	***P***	***S***	**mm**	**%**	**mm**	**%**	***P***	***S***	**mm**
12th forward																	
11th																	
10th																	
9th																	
8th																	
7th																	
6th																	
5th																	
4th																	
3rd																	
2nd																	
1st																	
Amidships																	
1st aft																	
2nd																	
3rd																	
4th																	
5th																	
6th																	
7th																	
8th																	
9th																	
10th																	
11th																	
12th																	

Operators signature: .....

Notes:

1. *This report is to be used for recording the thickness measurement of:*

   A— *All strength deck plating within the cargo area.*

   B— *All keel, bottom shell plating and bilge plating within the cargo area.*

   C— *Side shell plating including selected wind and water strakes outside cargo area.*

   D— *All wind and water strakes within cargo area.*

2. *The strake position is to be clearly indicated as follows:*

   1. *For strength deck indicate the number of the strake of plating inboard from the stringer plate.*
   2. *For bottom plating indicate the number of the strake of plating outboard from the keel plate.*
   3. *For side shell plating give number of the strake of plating below sheer strake and letter as shown on shell expansion.*
   4. *Measurements are to be taken at the forward and aft areas of all and where plates cross ballast/cargo tank boundaries separate measurements for the area of plating in way of each type of tank are to be recorded.*

3. *The single measurements recorded are to represent the average of multiple measurements.*

4. *The maximum allowable diminution could be stated in an attached document.*

Sheet 5
TM2-DHT(i)

Report on Thickness Measurement of Shell and Deck Plating (one, two or three transverse sections)

Ship's name..... Class identity No. ..... Report No. .....

STRENGTH DECK AND SHEERSTRAKE PLATING																											
	FIRST TRANSVERSE SECTION AT FRAME NUMBER									SECOND TRANSVERSE SECTION AT FRAME NUMBER									THIRD TRANSVERSE SECTION AT FRAME NUMBER								
STRAKE POSITION	**No. or Letter**	**Org. Thk.**	**Max. Alwb. Dim.**	**Gauged**		**Diminution P**		**Diminution S**		**No. or Letter**	**Org. Thk.**	**Max. Alwb. Dim.**	**Gauged**		**Diminution P**		**Diminution S**		**No. or Letter**	**Org. Thk.**	**Max. Alwb. Dim.**	**Gauged**		**Diminution P**		**Diminution S**	
		mm	**mm**	**P**	**S**	**mm**	**%**	**mm**	**%**		**mm**	**mm**	**P**	**S**	**mm**	**%**	**mm**	**%**		**mm**	**mm**	**P**	**S**	**mm**	**%**	**mm**	**%**
Stringer plate																											
1st strake inboard																											
2nd																											
3rd																											
4th																											
5th																											
6th																											
7th																											
8th																											
9th																											
10th																											
11th																											
12th																											
13th																											
14th																											
Centre strake																											
Sheer strake																											
TOPSIDE TOTAL																											

Operators signature: .....

Notes:

1. *This report form is to be used for recording the thickness measurements of:*

   Strength deck plating and sheer strake plating transverse sections:

   One, two or three sections within the cargo area comprising of the structural items (0), (1) and (2) as shown on the diagrams of typical transverse sections

illustrated on Sheets 11 and 12 of this document.

2. *The topside area comprises deck plating, stringer plate and sheer strake (including rounded gunwales).*
3. *The exact frame station of measurement is to be stated.*
4. *The single measurements recorded are to represent the average of multiple measurements.*
5. *The maximum allowable diminution could be stated in an attached document.*

Sheet 6
TM2-DHT(ii)

Report on Thickness Measurement of Shell and Deck Plating (one, two or three transverse sections)

Ship's name…… Class identity No. …… Report No. ……

SHELL PLATING																											
	FIRST TRANSVERSE SECTION AT FRAME NUMBER									SECOND TRANSVERSE SECTION AT FRAME NUMBER									THIRD TRANSVERSE SECTION AT FRAME NUMBER								
STRAKE POSITION	No. or Letter	Org. Thk.	Max. Alwb. Dim.	Gauged		Diminution P		Diminution S		No. or Letter	Org. Thk.	Max. Alwb. Dim.	Gauged		Diminution P		Diminution S		No. or Letter	Org. Thk.	Max. Alwb. Dim.	Gauged		Diminution P		Diminution S	
		mm	mm	P	S	mm	%	mm	%		mm	mm	P	S	mm	%	mm	%		mm	mm	P	S	mm	%	mm	%
1st below sheer strake																											
2nd																											
3rd																											
4th																											
5th																											
6th																											
7th																											
8th																											
9th																											
10th																											
11th																											
12th																											
13th																											
14th																											
15th																											
16th																											
17th																											
18th																											
19th																											
20th																											
keel strake																											
BOTTOM TOTAL																											

Operators signature: ……

Notes:

1. *This report form is to be used for recording the thickness measurements of:*

   Shell plating transverse sections:

One, two or three sections within the cargo area comprising of the structural items (3), (4) and (5) and (6) as shown on the diagrams of typical transverse sections illustrated on Sheets 11 and 12 of this document.

2. *The bottom area comprises keel, bottom and bilge plating.*
3. *The exact frame station of measurement is to be stated.*
4. *The single measurements recorded are to represent the average of multiple measurements.*
5. *The maximum allowable diminution could be stated in an attached document.*

Sheet 7
TM3-DHT

Report on Thickness Measurement of Longitudinal Members (one, two or three transverse sections)

Ship's name…… Class identity No. …….. Report No. ……..

SHELL PLATING																												
	FIRST TRANSVERSE SECTION AT FRAME NUMBER									SECOND TRANSVERSE SECTION AT FRAME NUMBER									THIRD TRANSVERSE SECTION AT FRAME NUMBER								
STRUCTURAL MEMBER	Item No.	Org. Thk.	Max. Alwb. Dim.	Gauged		Diminution P		Diminution S		Item No.	Org. Thk.	Max. Alwb. Dim.	Gauged		Diminution P		Diminution S		Item No.	Org. Thk.	Max. Alwb. Dim.	Gauged		Diminution P		Diminution S	
		mm	mm	P	S	mm	%	mm	%		mm	mm	P	S	mm	%	mm	%		mm	mm	P	S	mm	%	mm	%

Operators signature: ……

Notes:

1. *This report is to be used for recording the thickness measurements of:*

   Longitudinal members at transverse sections:

   One, two or three sections within the cargo area comprising of the appropriate structural items (10) to (29) as shown on the diagrams of typical transverse sections illustrated on Sheets 11 and 12 of this document.

2. *The exact frame station of measurement is to be stated.*

3. *The single measurements recorded are to represent the average of multiple measurements.*

4. *The maximum allowable diminution could be stated in an attached document.*

Sheet 8
TM4-DHT

Report on Thickness Measurement of Transverse Structural Members
In the cargo oil and water ballast tanks within the cargo tank length

Ship's name..... Class identity No. ..... Report No. .....

TANK DESCRIPTION:									
LOCATION OF STRUCTURE:									
STRUCTURAL MEMBER	**ITEM**	**Original Thickness mm**	**Max. Alwb. Dim. mm**	**Gauged**		**Diminution P**		**Diminution S**	
				P	**S**	**mm**	**%**	**mm**	**%**

Operators signature: .....

Notes:

1. *This report is to be used for recording the thickness measurements of:*

   Transverse structural members, comprising of the appropriate structural items (30) to (36) as shown on diagrams of typical transverse sections illustrated on Sheets 11 and 12 of this document.

2. *Guidance for areas of measurement is indicated on Sheets 14 and 15 of this document.*

3. *The single measurements recorded are to represent the average of multiple measurements.*

4. *The maximum allowable diminution could be stated in an attached document.*

Sheet 9
TM5-DHT

Report on Thickness of W.T./O.T. Transverse Bulkheads
Within the cargo tank or cargo hold space

Ship's name..... Class identity No. ..... Report No. .....

TANK/HOLD DESCRIPTION:								
LOCATION OF STRUCTURE:					**FRAME NO.:**			
STRUCTURAL COMPONENT (PLATING/STIFFENER)	**Original Thickness mm**	**Max. Alwb. Dim. mm**	**Gauged**		**Diminution P**		**Diminution S**	
			Port	**Starboard**	**mm**	**%**	**mm**	**%**

Operators signature: .....

Notes:

1. *This report is to be used for recording the thickness measurement of: W.T./O.T. transverse bulkheads*
2. *Guidance for areas of measurement is indicated on Sheet 14 of this document.*
3. *The single measurements recorded are to represent the average of multiple measurements.*
4. *The maximum allowable diminution could be stated in an attached document.*

Sheet 10
TM6-DHT Report on Thickness measurement of Miscellaneous Structural Members

Ship's name..... Class identity No. ..... Report No. .....

STRUCTURAL MEMBER:									**SKETCH**
LOCATION OF STRUCTURE:									
Description	**Org. Thk. mm**	**Max. Alwb. Dim. mm**	**Gauged**		**Diminution P**		**Diminution S**		
			P	**S**	**mm**	**%**	**mm**	**%**	

Operators signature: .....

Notes:

1. *This report is to be used for recording the thickness measurement of:*

   Miscellaneous structural members.

2. *The single measurements recorded are to represent the average of multiple measurements.*

3. *The maximum allowable diminution could be stated in an attached document.*

Sheet 11

Thickness Measurement – Double Hull Oil Tankers

Typical Transverse Section of a Double Hull Tanker up to 150,000 dwt with Indication of Longitudinal and Transverse Members

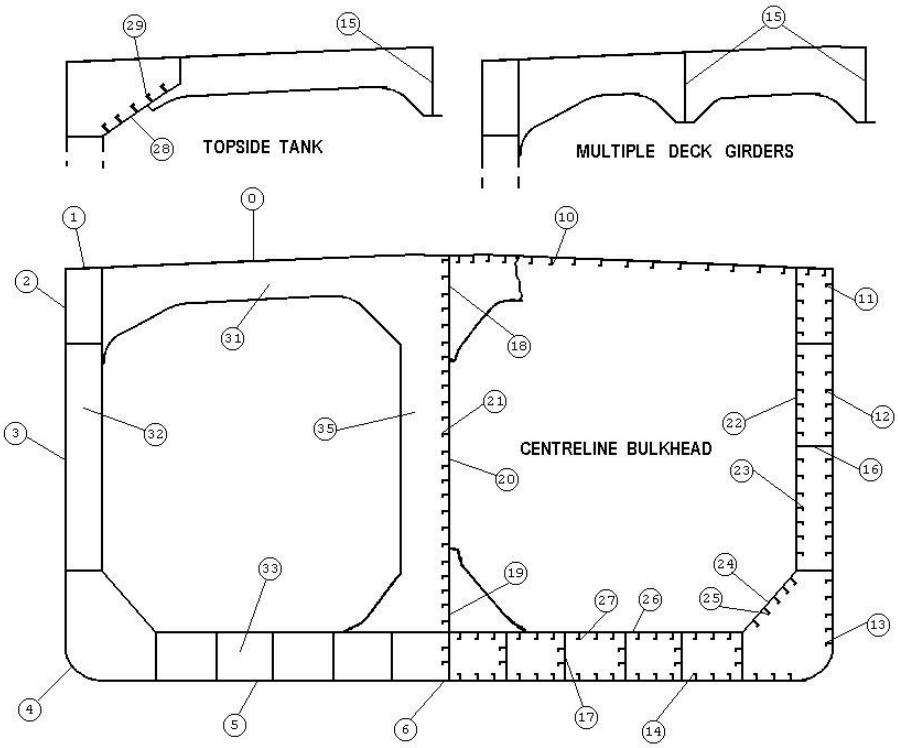

Report on TM2-DHT (i) & (ii)	Report on TM3-DHT		Report on TM4-DHT
0. Strength deck plating	10. Deck longitudinals	20. Longitudinal bulkhead plating (remainder)	30. Deck transverse (centre tank)
1. Stringer plate	11. Sheer strake longitudinals	21. Longitudinal bulkhead longitudinals	31. Deck transverse (wing tank)
2. Sheer strake	12. Side shell longitudinals	22. Inner side plating	32. Vertical web in wing ballast tank
3. Side shell plating	13. Bilge longitudinals	23. Inner side longitudinals	33. Double bottom floor – wing tank
4. Bilge plating	14. Bottom longitudinals	24. Hopper plating	34. Double bottom floor – centre tank
5. Bottom shell plating	15. Deck girders	25. Hopper longitudinals	35. Longitudinal bulkhead vertical web
6. Keel plate	16. Horizontal girders in wing ballast tanks	26. Inner bottom plating	36. Cross ties
	17. Bottom girders	27. Inner bottom longitudinals	
	18. Longitudinal bulkhead top strake	28. Topside tank plating	
	19. Longitudinal bulkhead bottom strake	29. Topside tank longitudinals	

Sheet 12

Thickness Measurement – Double Hull Oil Tankers

Typical Transverse Section of a Double Hull Tanker above 150,000 dwt with Indication of Longitudinal and Transverse Members

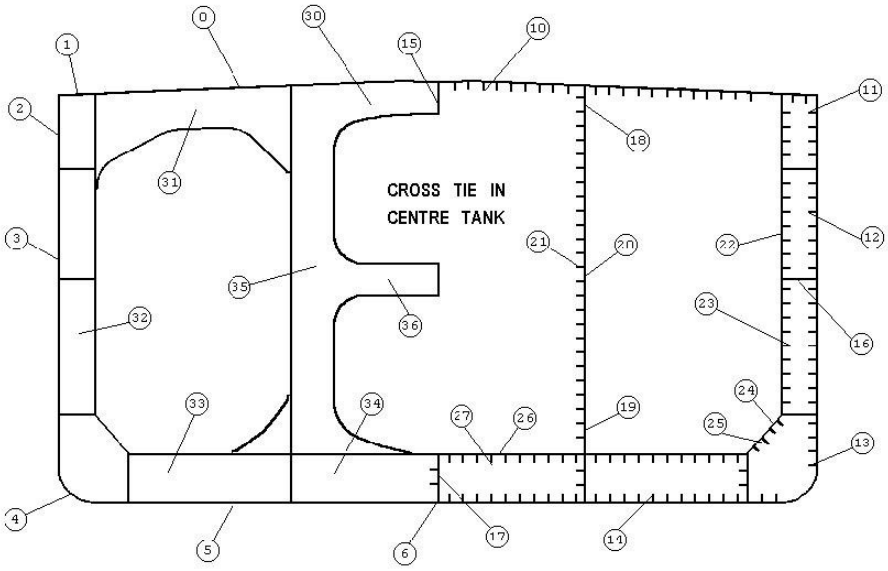

Report on TM2-DHT (i) & (ii)	Report on TM3-DHT		Report on TM4-DHT
0. Strength deck plating	10. Deck longitudinals	20. Longitudinal bulkhead plating (remainder)	30. Deck transverse (centre tank)
1. Stringer plate	11. Sheer strake longitudinals	21. Longitudinal bulkhead longitudinals	31. Deck transverse (wing tank)
2. Sheer strake	12. Side shell longitudinals	22. Inner side plating	32. Vertical web in wing ballast tank
3. Side shell plating	13. Bilge longitudinals	23. Inner side longitudinals	33. Double bottom floor – wing tank
4. Bilge plating	14. Bottom longitudinals	24. Hopper plating	34. Double bottom floor – centre tank
5. Bottom shell plating	15. Deck girders	25. Hopper longitudinals	35. Longitudinal bulkhead vertical web
6. Keel plate	16. Horizontal girders in wing ballast tanks	26. Inner bottom plating	36. Cross ties
	17. Bottom girders	27. Inner bottom longitudinals	
	18. Longitudinal bulkhead top strake	28. Topside tank plating	
	19. Longitudinal bulkhead bottom strake	29. Topside tank longitudinals	

Sheet 13

Thickness Measurement – Double Hull Oil Tankers

Transverse Section Outline

The diagram may be used for those ships where the diagrams on Sheets 11 and 12 are not suitable.

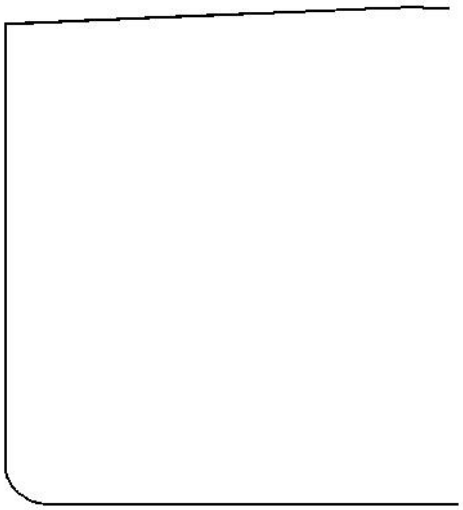

Report on TM2-DHT (i) & (ii)	Report on TM3-DHT		Report on TM4-DHT
0. Strength deck plating	10. Deck longitudinals	20. Longitudinal bulkhead plating (remainder)	30. Deck transverse (centre tank)
1. Stringer plate	11. Sheer strake longitudinals	21. Longitudinal bulkhead longitudinals	31. Deck transverse (wing tank)
2. Sheer strake	12. Side shell longitudinals	22. Inner side plating	32. Vertical web in wing ballast tank
3. Side shell plating	13. Bilge longitudinals	23. Inner side longitudinals	33. Double bottom floor – wing tank
4. Bilge plating	14. Bottom longitudinals	24. Hopper plating	34. Double bottom floor – centre tank
5. Bottom shell plating	15. Deck girders	25. Hopper longitudinals	35. Longitudinal bulkhead vertical web
6. Keel plate	16. Horizontal girders in wing ballast tanks	26. Inner bottom plating	36. Cross ties
	17. Bottom girders	27. Inner bottom longitudinals	
	18. Longitudinal bulkhead top strake	28. Topside tank plating	
	19. Longitudinal bulkhead bottom strake	29. Topside tank longitudinals	

Sheet 14

Thickness Measurement – Double Hull Oil Tankers

Areas subject to close-up survey and thickness measurements - Thickness to be reported on TM3-DHT, TM4-DHT and TM5-DHT as appropriate

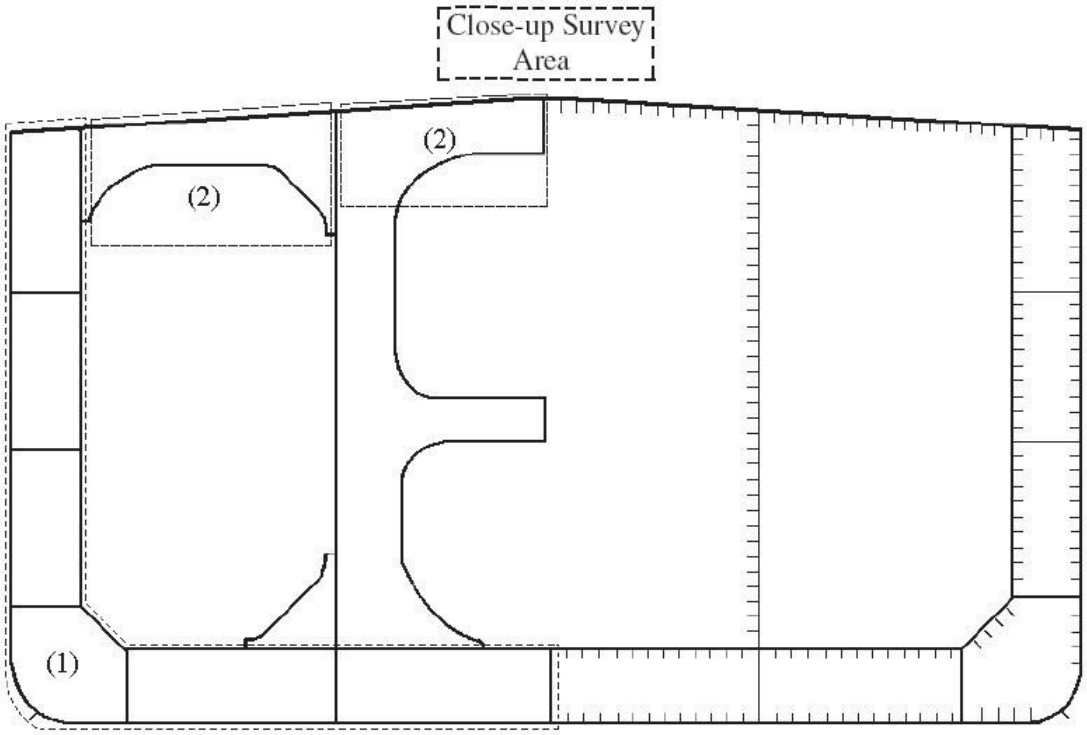

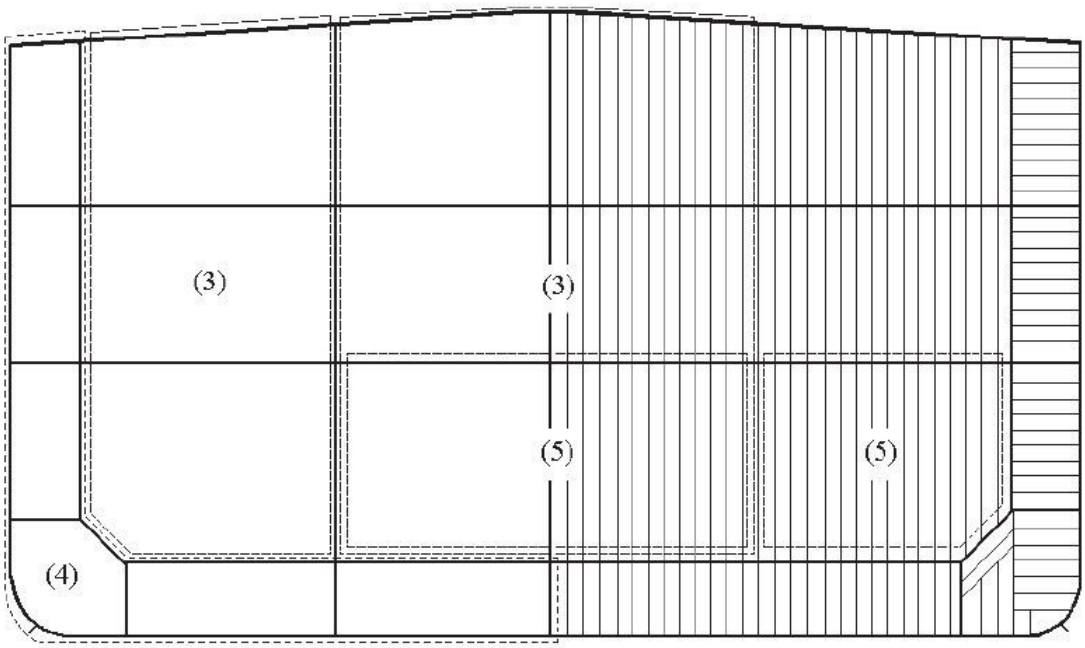

Sheet 15

Thickness Measurement – Double Hull Oil Tankers

Areas subject to close-up survey and thickness measurements - Thickness to be reported on TM3-DHT and TM4-DHT as appropriate

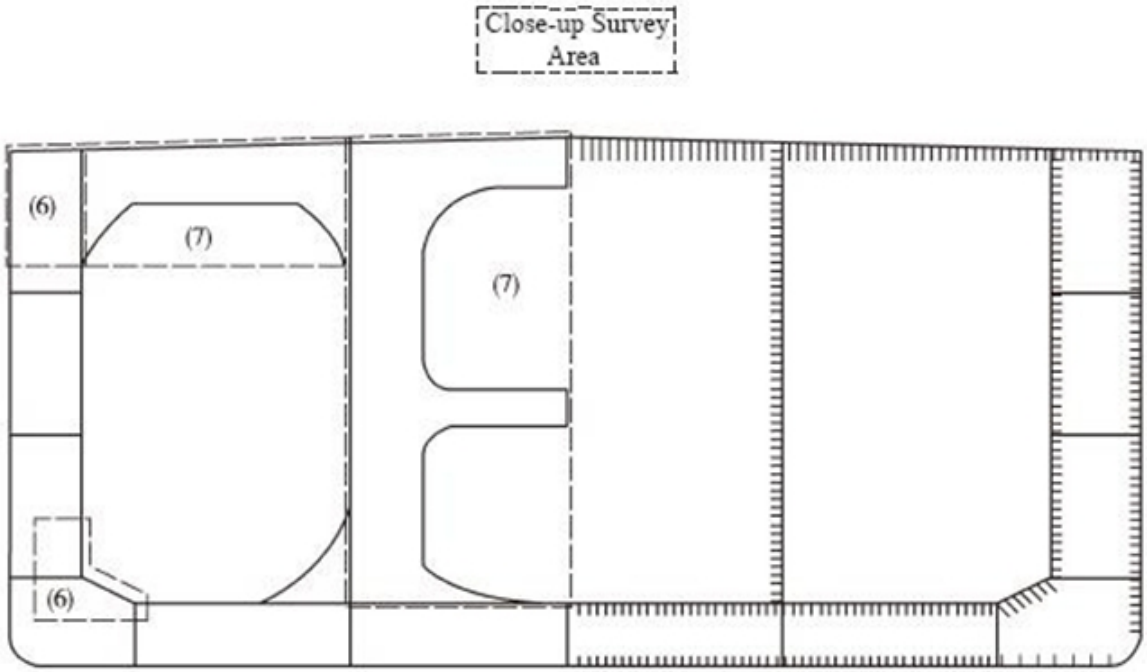

E. Recommended Procedures for Thickness Measurements of Double Skin Bulk Carriers

Notes:

1. This document is to be used for recording thickness measurements as required by Section 4-I.E.

2. Reporting forms TM1-DSBC, TM2-DSBC, TM3-DSBC, TM4-DSBC, TM5-DSBC and TM6-DSBC (Sheets 4 to 10) are to be used for recording thickness measurements and the maximum allowable diminution should be stated.

The maximum allowable diminution could be stated in an attached document.

3. The remaining Sheets 11 to 14 are guidance diagrams and notes relating to the reporting forms and the procedure for the thickness measurements as required by IACS Unified Requirement.

GENERAL PARTICULARS

Ship's name:
IMO number:
Class identity number:
Port of registry:
Gross tons:
Deadweight:
Date of build:
Classification society:

Name of Company performing thickness measurement:
Thickness measurement company certified by:
Certificate No:
Certificate valid from.....to.....
Place of measurement:
First date of measurement:
Last date of measurement:

Renewal survey/intermediate survey due:[1)]
Details of measurement equipment:
Qualification of operators:

Report number:	consisting of	Sheets

Name of operator:	Name of surveyor:
Signature of operator:	Signature of surveyor:
Company official stamp:	Classification society official stamp:

* Delete as appropriate.

Sheet 4
TM1-DSBC

Report on Thickness Measurement of All Deck Plating, All Bottom Shell Plating or Side Shell Plating*
(*delete as appropriate)

Ship's name..... Class identity No. ..... Report No. .....

STRAKE POSITION																	
PLATE POSITION	**No. or Letter**	**Org. Thk. mm**	**Forward Reading**						**Aft Reading**						**Mean Diminution %**		**Maximum Allowable Diminution**
			Gauged		**Diminution *P***		**Diminution *S***		**Gauged**		**Diminution *P***		**Diminution *S***				
			P	***S***	**mm**	**%**	**mm**	**%**	***P***	***S***	**mm**	**%**	**mm**	**%**	***P***	***S***	**mm**
12th forward																	
11th																	
10th																	
9th																	
8th																	
7th																	
6th																	
5th																	
4th																	
3rd																	
2nd																	
1st																	
Amidships																	
1st aft																	
2nd																	
3rd																	
4th																	
5th																	
6th																	
7th																	
8th																	
9th																	
10th																	
11th																	
12th																	

Operators signature: .....

Notes:

1. *This report is to be used for recording the thickness measurement of:*

   A— *All strength deck plating within the cargo area.*
   B— *All keel, bottom shell plating and bilge plating within the cargo area.*
   C— *Side shell plating including selected wind and water strakes outside cargo length area.*
   D— *All wind and water strakes within cargo area.*

2. *The strake position is to be clearly indicated as follows:*

   1. *For strength deck indicate the number of the strake of plating inboard from the stringer plate.*
   2. *For bottom plating indicate the number of the strake of plating outboard from the keel plate.*
   3. *For side shell plating give number of the strake of plating below sheer strake and letter as shown on shell expansion.*

3. *Only the deck plating strakes outside line of openings are to be recorded.*

4. *Measurements are to be taken at the forward and aft areas of all plates and where plates cross ballast/cargo tank boundaries separate measurements for the area of plating in way of each type of tank are to be recorded.*

5. *The single measurements recorded are to represent the average of multiple measurements.*

6. *The maximum allowable diminution could be stated in an attached document.*

Sheet 5
TM2-DSBC(i)

Report on Thickness Measurement of Shell and Deck Plating (one, two or three transverse sections)

Ship's name..... Class identity No. ..... Report No. .....

STRENGTH DECK AND SHEERSTRAKE PLATING																											
	FIRST TRANSVERSE SECTION AT FRAME NUMBER									SECOND TRANSVERSE SECTION AT FRAME NUMBER									THIRD TRANSVERSE SECTION AT FRAME NUMBER								
STRAKE POSITION	**No. or Letter**	**Org. Thk.**	**Max. Alwb. Dim.**	**Gauged**		**Diminution P**		**Diminution S**		**No. or Letter**	**Org. Thk.**	**Max. Alwb. Dim.**	**Gauged**		**Diminution P**		**Diminution S**		**No. or Letter**	**Org. Thk.**	**Max. Alwb. Dim.**	**Gauged**		**Diminution P**		**Diminution S**	
		mm	**mm**	**P**	**S**	**mm**	**%**	**mm**	**%**		**mm**	**mm**	**P**	**S**	**mm**	**%**	**mm**	**%**		**mm**	**mm**	**P**	**S**	**mm**	**%**	**mm**	**%**
Stringer plate																											
1st strake inboard																											
2nd																											
3rd																											
4th																											
5th																											
6th																											
7th																											
8th																											
9th																											
10th																											
11th																											
12th																											
13th																											
14th																											
Centre strake																											
Sheer strake																											
TOPSIDE TOTAL																											

Operators signature: .....

Notes:

1. *This report is to be used for recording the thickness measurement of:*

   Strength deck plating and sheer strake plating transverse sections:

   One, two or three sections within the cargo length area, comprising the structural items (0), (1) and (2) as shown on the diagrams of typical transverse sections

illustrated on Sheets 11, 12 and 13 of this document.

2. *Only the deck plating strakes outside line of hatch openings are to be recorded.*
3. *The top side area comprises deck plating, stringer plate and sheer strake (including rounded gunwales).*
4. *The exact frame station of measurement is to be stated.*
5. *The single measurements recorded are to represent the average of multiple measurements.*
6. *The maximum allowable diminution could be stated in an attached document.*

Sheet 6
TM2-DSBC(ii)

Report on Thickness Measurement of Shell Plating (one, two or three transverse sections)

Ship's name..... Class identity No. ..... Report No. .....

SHELL PLATING																								
	FIRST TRANSVERSE SECTION AT FRAME NUMBER								SECOND TRANSVERSE SECTION AT FRAME NUMBER								THIRD TRANSVERSE SECTION AT FRAME NUMBER							
STRAKE POSITION	No. or Letter	As Built Thk. mm	Vol. Thk. Add. mm	Ren. Thk. mm (a)	Gauged Thk. mm (b)		Remaining Corr. Addition, mm (b)-(a)		No. or Letter	As Built Thk. mm	Vol. Thk. Add. mm	Ren. Thk. mm (a)	Gauged Thk. mm (b)		Remaining Corr. Addition, mm (b)-(a)		No. or Letter	As Built Thk. mm	Vol. Thk. Add. mm	Ren. Thk. mm (a)	Gauged Thk. mm (b)		Remaining Corr. Addition, mm (b)-(a)	
					P	S	P	S					P	S	P	S					P	S	P	S
1st below sheer strake																								
2nd																								
3rd																								
4th																								
5th																								
6th																								
7th																								
8th																								
9th																								
10th																								
11th																								
12th																								
13th																								
14th																								
15th																								
16th																								
17th																								
18th																								
19th																								
20th																								
Keel strake																								
BOTTOM TOTAL																								

Operators signature: .....

Notes:

1. *This report is to be used for recording the thickness measurement of:*

   Shell plating at transverse sections:

One, two or three sections within the cargo length area, comprising the structural items (3), (4), (5) and (6) as shown on the diagrams of typical transverse sections illustrated on Sheets 11, 12 and 13 of this document.

2. *The bottom area comprises keel, bottom and bilge plating.*
3. *The exact frame station of measurement is to be stated.*
4. *The single measurements recorded are to represent the average of multiple measurements.*
5. *The maximum allowable diminution could be stated in an attached document.*

Sheet 7
TM3-DSBC

Report on Thickness Measurement of Longitudinal Members at Transverse Sections (one, two or three transverse sections)

Ship's name…….. Class identity No. …….. Report No. ……..

STRUCTURAL MEMBER	FIRST TRANSVERSE SECTION AT FRAME NUMBER									SECOND TRANSVERSE SECTION AT FRAME NUMBER									THIRD TRANSVERSE SECTION AT FRAME NUMBER								
	Item No.	Org. Thk.	Max. Alwb. Dim.	Gauged		Diminution P		Diminution S		Item No.	Org. Thk.	Max. Alwb. Dim.	Gauged		Diminution P		Diminution S		Item No.	Org. Thk.	Max. Alwb. Dim.	Gauged		Diminution P		Diminution S	
		mm	mm	P	S	mm	%	mm	%		mm	mm	P	S	mm	%	mm	%		mm	mm	P	S	mm	%	mm	%

Operators signature: ……

Notes:

1. *This report is to be used for recording the thickness measurements of:*

   Longitudinal members at transverse sections:

   One, two or three sections within the cargo length area comprising the appropriate structural items (10) to (25) as shown on diagrams of typical transverse sections illustrated on Sheets 11, 12 and 13 of this document.

2. *The exact frame station of measurement is to be stated.*

3. *The single measurements recorded are to represent the average of multiple measurements.*

4. *The maximum allowable diminution could be stated in an attached document.*

Sheet 8
TM4-DSBC

Report on Thickness Measurement of Transverse Structural Members
In the double bottom, hopper side and topside water ballast tanks

Ship's name..... Class identity No. ..... Report No. .....

TANK DESCRIPTION:									
LOCATION OF STRUCTURE:									
STRUCTURAL MEMBER	**ITEM**	**Original Thickness mm**	**Max. Alwb. Dim. mm**	**Gauged**		**Diminution P**		**Diminution S**	
				P	**S**	**mm**	**%**	**mm**	**%**

Operators signature: .....

Notes:

1. *This report is to be used for recording the thickness measurements of:*

   Transverse structural members, comprising the appropriate structural items (30) to (34) as shown on diagrams of typical transverse sections illustrated on Sheets 11, 12 and 13 of this document.

2. *Guidance for areas of measurement is indicated on Sheets 14 of this document.*

3. *The single measurements recorded are to represent the average of multiple measurements.*

4. *The maximum allowable diminution could be stated in an attached document.*

Sheet 9

TM5-DSBC Report on Thickness of Watertight Transverse Bulkheads in Cargo Holds

Ship's name..... Class identity No. ..... Report No. .....

LOCATION OF STRUCTURE:							**FRAME NO.:**	
STRUCTURAL COMPONENT (PLATING/STIFFENER)								
	Original Thickness mm	**Max. Alwb. Dim. mm**	**Gauged**		**Diminution P**		**Diminution S**	
			Port	**Starboard**	**mm**	**%**	**mm**	**%**

Operators signature: .....

Notes:

1. *This report form is to be used for recording the thickness measurement of:*
2. *W.T. transverse bulkheads in cargo holds.*
3. *Guidance for areas of measurements is indicated on Sheet 14 of this document.*
4. *The single measurements recorded are to represent the average of multiple measurements.*
5. *The maximum allowable diminution could be stated in an attached document.*

Sheet 10
TM6-DSBC **Report on Thickness measurement of Miscellaneous Structural Members**

Ship's name..... Class identity No. ..... Report No. .....

STRUCTURAL MEMBER:									**SKETCH**
LOCATION OF STRUCTURE:									
Description	**Org. Thk. mm**	**Max. Alwb. Dim. mm**	**Gauged**		**Diminution P**		**Diminution S**		
			P	**S**	**mm**	**%**	**mm**	**%**	

Operators signature: .....

Notes:

1. *This report is to be used for recording the thickness measurement of:*

   Miscellaneous structural members including the structural items (40), (41) and (42) as shown on diagrams of typical transverse sections illustrated on Sheets 11, 12 and 13 of this document.

2. *Guidance for areas of measurement is indicated on Sheet 14 of this document.*

3. *The single measurements recorded are to represent the average of multiple measurements.*

4. *The maximum allowable diminution could be stated in an attached document.*

Sheet 11

Thickness Measurement – Double Skin Bulk Carriers

Typical Transverse Section of a Double Skin Bulk Carrier with Indication of Longitudinal and Transverse Members

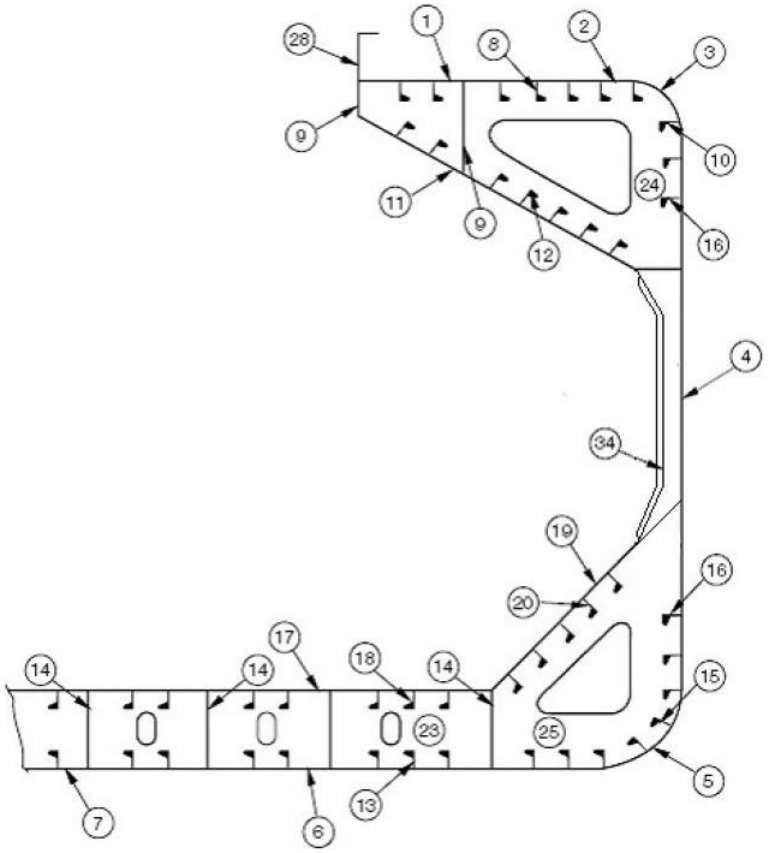

Report on TM2-DSBC(i) & (ii)	18. Inner bottom longitudinals
1. Strength deck plating	19. Hopper plating
2. Stringer plate	20. Hopper longitudinals
3. Sheer strake	31. Inner side plating
4. Side shell plating	– Inner side longitudinals, if any
5. Bilge plating	– Horizontal girders in wing ballast tanks
6. Bottom shell plating	
7. Keel plate	
	Report on TM4-DSBC
	23. Double bottom tank floors
Report on TM3-DSBC	25. Hopper side tank transverses
8. Deck longitudinals	34. Transverse web frame
9. Deck girders	– Topside tank transverses
10. Sheer strake longitudinals	
11. Topside tank sloping plating	
12. Topside tank sloping plating longitudinals	**Report on TM6-DSBC**
13. Bottom longitudinals	28. Hatch coamings
14. Bottom girders	– Deck plating between hatches
15. Bilge longitudinals	– Hatch covers
16. Side shell longitudinals, if any	
17. Inner bottom plating	

Sheet 12

Thickness Measurement – Double Skin Bulk Carriers

Typical Transverse Section of an Ore Carrier with Indication of Longitudinal and Transverse Members

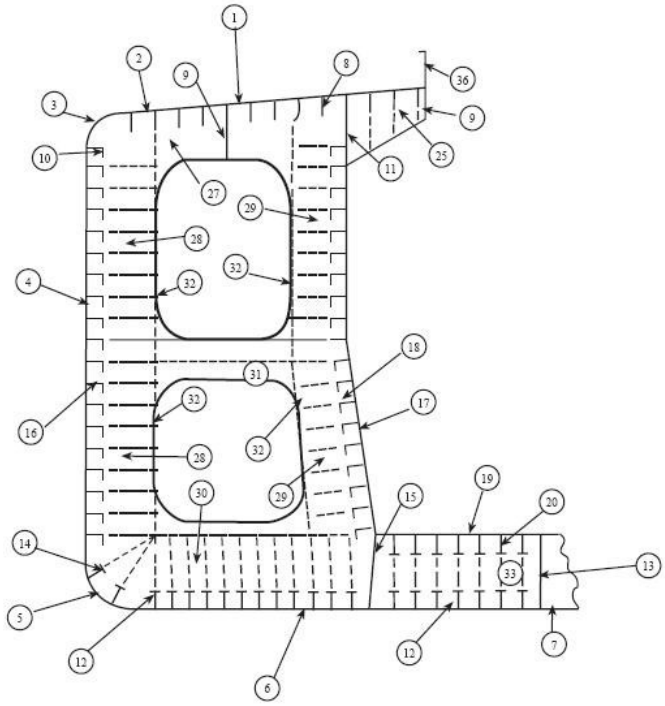

Report on TM2-DSBC(i) & (ii)	Report on TM4-DSBC
1. Strength deck plating 2. Stringer plate 3. Sheer strake 4. Side shell plating 5. Bilge plating 6. Bottom shell plating 7. Keel plate	25. Deck transverse (centre tank) 26. Bottom transverse (centre tank) 27. Deck transverse (wing tank) 28. Side shell vertical web 29. Longitudinal bulkhead vertical web 30. Bottom transverse (wing tank) 31. Struts 32. Transverse web face plate 33. D.B. floors 34. 35
Report on TM3-DSBC	**Report on TM6-DSBC**
8. Deck longitudinals 9. Deck girders 10. Sheer strake longitudinals 11. Longitudinal bulkhead top strake 12. Bottom longitudinals 13. Bottom girders 14. Bilge longitudinals 15. Longitudinal bulkhead lower strake 16. Side shell longitudinals 17. Longitudinal bulkhead plating (remainder) 18. Longitudinal bulkhead longitudinals 19. Inner bottom plating 20. Inner bottom longitudinals 21. 22 23 24	36. Hatch coamings 37. Deck plating between hatches 38. Hatch covers 39. 40

Sheet 13

Thickness Measurement – Double Skin Bulk Carriers

Transverse section outline: The diagram may be used for those ships where the diagrams on Sheets 11 and 12 are not suitable.

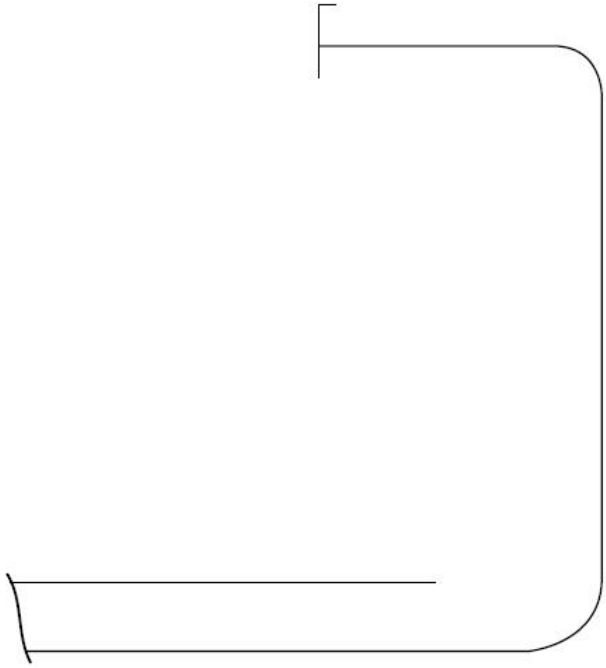

Report on TM2-DSBC(i) & (ii)	17. Inner bottom plating
1. Strength deck plating	18. Inner bottom longitudinals
2. Stringer plate	19. Hopper plating
3. Sheer strake	20. Hopper longitudinals
4. Side shell plating	31. Inner side plating
5. Bilge plating	– Inner side longitudinals, if any
6. Bottom shell plating	– Horizontal girders in wing ballast tanks
7. Keel plate	
	Report on TM4-DSBC
	23. Double bottom tank floors
	25. Hopper side tank transverses
Report on TM3-DSBC	34. Transverse web frame
8. Deck longitudinals	– Topside tank transverses
9. Deck girders	
10. Sheer strake longitudinals	
11. Topside tank sloping plating	**Report on TM6-DSBC**
12. Topside tank sloping plating longitudinals	28. Hatch coamings
13. Bottom longitudinals	– Deck plating between hatches
14. Bottom girders	– Hatch covers
15. Bilge longitudinals	
16. Side shell longitudinals, if any	

Sheet 14

Thickness Measurement – Ore Carriers

Areas Subject to Close up Survey and Thickness Measurements - Thickness to be Reported on TM3-DSBC, TM4-DSBC, TM5-DSBC and TM6-DSBC as appropriate

Typical transverse section close-up survey

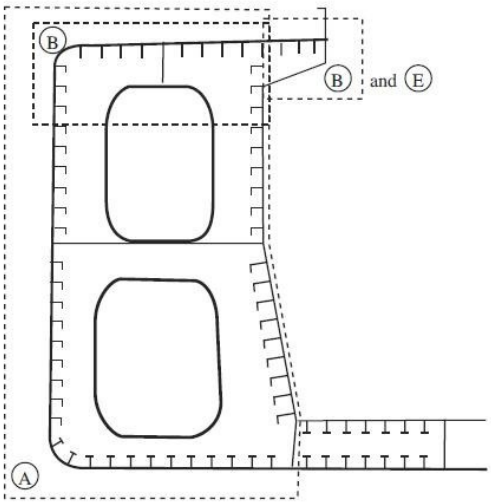

Thickness to be reported on
TM3-DSBC and TM4-DSBC as appropriate

Close-up survey
area

Typical transverse bulkhead

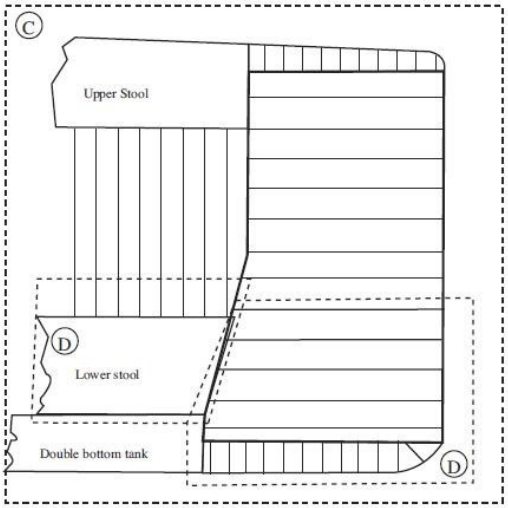

Thickness to be reported on TM5-DSBC