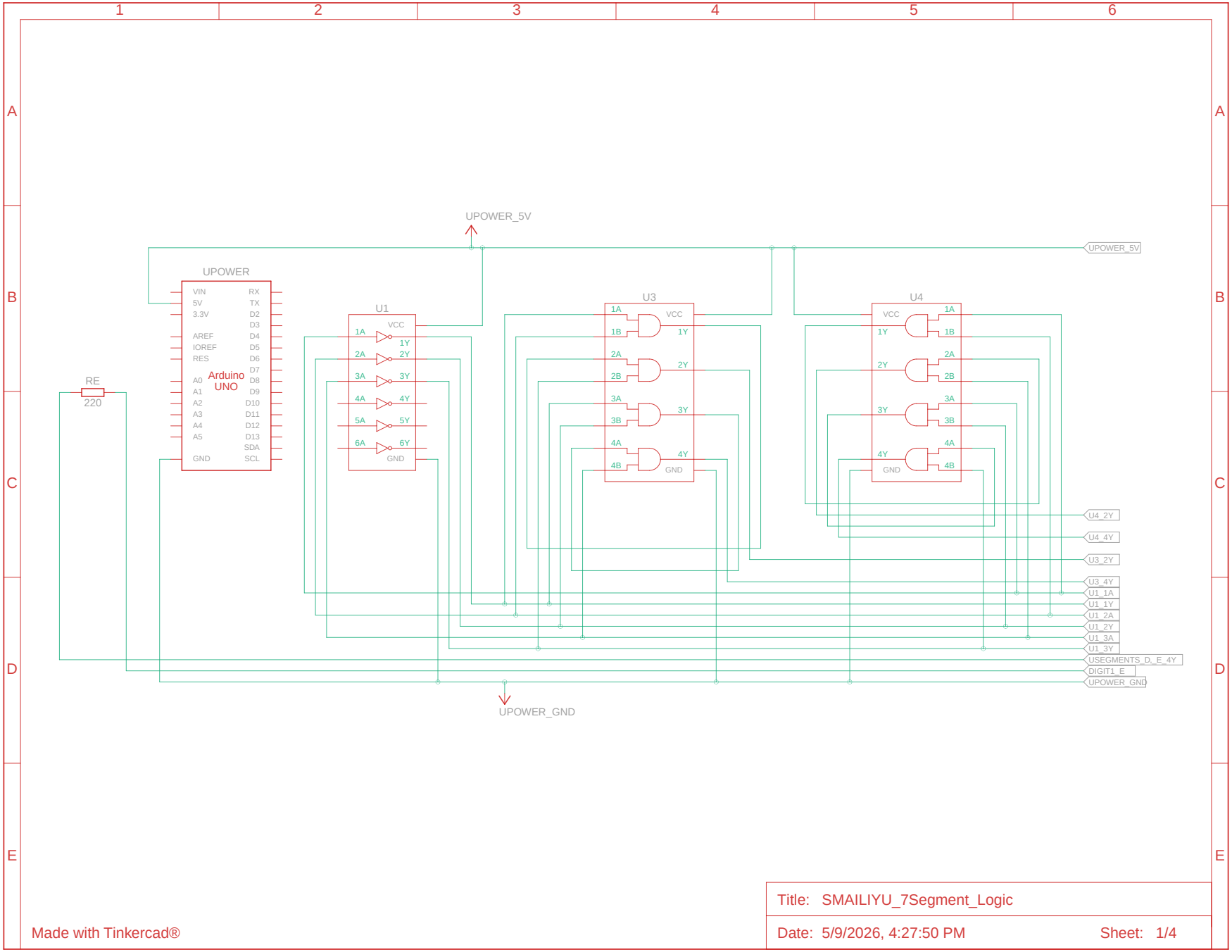

Made with Tinkercad®

Title: SMAILIYU_7Segment_Logic

Date: 5/9/2026, 4:27:50 PM

Sheet: 1/4

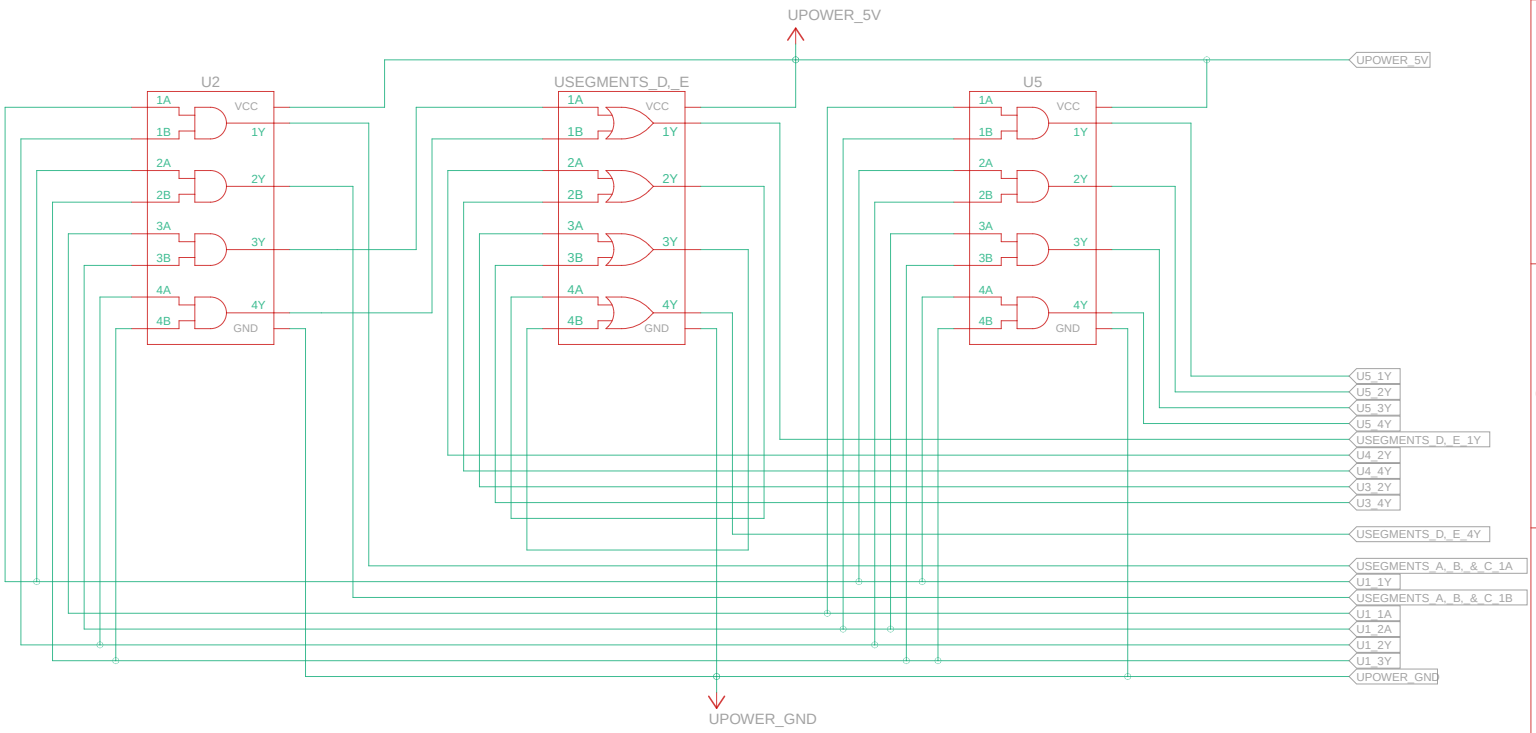

Made with Tinkercad®

Title: SMAILIYU_7Segment_Logic

Date: 5/9/2026, 4:27:50 PM

Sheet: 2/4

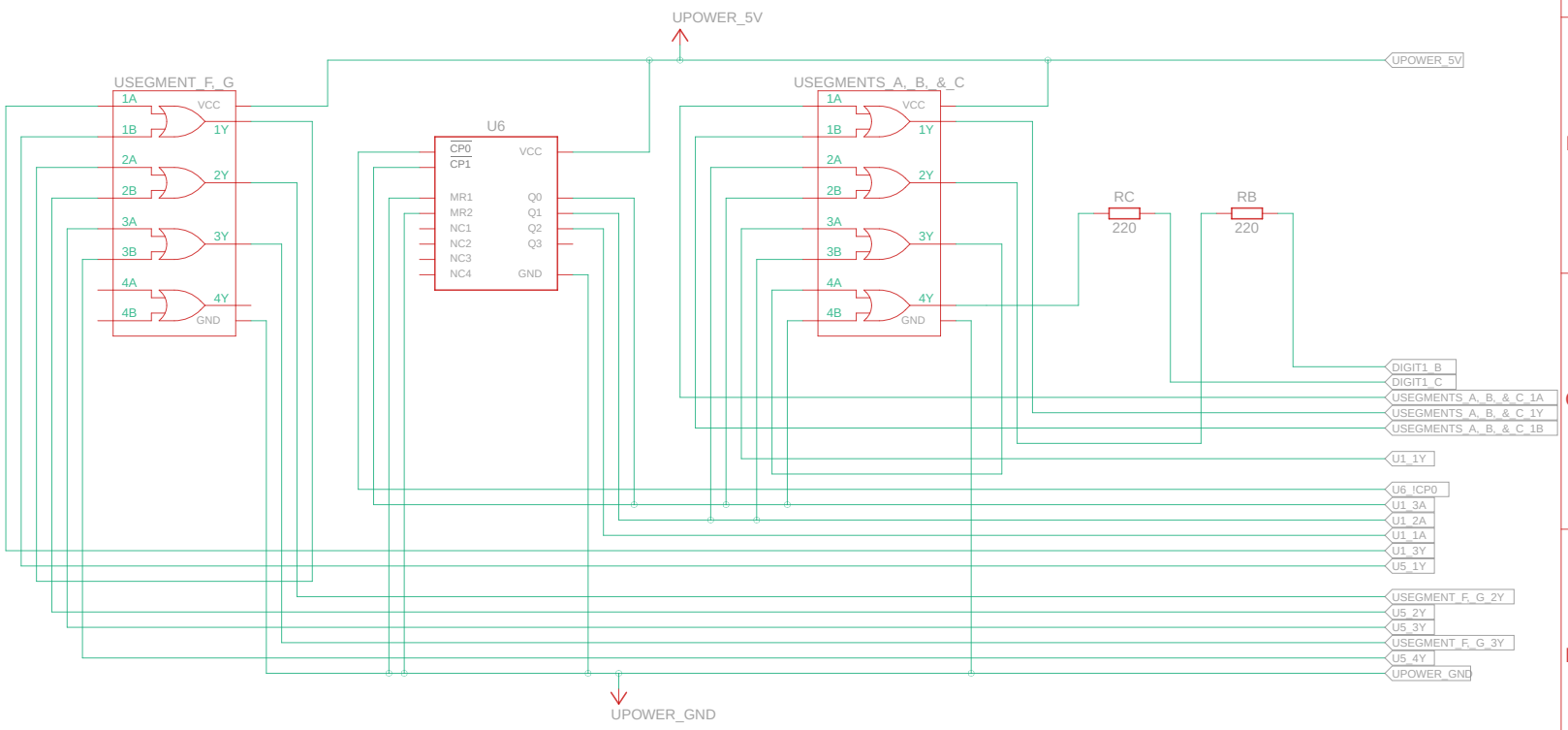

Made with Tinkercad®

Title: SMAILIYU_7Segment_Logic

Date: 5/9/2026, 4:27:50 PM

Sheet: 3/4

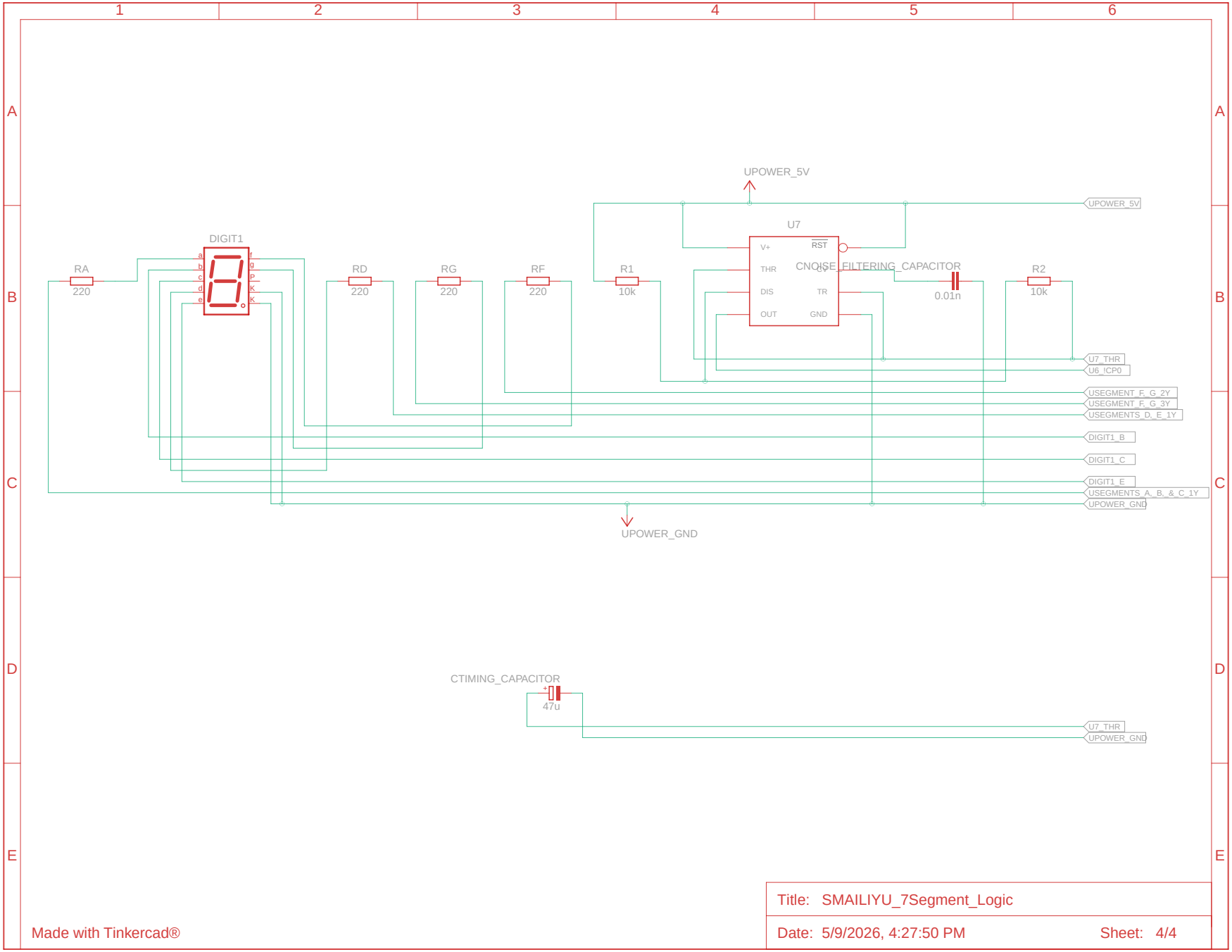

Made with Tinkercad®

Title: SMAILIYU_7Segment_Logic

Date: 5/9/2026, 4:27:50 PM

Sheet: 4/4