BLANK SIZE	STAGE NO	USED ON

DWG NO

M

B.W

H.T

S.G

P.G

JIG

W-EDM

EDM

S.G

LOC J

DIST

THIS INFORMATION IS CONFIDENTIAL AND PROPRIETARY TO TYCO ELECTRONICS CORPORATION AND ITS WORLDWIDE SUBSIDIARIES AND AFFILIATES. IT MAY NOT BE DISCLOSED TO ANYONE, OTHER THAN TYCO ELECTRONICS PERSONNEL, WITHOUT WRITTEN AUTHORIZATION FROM TYCO ELECTRONICS CORPORATION, HARRISBURG, PENNSYLVANIA USA.

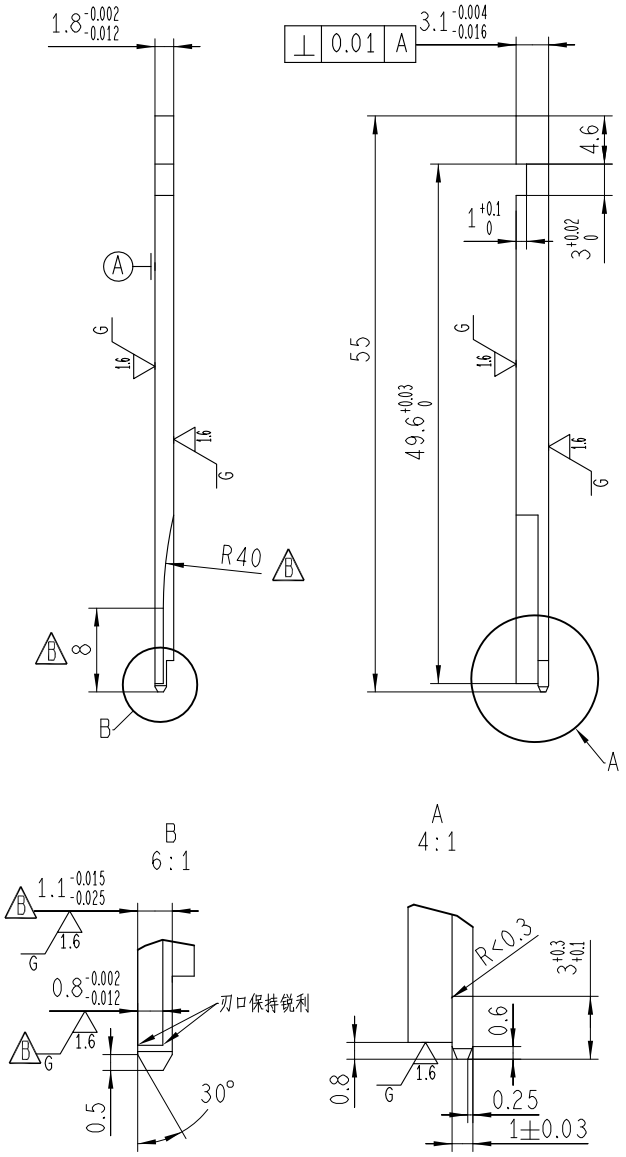

技术要求

1、锐角倒钝，去除毛刺。
2、淬火处理HRC58-62。

8	16	32	63	125	250	500	1000
0.8S	1.5S	3.2S	6.3S	12.5S	25S	50S	100S

REQ'D 1 PC

P	LTR	REVISION RECORD	DATE	DWN	APVD

THIS DRAWING IS A CONTROLLED DOCUMENT.

DWN	CHK	APVD
Zhang zewen TDA	Guan xiaohu	Feng Jinwei

DIMENSIONS: MM

MATERIAL: SKH-9

HT TR: HRC58-62

TOLERANCES UNLESS

0 PLC	±0.1
1 PLC	±0.02
2 PLC	±0.01
3 PLC	±0.005
4 PLC	±0.002
ANGLES	± -

SURFACE TEXTURE XX

TE Connectivity

NAME: PDL stitching machine

SCALE	SIZE	DRAWING NO	SHEET	REV
1:1	A4	51-1048963-00178	1 OF 1	A