**A**

**Project Report**

**On**

# "WOMEN'S SAFETY PANIC BUTTON"

Submitted in partial fulfillment of the requirements for the

**Diploma**

**In**

**Electronics and telecommunications Engineering**

**By**


**Miss. Apurva Sanjay Duduskar** (Enrollment no.2216170149)

**Miss. Bhargavi Ramchandra Kulkarni (**Enrollment no.2216170154)

**Miss. Sanika Dattatray Nikam** (Enrollment no.2216170160)

**Miss. Vaishnavi Uttam Sawant** (Enrollment no.23213340442)

**Miss. Sanika Ashok Pawar** (Enrollment no.23213340439)

Under the supervision of

**Ms. Prabhune A.D.**

**Department of Electronics & Telecommunication Engineering**

**Arvind Gavali College of Engineering, Satara**


**2024-25**

**Arvind Gavali College of Engineering, Satara**
**Department of Electronics & Telecommunication Engineering**

---

# CERTIFICATE

The Project report entitled **"WOMEN'S SAFETY PANIC BUTTON"**
submitted by

1) Miss. Apurva Sanjay Duduskar (Enrollment no 2216170149)
2) Miss. Bhargavi Ramchandra Kulkarni **(**Enrollment no.2116170154)
3) Miss. Sanika Dattatray Nikam (Enrollment no.2016170160)
4) Miss. Vaishnavi Uttam Sawant (Enrollment no.23213340442)
5) Miss. Sanika Ashok Pawar (Enrollment no.23213340439)

Is approved for the **Diploma in Electronics & Telecommunication Engineering from Maharashtra State Board of Technical Education, Mumbai.**

Date: Place:

**Ms. Prabhune A.D.**
(Guide)

**Ms. Sayyad A.A.**
( Project Coordinator )

**Ms. Sayyad A.A.**
( Head of Department )

( External Examiner )

**Dr. Mulik S.S.**
( Principal )

# DECLARATION

I declare that this report reflects my thoughts about the subject in my own words. I have sufficiently and referenced the original sources, referred or considered in this work. I have not misrepresented or fabricated or falsified any idea/data/fact/source in this my submission. I understand that any violation of the above will be cause for disciplinary action by the Institute.

| Student's Name | Signature |
|---|---|
| **Miss. Apurva Sanjay Duduskar**<br>(Enrollment no.2216170149) | |
| **Miss. Bhargavi Ramchandra Kulkarni**<br>**(**Enrollment no.2116170106) | |
| **Miss. Sanika Dattatray Nikam**<br>(Enrollment no.2016170011) | |
| **Miss. Vaishnavi Uttam Sawant**<br>(Enrollment no.2016170005) | |
| **Miss. Sanika Ashok Pawar**<br>(Enrollment no.2016170003) | |

Date-

Place-

# ACKNOWLEDGEMENT

I must mention several individuals and organizations that were of enormous help in the Development of this work **Ms. Prabhune A**.D.my supervisors, personalities with a Midas Touch encouraged me to carry this work. Their continuous invaluable knowledgably guidance Throughout the course of this study helped me to complete the work up to this stage and hope Will continue in further research.

I am also very thankful to **Ms. Prabhune A.D.** for their valuable suggestions, critical Examination of work during the progress, I am indebted to them.

I am very grateful to **Arvind Gavali College of Engineering, Satara** for their positive Cooperation and immense kindly help during the period of work with them.

In addition, very energetic and competitive atmosphere of the **Electronics & Telecommunication Engineering Department** had much to do with this work.

I acknowledge With thanks to faculty, teaching and non-teaching staff of the department, Central library and Colleagues.

I sincerely thank to **Dr. Mulik S.S.** for supporting me to do this work and I am very much Obliged to them.

1) Miss. Apurva Sanjay Duduskar
2) Miss. Bhargavi Ramchandra Kulkarni
3) Miss. Sanika Dattatray Nikam
4) Miss. Vaishnavi Uttam Sawant
5) Miss. Sanika Ashok Pawar

Place: AGCE, Satara.

# ABSTRACT

This project presents a low-cost, portable SOS alert system using Arduino**,** GPS Neo-6**,** and SIM800 GSM module. The system is designed to send an emergency SMS with the user's live location when an SOS button is pressed for more than 3 seconds**.** The Arduino controls all modules and reads location data from the GPS module. It then sends the location as a message through the GSM module to a predefined mobile number. This solution is useful in emergency situations for personal safety and can be used by elderly people, children, and travelers this is specifically women safety. The system works independently without internet, making it suitable for use in remote areas.

# CONTENTS


| | |
|---|---|
| PROJECT COMPLETION CERTIFICATE | ii |
| DECLARATION | iii |
| AKNOWLEGDMENT | iv |
| ABSTRACT | v |
| CONTENTS | vi |
| LIST OF FIGURES | viii |
| LIST OF TABLES | ix |
| ABBREVIATIONS | x |
| NOMENCLATURE | xiii |
| **CHAPTER 1- INTRODUCTION** | 1 |
| 1.1 Aim of the project | 2 |
| 1.2 Brief Description of project | 2 |
| 1.3 Block diagram | 4 |
| 1.4 Block diagram description | 5 |
| 1.5 Advantages of the project | 6 |
| 1.6 Disadvantages of the project | 6 |
| 1.7 Applications of the project | 6 |
| **CHAPTER 2- LITERATURE SURVEY** | **7** |
| 2.1 Litrature Review | 8 |
| **CHAPTER 3- SOFTWARE DESIGN** | 9 |
| 3.1 Flow chart | 10 |
| 3.2 Software Requirement | 11 |
| 3.3 Circuit Diagram | 15 |
| 3.4 IoT | 17 |
| **CHAPTER 4 – HARDWARE REQUIREMENTS** | **18** |
| 4.1 Components of Circuit | 19 |
| 4.2 GSM800LModule | 19 |
| 4.2.1Pin Configuration of GSM Module | 20 |
| 4.3 SOS Button | 22 |

4.2.1 Pin Description of SOS Button 23
4.3 Arduino 24
4.4.1Technical Specification 25
4.4.2 Pin Function 25
4.5 GPS Neo 6M Module 26
4.5.2.1Pin Description 28

**CHAPTER 5 - APPLICATION & LIMITATIONS 30**
5.1 Application 31
5.2 Limitations 31
5.3 Future scope 31

**CHAPTER 6 – RESULTS & DISCUSSION 32**
6.1 Results & Discussion 33

**CHAPTER 7 – CONCLUSION 34**

**CHAPTER 8 – REFERENCE 36**

# LIST OF FIGURES


| | | |
|---|---|---|
| 1.3.1 | Block Diagram | 4 |
| 3.1.1 | Flow Chart | 10 |
| 3.2.1 | Circuit Diagram | 15 |
| 4.2.1 | GSM800L Module | 19 |
| 4.2.2 | Pin Configuration | 21 |
| 4.3.1 | SOS Button | 22 |
| 4.3.2 | Pin Configuration | 23 |
| 4.4.1 | Arduino | 24 |
| 6.1.1 | Result | 33 |

# LIST OF TABLES

4.3.3 Pin Discription 19
4.4.2 Pin Configuration 20
4.5.1 Technical Specifications 22
4.6.1 Technical Specifications 24
4.7.2 Technical Specifications 25

# ABBREVIATIONS

| Stands for | Ancronym |
|---|---|
| Global Positioning System | GPS |
| Global System for Mobile Communication | GSM |
| Short Message Service | SMS |
| Internet of Things | IoT |
| Ground | GND |
| Transmit | Tx |
| Receive | Rx |
| Message Queuing Telemetry Transport | MQTT |
| Female Header Pin | FHP |
| General Purpose Input Output | GPIO |
| Power Supply Unit | PSU |
| Light Emitting Diode | LED |
| Operating System | OS |
| Lithium Polymer Battery | Li-Po |
| micro-controller | MCU |

| Stands for | Acronym |
|---|---|
| Global Positioning System | GPS |
| Global System for Mobile Communication | GSM |
| Short Message Service | SMS |
| Save Our Souls (Emergency Signal) | SOS |
| Light Emitting Diode | LED |
| Microcontroller Unit | MCU |
| Kilo Bytes | KB |
| Electrically Erasable Programmable Read-Only Memory | EEPROM |
| Universal Asynchronous Receiver Transmitter | UART |
| Universal Synchronous/Asynchronous Receiver/Transmitter | USART |
| Voltage Common Collector | VCC |
| Voltage Common Collector | VCC |
| Ground | GND |
| Universal Serial Bus | USB |
| Input / Output | I/O |
| Voltage | V |
| Input/Output Reference | IOREF |

| Stands for | Acronym |
|---|---|
| Subscriber Identity Module | SIM |
| Liquid Crystal Display | LCD |
| International Research Journal of Engineering and Technology | IRJET |
| International Journal of Embedded System and Application | IJESA |

# NOMENCLATURE

| Symbol | Discription |
|---|---|
| V | Voltage |
| A | Ampere |
| GPS | Global Positioning System |
| GSM | Global System for Mobile communication |
| SMS | Short Message Service |
| SOS | Emergency Signal |

# CHAPTER 1
# INTRODUCTION

## 1.1 Aim of the project

The main aim of Women's safety is a critical concern in today's society. There is a need for a device that can ensure real-time tracking and emergency alerting to enhance security. The main aim of this project is to design a Women's Safety Device that can detect emergency situations and instantly alert predefined contacts with location details, ensuring quick assistance and protection.

## 1.2 Brief discription of the project

This project aims to create a compact, portable, and reliable Women's safety panic button using Arduino Uno, SIM800L GSM Module, and NEO-6M GPS Module to provide real-time location tracking and emergency alert messaging**.** The system gets activated when the SOS button is pressed for more than 3 seconds, automatically sending an emergency SMS with the live location to a predefined contact. The use of IoT in safety applications is a significant technological advancement. The device continuously monitors the user's location and transmits emergency alerts via the GSM module. In an unsafe situation, quick response time is crucial, and this system ensures that help reaches the user as soon as possible. IoT plays a crucial role in personal safety by enabling real-time data transmission and automated emergency response systems. Traditional safety methods, such as phone calls, may not always be feasible in an emergency, whereas an automated alert system provides an instant response. With advancements in wireless communication and sensor networks, smart safety solutions have become more effective and accessible. The Internet of Things (IoT) enhances security by enabling devices to communicate and function intelligently. This project utilizes IoT by integrating GSM and GPS modules to track the real-time location of the user and send alerts to their contacts. The emergency alert system ensures that the person in danger can be located and assisted without delay. This project can be further enhanced by integrating additional features lik**e** fall detection using accelerometers**,** buzzer alarms to attract nearby attention**,** and mobile app integration for a more user-friendly interface. The ultimate goal is to develop a low-cost, efficient, and reliable personal safety devic**e** for women, students, and individuals who may find themselves in unsafe situations. The Women's Safety Device can be used in various scenarios, such as traveling alone, late-night work shifts, or unsafe environments. The device is compact and easy to carry, making it a practical solution for daily use. This project demonstrates how IoT and embedded systems can be utilized to enhance personal security and safety This project also aims to raise awareness about the importance of women's safety in everyday life and the role technology can play in addressing this issue. By offering a portable and efficient solution, this device can empower individuals, especially women, by providing them with a reliable means of seeking help when they need it the most. In addition to its emergency alert system, the device could serve as an educational tool to encourage the adoption of more advanced safety technologies across various groups, such as students and working professionals. Through the use of affordable components, this project also highlights how IoT can democratize access to essential safety solutions.

Moreover, the potential to expand this technology into a larger safety ecosystem is vast. Future iterations of the device could integrate facial recognition, voice commands, or even integration with local emergency response systems. The development of such advanced features would enhance the device's functionality and broaden its applications. This project sets the foundation for a more secure and connected environment where technology serves as a protector, offering peace of mind to users, knowing that help is just a button press away.

## 1.3 Block diagram

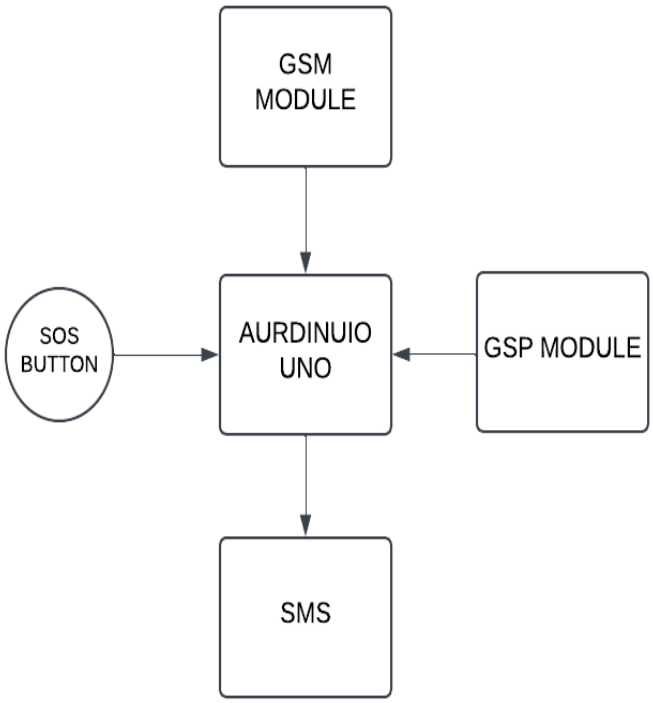


**Fig.1.3.1 Block Diagram**

## 1.4 Block Diagram Discription

Figure shows block diagram of Women's safety Panic Button. It contains,

Arduino ATMEGA 328
GPS NEO 6M Module
GSM800L Module
breadboard
SOS Button
Jumper Wires
Arduino IDE

The ATMEGA328-based Arduino Uno acts The women's safety device is a portable system built with an Arduino, GPS module, SIM800 GSM module, and an SOS button. When the SOS button is pressed for more than 3 seconds, it sends an emergency SMS with the user's real-time GPS location (latitude and longitude) to a predefined emergency contact. The system uses the GPS to track the location and the GSM module to send the SMS. This device can be powered by a battery, making it easy to carry and use in emergencies, providing a quick way to alert others and get help.

## 1.5 Advantages of the Project

- Real-Time Location Tracking – Sends live GPS location during emergencies.
- Instant Alert – Sends SMS quickly to a predefined contact when SOS button is pressed.
- No Internet Required – Works using GSM network, not dependent on Wi-Fi or mobile data.
- Cost-Effective – Uses affordable components like Arduino, GPS, and GSM modules.

## 1.6 Disadvantages of the Project

- GPS Signal Limitation – May not work properly indoors, in tunnels, or dense areas.
- Network Dependency – SMS may fail if GSM network is weak or unavailable.

## 1.7 Applications

- Personal Safety for Women – Helps women send emergency alerts during unsafe situations.
- College and School Students – Useful for students who travel alone.
- Solo Travelers or Trekkers – Provides location sharing in remote areas with no internet.
- Night Shift Workers – Ideal for individuals working late hours or in isolated areas.



*

# CHAPTER 2
# LITERATURE SURVEY

## 2.1 Literature Review

1.The women's safety device project leverages existing research on emergency response systems, which often utilize mobile phones and embedded devices for sending alerts during crises. Studies have shown that such systems, especially those using GSM and Bluetooth technologies, are effective in providing timely assistance during emergencies ([Chung et al., 2014]; [Singh et al., 2018]). These systems typically rely on simple, easy-to-use mechanisms like SOS buttons to activate alerts, ensuring quick responses.

2.The integration of GPS technology into emergency safety devices has become a key focus, as it allows for real-time location tracking in distress situations. GPS modules help pinpoint a person's exact location, which is crucial for emergency responders ([Kumar et al., 2017]; [Mehta et al., 2020]). When combined with GSM technology, these systems send detailed location-based alerts to predefined contacts, improving the chances of a swift and effective response. This integration of GPS with GSM has been widely adopted in safety devices to ensure accurate communication during emergencies.

3.Arduino-based solutions are increasingly popular in creating low-cost, customizable safety devices. Arduino platforms provide an accessible way to integrate various sensors, such as buttons, GPS, and GSM modules, into personal safety devices ([Jadhav et al., 2016]; [Lee et al., 2019]). This flexibility makes Arduino-based projects ideal for developing personal safety gadgets that can be tailored to user needs, while also ensuring portability and ease of use. Such devices, particularly those that use simple push buttons for alerting, are gaining attention for their practicality in real-world scenarios.

4.The future of women's safety devices is headed toward the integration of more advanced technologies, such as artificial intelligence (AI) and machine learning. These technologies could allow for smarter detection of distress signals, automatic emergency responses, and more accurate tracking ([Sreenivas et al., 2022]; [Singh et al., 2021]). Despite challenges in battery life, network coverage, and accessibility, there is significant potential for growth in this field, with future innovations focused on enhancing the reliability, portability, and functionality of safety devices.



*

# CHAPTER 3
# SOFTWARE DESIGN

## 3.1 Flow Chart

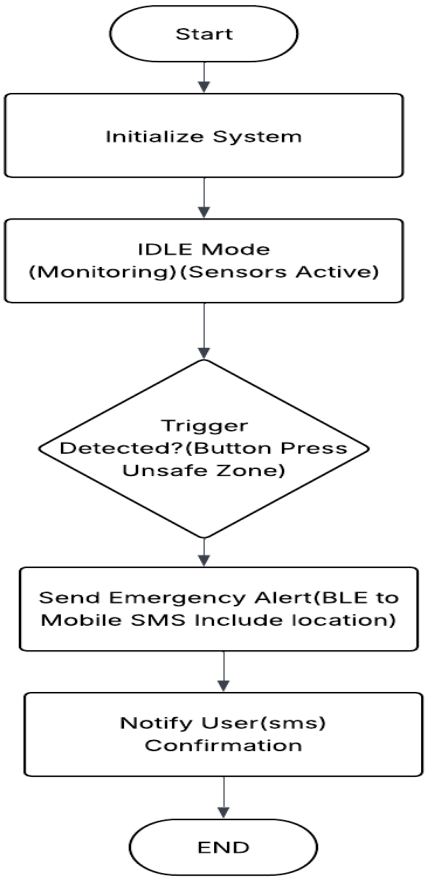


**Fig.3.1.1 Flow Chart**

**3.2**

## 3.3 Software requirements

**Introduction of „ARDUINO IDE‟ language:**

Arduino is an open-source electronics platform based on easy-touse hardware and Software. Arduino boards are able to read inputs – light on a sensor, a finger on a button, or a Twitter message – and turn it into an output –activating a motor, turning on an LED, publishing something online. You can tell your board what to do by sending a set of instructions to the microcontroller on the board. To do so you use the Arduino programming language (based on Wiring), and the Arduino Software (IDE), based on Processing. Over the years Arduino has been the brain of thousands of projects, from everyday objects to complex scientific instruments. A worldwide community of makers – students, hobbyists, artists, programmers, and professionals – has gathered around this open-source platform, their contributions have added up to an incredible amount of accessible knowledge that can be of great help to novices and experts alike. Arduino was born at the Vireo Interaction Design Institute as an easy tool for fast prototyping, aimed at students without a background in electronics and programming. As soon as it reached a wider community, the Arduino board started changing to adapt to new needs and challenges, differentiating its offer from simple 8-bit boards to products for IOT applications, wearable, 3D printing, and embedded environments. All Arduino boards are completely open- source, empowering users to build them independently and eventually adapt them to their particular needs. The software, too, is open-source, and it is growing through the contributions of users worldwide.

Over the years, Arduino has become the core of thousands of creative and technical projects – ranging from simple school experiments to advanced scientific instruments and smart home automation systems. A global community of developers, educators, students, and hobbyists supports and enriches the platform by sharing open-source code, tutorials, and ideas. Arduino was initially developed at the Ivrea Interaction Design Institute as a rapid prototyping tool, especially for students without prior knowledge of electronics or programming. As its popularity grew, the Arduino ecosystem expanded from basic 8-bit boards to more advanced boards like Arduino Mega, Due, and Nano, and now includes boards for IoT (Internet of Things), robotics, wearable technology, 3D printing, and more.

What makes Arduino truly powerful is its open-source nature – both hardware and software can be freely modified, shared, and enhanced. Users can create their own custom boards or develop libraries and tools to extend the platform’s capabilities. It supports a variety of sensors, actuators, wireless communication modules like Bluetooth, Wi-Fi, GSM, and GPS, which makes it highly adaptable for real-time embedded systems. Additionally, the Arduino IDE now supports multiple board types, cloud integration (Arduino Web Editor), and even Python programming (via MicroPython on some boards). With its flexibility, simplicity, and strong community, Arduino continues to be an ideal platform for learning, innovation, and real-world problem solving.

**Program**

```
#include <SoftwareSerial.h>
#include <TinyGPS++.h>


// Define software serial for GSM and GPS
SoftwareSerial gsm(7, 8);
SoftwareSerial gps(3, 4);


TinyGPSPlus gpsParser;
const int sosButton = 2;
unsigned long pressStartTime = 0;
bool buttonPressed = false;


void setup() {
  Serial.begin(9600);
  gsm.begin(9600);
  gps.begin(9600);

  pinMode(sosButton, INPUT_PULLUP);
  Serial.println("System Ready");
}


void loop() {
  // Read GPS data
  while (gps.available()) {
    gpsParser.encode(gps.read());
```

```
//Read SOS button state
  if (digitalRead(sosButton) == LOW) {
    if (!buttonPressed) {
      buttonPressed = true;
      pressStartTime = millis();
    }
    if (millis() - pressStartTime >= 3000) {
      sendAlert();
      delay(5000);
    }
  } else {
    buttonPressed = false;
  }
}


void sendAlert() {

  Serial.println("Sending Alert...");
  String locationMessage = " Emergency! Need Help! ";

  if (gpsParser.location.isValid()) {
    float latitude = gpsParser.location.lat();
    float longitude = gpsParser.location.lng();
    locationMessage += "https://maps.google.com/?q=" + String(latitude, 6) + "," +
String(longitude, 6);
  } else {
    locationMessage += "locationMessage";
  }

  sendSMS("+918625081790", locationMessage);
}
```

```
void sendSMS(String number, String message) {
  gsm.println("AT+CMGF=1");
  delay(1000);
  gsm.println("AT+CMGS=\"" + number + "\"");
  delay(1000);
  gsm.println(message);
  delay(1000);
  gsm.write(26);
  delay(3000);
  Serial.println("SMS Sent!");

}
```

### 3.2.1 Circuit Diagram:

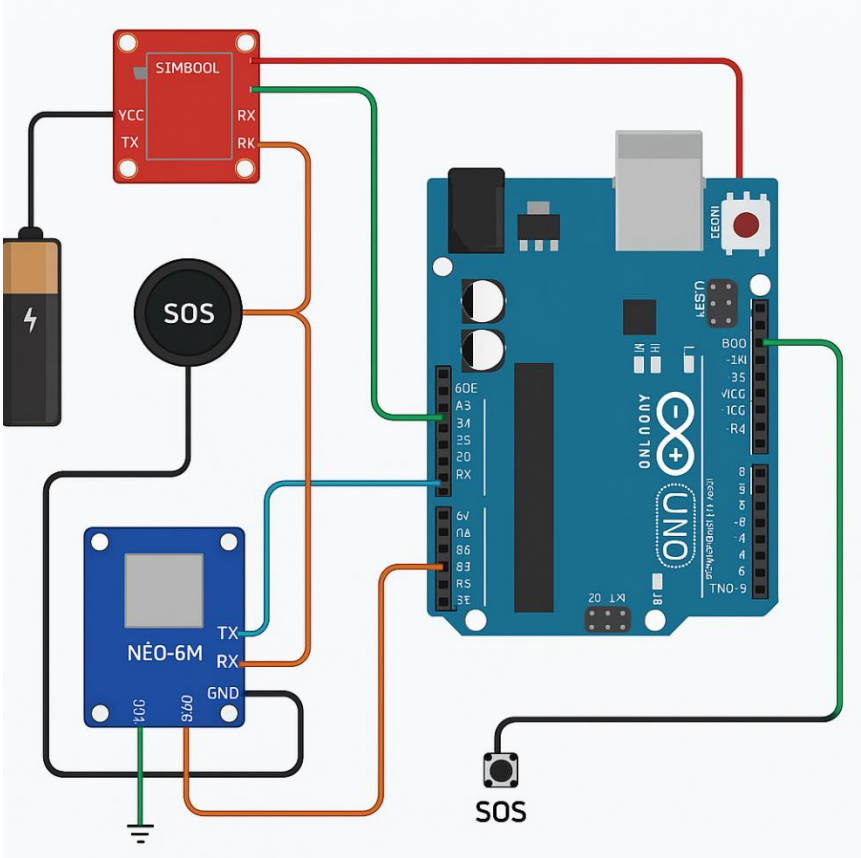


**Fig.3.2.1 Circuit Diagram**

### 3.3.2 Circuit Diagram Overview:

The circuit consists of an Arduino, a SIM800 GSM module, a GPS Neo-6 module, and an SOS button**.** The SOS button is connected to a digital input pin on the Arduino. When the button is pressed for more than 3 seconds, the Arduino triggers the SIM800 GSM module to send an SMS. The GPS Neo-6 module is used to get the live location of the device, which is then sent to a predefined phone number via SMS.

**Working:**

1. SOS Button Press:
    - The SOS button is connected to Digital Pin 7 of the Arduino. When the button is pressed, it sends a LOW signal to this pin. The Arduino continuously checks the duration of the press by monitoring Pin 7**.**
    - If the button is pressed for more than 3 seconds, the Arduino detects this and triggers the GSM module to send an SMS.
2. GPS Data Retrieval:
    - The GPS Neo-6 module is connected to the TX and RX pins of the Arduino (pins 8 and 9, for example). The GPS module continuously provides location data via the serial interface. The Arduino reads this data using the Serial library and extracts the latitude and longitude values.
3. SMS Sending:
    - Once the SOS button has been pressed for the required time, the Arduino sends commands to the SIM800 GSM module via the TX/RX pins (pins 10 and 11 on the Arduino).
    - The SIM800 receives the latitude and longitude data from the Arduino, formats it into an SMS message, and sends it to a predefined phone number.

**Detailed Functionality:**

- The SOS button triggers a check every millisecond on Pin 7 of the Arduino. When the button stays pressed for 3 seconds, the Arduino sends a signal to the SIM800 GSM modu**le** to initiate the SMS process.
- The GPS Neo-6 module continuously provides real-time location data. The Arduino retrieves this data (latitude and longitude) and formats it into a string that can be sent via the GSM module.
- After 3 seconds of button press, the SIM800 module sends a message containing the location information (latitude and longitude) to the emergency contact number.

## 3.4 IoT (Internet of Things)

The Internet of Things (IoT) describes the network of physical object things that are embedded with sensors, software, and other technologies for the purpose of connecting and exchanging data with other devices and systems over the internet. These devices range from ordinary household objects to sophisticated industrial tools. With more than 7 billion connected IoT devices today, experts are expecting this number to grow to 10 billion by 2020 and 22 billion by 2025.

Over the past few years, IoT has become one of the most important technologies of the 21st century. Now that we can connect everyday objects kitchen appliances, cars, thermostats, baby monitors to the internet via embedded devices, seamless communication is possible between people, processes, and things.

By means of low-cost computing, the cloud, big data, analytics, and mobile technologies, physical things can share and collect data with minimal human intervention. In this hyperconnected world, digital systems can record, monitor, and adjust each interaction between connected things. The physical world meets the digital world and they cooperate.

# CHAPTER 4
# HARDWARE SPECIFICATIONS

## 4.1 Components of the circuit:

- GSM800L Module
- ATMEGA 328
- LCD Display
- Arduino

## 4.2 GSM800L Module

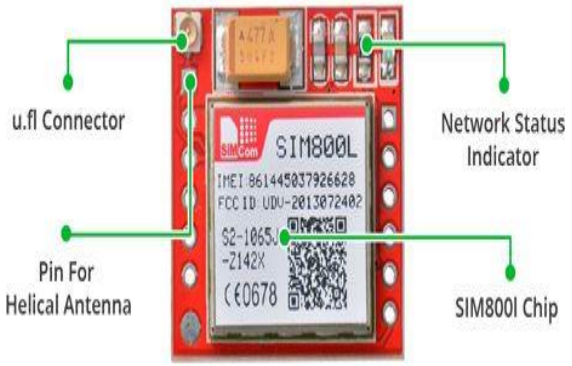


**Fig.4.2.1 GSM 800L module**

The ESP-02 module is a highly integrated The GSM 800L module is a low-cost, compact GSM/GPRS module designed for wireless communication. It operates on 2G GSM frequencies (850 MHz, 900 MHz, 1800 MHz, 1900 MHz), making it compatible with various mobile networks worldwide. The module supports SMS messaging, voice calls, and GPRS (General Packet Radio Service) for internet connectivity. It can be easily controlled using AT commands, which are sent through a microcontroller such as Arduino or ESP32 via UART (serial communication). This makes the GSM 800L a popular choice for remote communication applications like home automation, GPS tracking, and emergency alert systems.

The GSM 800L module requires a power supply of 3.4V to 4.4V, and it typically comes with a simple interface for easy integration with microcontrollers. The module is equipped with an external antenna connector to improve signal reception, ensuring reliable communication in different environments. Due to its low power consumption, ease of use, and wide availability, the GSM 800L is widely adopted for building cost-effective wireless solutions. Its versatility makes it ideal for IoT projects, such as smart homes, security systems, and remote sensor monitoring.

### 4.2.1 Pin diagram of GSM800L module

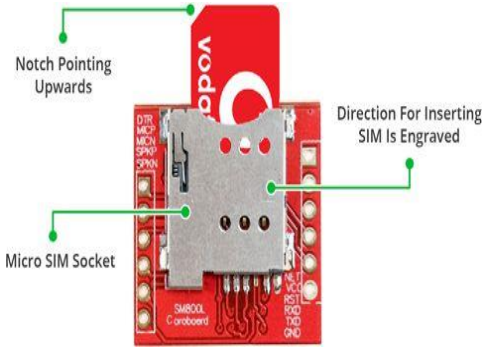


**FIg.4.3.1**

The GSM 800L module typically has a 6-pin interface for communication and control. The key pins include VCC (Pin 1), which supplies power to the module, requiring a voltage between 3.4V to 4.4V. GND (Pin 2) is the ground pin, which should be connected to the negative terminal of the power source. Pin 3 (TXD) is the transmit data pin, which sends serial data from the GSM module to the microcontroller. Pin 4 (RXD) is the receive data pin, which receives serial data from the microcontroller to the GSM module. Pin 5 (RST) is the reset pin, used to restart the module when needed, and Pin 6 (Status) provides information about the current status of the module, indicating whether it is properly initialized or not. In addition to these basic pins, the GSM 800L may have additional pins for other functionalities. For instance, the module includes a power input pin (VCC) that connects to the power supply for operation, and an antenna pin for connecting an external antenna to improve signal strength and reception. The TXD and RXD pins communicate with the microcontroller for sending and receiving data, such as AT commands or SMS messages. By connecting these pins to the appropriate microcontroller and power supply, users can effectively integrate the GSM 800L into IoT applications, enabling remote communication via SMS or voice calls.

### 4.2.2 Pin Configuration of GSM800L

Pin Configuration in the table shown in the figure given below.

**Fig.4.3.2 Pin Configuration**

### 4.2.3 Pin Description

VCC: This pin is used to supply power to the GSM 800L module. It requires a voltage between 3.4V to 4.4V to function properly.

GND: The ground pin is used to connect the module to the negative terminal of the power supply. It serves as a reference for the VCC voltage and completes the circuit.

TXD: The transmit data pin (TXD) is used for serial communication. It transmits data (such as AT commands) from the GSM module to the microcontroller. It is connected to the RX pin of the microcontroller.

RXD: The receive data pin (RXD) is used to receive serial data (such as responses to AT commands) from the microcontroller. It is connected to the TX pin of the microcontroller.

RST: The reset pin is used to reset the GSM 800L module. When a low signal is applied, it restarts the module, helping in case of a crash or to re-initialize the system.

STATUS: This pin provides the status of the GSM 800L module. It indicates whether the module is initialized, connected to the network, or if there is any issue. Typically, it gives a high or low signal based on the module's status.

ANT: The antenna pin is used to connect an external antenna to the GSM 800L module. It enhances the signal strength and reception for better communication.

| GSM SIM800H | Description |
|---|---|
| Processing Performance | • Quad-band 850/900/1800/1900MHz<br>•GPRS multi-slot class 12/10<br>• GPRS mobile station class B<br>• Compliant to GSM phase 2/2+ |
| Supply voltage | 3.8V- 5V |
| Recommended supply voltage | 4V |
| Power consumption | • sleep mode < 2.0mA<br>• idle mode < 7.0mA<br>• GSM transmission (avg.): 350 mA.<br>• GSM transmission (peek): 2000 mA.<br>• Module size: 25 x 23 mm. |
| Weight | 1.35 g |
| SIM card socket | Micro SIM |
| Supported frequencies | Quad Band (850 / 950 / 1800 /1900 MHz) |
| Antenna connector | IPX |
| Working temperature range | -40 do + 85 ° C |

**Fig.4.3.3 Pin Discription**

## 4.3.SOS Button

**Fig.4.3.1 SOS Button**

An SOS button is a simple yet crucial component used in emergency situations for sending distress signals or alerts. When pressed, it triggers an action such as sending a pre-defined message, making a phone call, or activating an alarm. In IoT and safety applications, the SOS button is commonly integrated with systems like GPS trackers, emergency alert systems, or personal safety devices. For instance, when pressed for more than a few seconds, the button can send an SMS with the user's live location to a designated number, helping emergency responders or loved ones quickly locate and assist the person in distress. The SOS button is typically connected to a microcontroller or GSM module, which handles the communication and notification process.

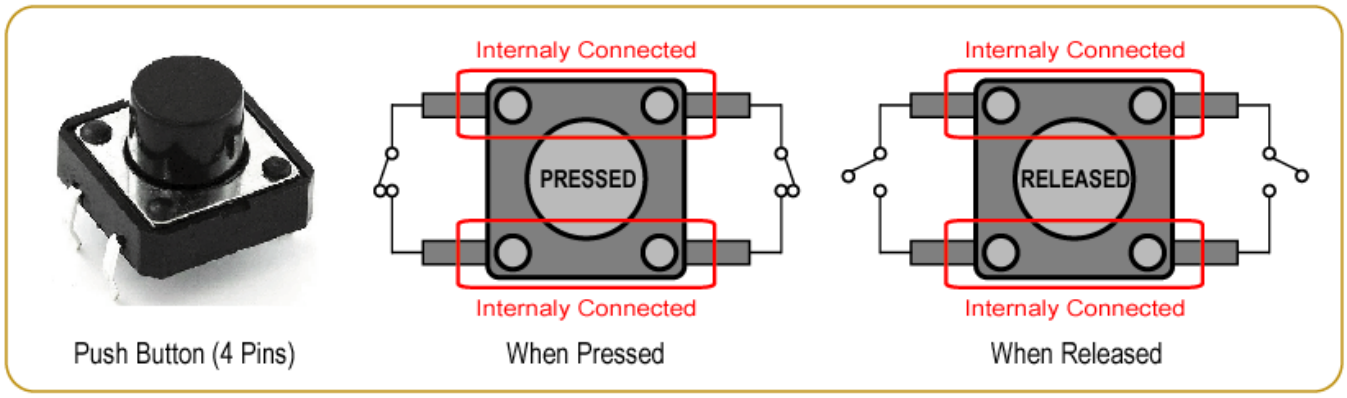


**Fig.4.3.1 Pin Configuration**

## 4.4. Arduino

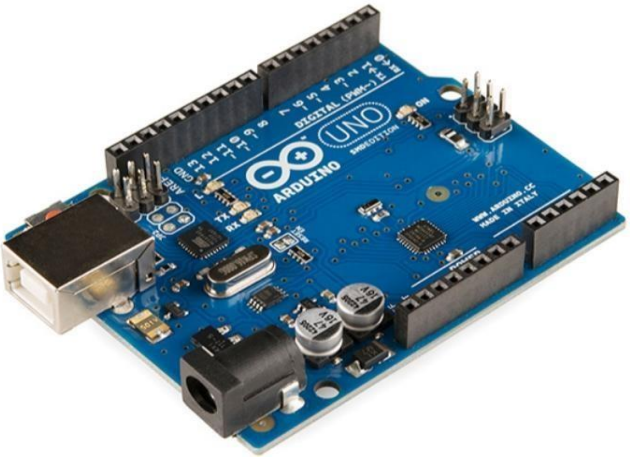


**Fig.4.5.1 Arduino**

The Arduino is an open-source microcontroller board based on the Microchip ATmega328P microcontroller and developed by Arduino.cc. The board is equipped with sets of digital and analog input/output (I/O) pins that may be interfaced to various expansion boards (shields) and other circuits. The board has 14 digital I/O pins (six capable of PWM output), 6 analog I/O pins, and is programmable with the Arduino IDE (Integrated Development Environment), via a type B USB cable. It can be powered by the USB cable or by an external 9-volt battery, though it accepts voltages between 7 and 20 volts. It is similar to the Arduino Nano and Leonardo. The hardware reference design is distributed under a Creative Commons Attribution Share-Alike 2.5 license and is available on the Arduino website. Layout and production files for some versions of the hardware are also available. The board is equipped with sets of digital and analog input/output (I/O) pins that may be interfaced to various expansion boards (shields) and other circuits. The board has 14 digital I/O pins (six capable of PWM output), 6 analog I/O pins, and is programmable with the Arduino IDE (Integrated Development Environment), via a type B USB cable. It can be powered by the USB cable or by an external 9-volt battery, though it accepts voltages between 7 and 20 volts. It is similar to the Arduino Nano and Leonardo.

| Microcontroller | ATmega328 |
|---|---|
| Clock Speed | 16MHz |
| Operating Voltage | 5V |
| Maximum supply Voltage (not recommended) | 20V |
| Supply Voltage (recommended) | 7-12V |
| Analog Input Pins | 6 |
| Digital Input/ Output Pins | 14 |
| DC Current Per Input/ Output Pins | 40mA |
| DC Current in 3.3V Pin | 50mA |
| SRAM | 2KB |
| EEPROM | 1kB |
| Flash Memory | 32 KB |

**Fig.4.5.1 Technical Specifications**

## 4.4.1 Technical Specification

Arduino Specification

• Microcontroller: ATmega328-PU
• Operating Voltage: 5V
• Input Voltage (recommended): 7-12V
• In out Voltage (limit): 6-20V
• Digital I/O Pins: 14 (of which 6 provide PWM output)
• PWM Digital I/O Pins: 6

## 4.4.2 Pin Functions

- LED: There is a built-in LED driven by digital pin 13. When the pin is high value, the LED is on, when the pin is low, it is off.
- VIN: The input voltage to the Arduino/Genuino board when it is using an external power source (as opposed to 5 volts from the USB connection or other regulated power source). You can supply voltage through this pin, or, if supplying voltage via the power jack, access it through this pin.
- 5V: This pin outputs a regulated 5V from the regulator on the board. The board can be supplied with power either from the DC power jack (7 – 20V), the USB connector (5V), or the VIN pin of the board (7-20V). Supplying voltage via the 5V or 3.3V pins bypasses the regulator, and can damage the board.

- 3V3: A 3.3 volt supply generated by the on-board regulator. Maximum current draw is 50 mA.
- GND: Ground pins
- IOREF: This pin on the Arduino board provides the voltage reference with which the microcontroller operates. A properly configured shield can read the IOREF pin voltage and select the appropriate power source, or enable voltage translators on the outputs to work with the 5V or 3.3V.
- Reset: Typically used to add a reset button to shields that block the one on the board.

## 4.5. GPS Neo 6M

**Fig.4.5.1 GPS NEO 6M**

The GPS Neo-6M module also includes an onboard EEPROM, which allows storage of configuration settings and makes it possible to retain custom settings even after the power is turned off. This is especially useful in long-term or permanent installations, where reconfiguring the module every time it starts would be inefficient. It also supports Assisted GPS (A-GPS), which helps reduce the time to first fix (TTFF), especially in weak signal conditions, by using previously saved satellite data. This means the module can quickly determine its position even after being off for some time.

The GPS Neo-6M module also includes an onboard EEPROM, which allows storage of configuration settings and makes it possible to retain custom settings even after the power is turned off. This is especially useful in long-term or permanent installations, where reconfiguring the module every time it starts would be inefficient. It also supports Assisted GPS (A-GPS), which helps reduce the time to first fix (TTFF), especially in weak signal conditions, by using previously saved satellite data. This means the module can quickly determine its position even after being off for some time.

Another benefit of the Neo-6M module is its stability and robustness in various environmental conditions. It is capable of working in temperatures ranging from -40°C to +85°C, making it suitable for outdoor and industrial applications. Developers can use libraries such as Tiny GPS++ in the Arduino IDE to easily parse the GPS data into human-readable format. This includes extracting data like speed, direction, date, and number of connected satellites. With proper coding and setup, the Neo-6M can also trigger other modules (like GSM) to send location data automatically in emergency or tracking applications.

Overall, the GPS Neo-6M is a versatile, reliable, and affordable GPS solution that can be easily integrated into numerous real-world applications. Its compatibility with common development boards, along with its strong performance and flexibility, makes it a favorite choice among students, hobbyists, and engineers alike. When combined with other modules like GSM or sensors, it becomes a powerful tool for building smart tracking systems, personal safety devices, automated vehicles, and more.

| Hardware | NEO 6M GPS Module |
|---|---|
| Update Rate | 1 – 5 Hz |
| Sensitivity | -161dBm |
| UART Baud rate | 9600 |
| Operating Voltage | 3 – 5 V |
| Function | Location Tracking |

**FIg.4.7.2 Technical Specifications**

## 4.5.2 Pin Description

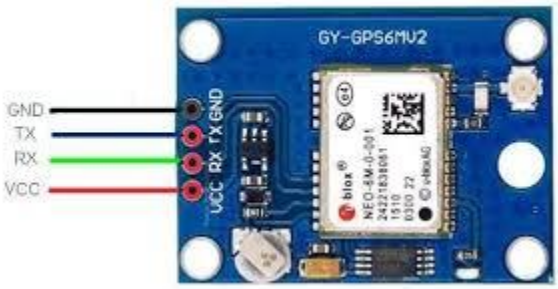


**Fig.4.8.1 Pin Discription**

The GPS Neo-6M module typically comes with four main pins**:** VCC**,** GND**,** TX**,** and RX**.** The VCC pin is used to power the module and usually accepts a voltage between 3.3V to 5V, depending on the onboard voltage regulator. It is compatible with Arduino boards that operate at 5V, making it easy to connect without extra components. The GND pin is the ground connection and should be connected to the ground of the microcontroller or power source to complete the circuit.

The TX (Transmit) pin is used to send serial data from the GPS module to the microcontroller. This pin should be connected to the RX (Receive) pin of the Arduino or other controllers. The GPS continuously sends data in NMEA format, which contains information like time, date, latitude, longitude, speed, and more. The RX (Receive) pin is meant to receive data from the microcontroller, but it is often unused in basic applications, as most GPS functions only require data to be read from the GPS module. Some versions of the module also include a PPS (Pulse Per Second) pin, which gives a pulse every second for precise timing, used in advanced GPS applications like time synchronization. Overall, the simple 4-pin interface makes the Neo-6M easy to integrate into GPS-based projects.

# CHAPTER 5
# APPLICATIONS & LIMITATIONS

## 5.1 Applications

- Personal Safety for Women – Helps women send emergency alerts during unsafe situations.
- College and School Students – Useful for students who travel alone.
- Solo Travelers or Trekkers – Provides location sharing in remote areas with no internet.
- Night Shift Workers – Ideal for individuals working late hours or in isolated areas.

## 5.2 Limitations

- No feedback to user—there's no alert (like LED or sound) to confirm if SMS was sent.

## 5.3 Future Scope

The future scope of the Arduino-based women safety Panic Button is wide and promising, as it addresses a critical real-world problem using simple and affordable technology. In the future, the device can be made more compact and wearable, like a bracelet or pendant, for ease of use and better portability. Features such as real-time tracking using a mobile app, voice communication, and live video streaming can also be added for enhanced safety. Integration with cloud services and AI-based systems could allow automatic detection of unusual activity and send alerts without manual input. Additionally, the device can be powered using energy-efficient components or solar charging for longer battery life. Future versions may also include biometric sensors to monitor heart rate or stress levels, triggering automatic alerts during panic situations. Large-scale deployment of this system in public areas, schools, and transportation services can create a smart safety network for women. With the support of government and social organizations, this project has the potential to become a vital tool for ensuring women's safety and empowering them to act quickly in emergencies.

# CHAPTER 6
# RESULT

## 6.1 Result and Discussion

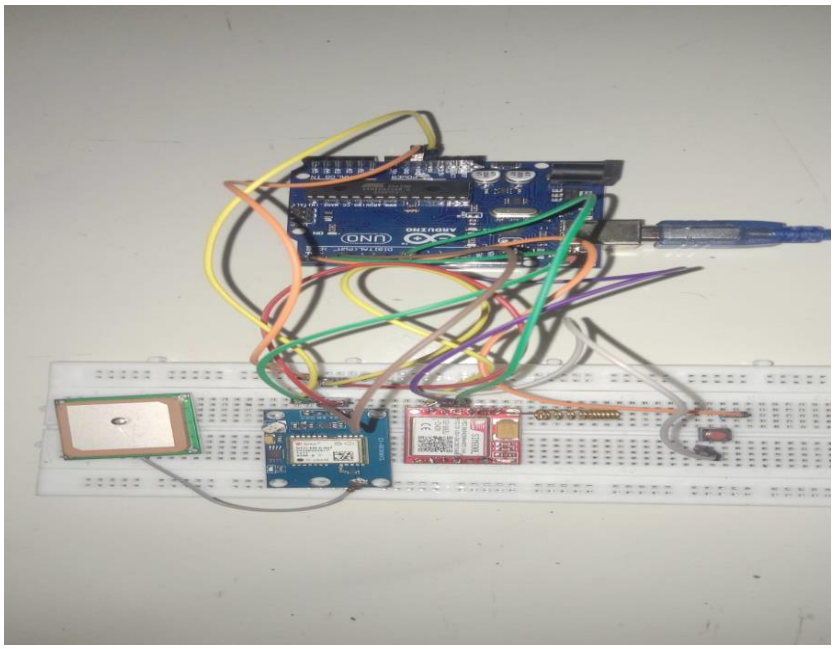

**Fig 6.1.1 Result**

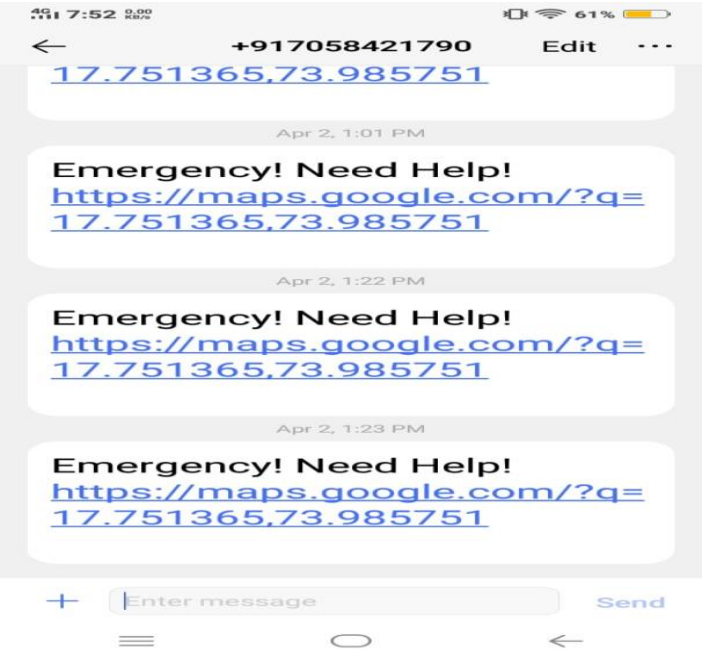


**Fig.6.1.2 Graphical Result**



33

# CHAPTER 7
# CONCLUSION

This project provides a simple and low-cost emergency alert system using Arduino, GPS, and GSM. When the SOS button is pressed for more than 3 seconds, the system automatically sends the live location to a predefined mobile number. It is useful for personal safety, especially for elderly people, children, or solo travelers**.** With some improvements, it can be made more secure and reliable for real-world use.

# CHAPTER 8
# REFERENCES

[1] Sharma, A. and Verma, P., ―Design and Implementation of Arduino-Based Women Safety Device Using GPS and GSM Modules‖, International Journal of Engineering and Technology (IJET), Vol. 6, Issue 04, April 2021.

[2] Gupta, S. and Sinha, M., ―Development of Women Safety System with GPS and GSM Technology for Emergency Assistance‖, International Journal of Innovative Research in Electronics and Communication (IJIREC), Vol. 7 No. 2, 2020, pp 99-112.

[3] Kumar, R. and Patel, A., ―Women Safety Using IoT with Arduino and GPS‖, International Journal of Computer Science and Engineering (IJCSE), Vol. 8 No. 5, May 2019.

[4] Sharma, R., Singh, A., and Yadav, P., ―Women Safety Monitoring System Using Arduino and GSM Module‖, International Journal of Computer Applications, Vol. 156, No. 4, December 2017.

[5] Singh, R., and Sahu, S., ―Implementation of Real-Time Women Safety System with IoT and Arduino‖, International Journal of Science, Engineering and Technology Research (IJSETR), Volume 5, Issue 8, August 2017.