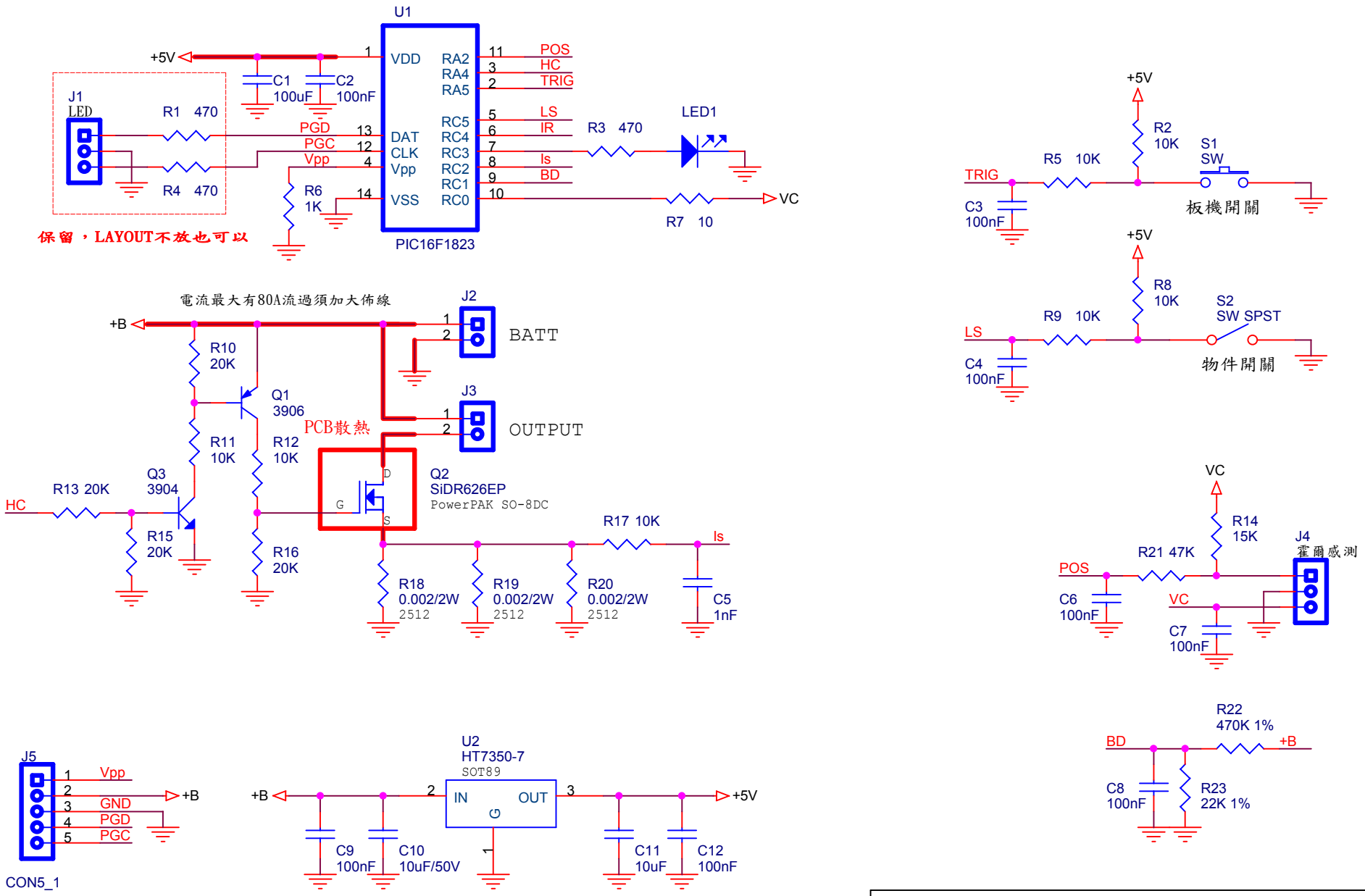

Title

電動馬達打釘槍

Size	Document Number	Rev
A	<Doc>	

Date: Tuesday, June 11, 2024 Sheet 1 of 1