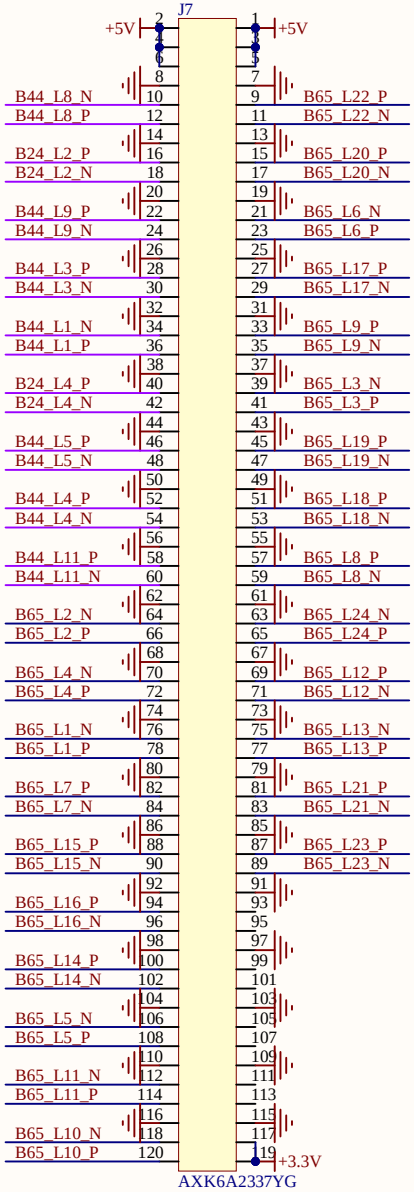
J7
+5V
+5V
B44_L8_N
B44_L8_P
B24_L2_P
B24_L2_N
B44_L9_P
B44_L9_N
B44_L3_P
B44_L3_N
B44_L1_N
B44_L1_P
B24_L4_P
B24_L4_N
B44_L5_P
B44_L5_N
B44_L4_P
B44_L4_N
B44_L11_P
B44_L11_N
B65_L2_N
B65_L2_P
B65_L4_N
B65_L4_P
B65_L1_N
B65_L1_P
B65_L7_P
B65_L7_N
B65_L15_P
B65_L15_N
B65_L16_P
B65_L16_N
B65_L14_P
B65_L14_N
B65_L5_N
B65_L5_P
B65_L11_N
B65_L11_P
B65_L10_N
B65_L10_P
B65_L22_P
B65_L22_N
B65_L20_P
B65_L20_N
B65_L6_N
B65_L6_P
B65_L17_P
B65_L17_N
B65_L9_P
B65_L9_N
B65_L3_N
B65_L3_P
B65_L19_P
B65_L19_N
B65_L18_P
B65_L18_N
B65_L8_P
B65_L8_N
B65_L24_N
B65_L24_P
B65_L12_P
B65_L12_N
B65_L13_N
B65_L13_P
B65_L21_P
B65_L21_N
B65_L23_P
B65_L23_N
+3.3V
AXK6A2337YG

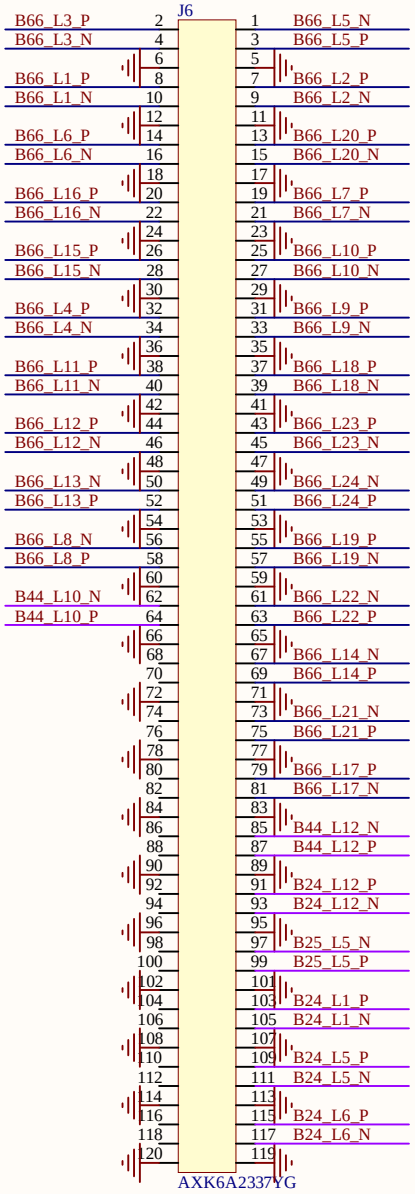
J6
B66_L3_P
B66_L3_N
B66_L1_P
B66_L1_N
B66_L6_P
B66_L6_N
B66_L16_P
B66_L16_N
B66_L15_P
B66_L15_N
B66_L4_P
B66_L4_N
B66_L11_P
B66_L11_N
B66_L12_P
B66_L12_N
B66_L13_N
B66_L13_P
B66_L8_N
B66_L8_P
B44_L10_N
B44_L10_P
B66_L5_N
B66_L5_P
B66_L2_P
B66_L2_N
B66_L20_P
B66_L20_N
B66_L7_P
B66_L7_N
B66_L10_P
B66_L10_N
B66_L9_P
B66_L9_N
B66_L18_P
B66_L18_N
B66_L23_P
B66_L23_N
B66_L24_N
B66_L24_P
B66_L19_P
B66_L19_N
B66_L22_N
B66_L22_P
B66_L14_N
B66_L14_P
B66_L21_N
B66_L21_P
B66_L17_P
B66_L17_N
B44_L12_N
B44_L12_P
B24_L12_P
B24_L12_N
B25_L5_N
B25_L5_P
B24_L1_P
B24_L1_N
B24_L5_P
B24_L5_N
B24_L6_P
B24_L6_N
AXK6A2337YG

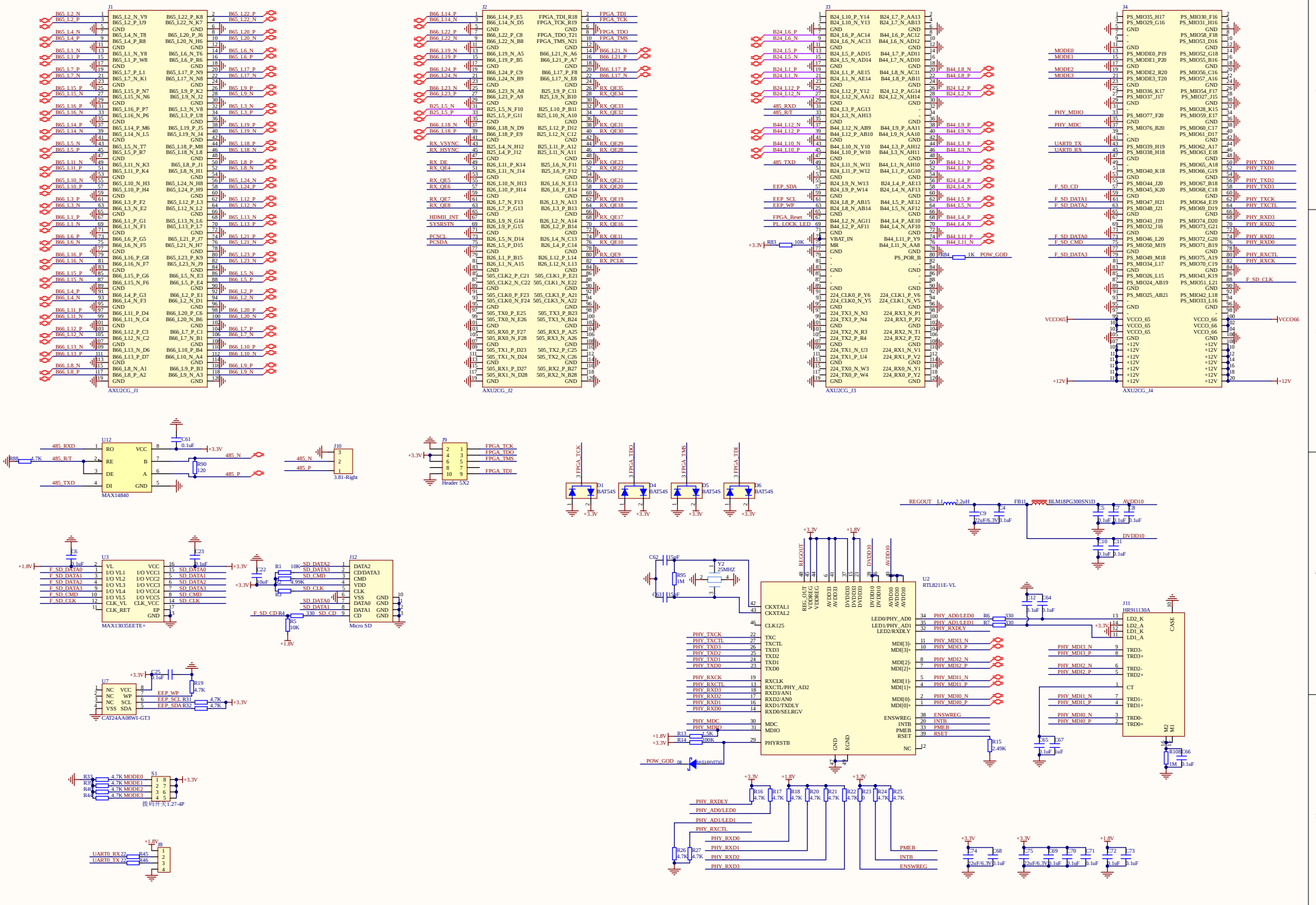
J1
AXU2CG_J1
J2
AXU2CG_J2
J3
AXU2CG_J3
J4
AXU2CG_J4
U12
MAX14840
J10
3.81-Right
J9
Header 5X2
D1 BAT54S
D4 BAT54S
D5 BAT54S
D6 BAT54S
U3
MAX13035EETE+
J12
Micro SD
U2
RTL8211E-VL
J11
HR911130A
U7
CAT24AA08W1-GT3
S1
拨码开关1.27-4P
J8

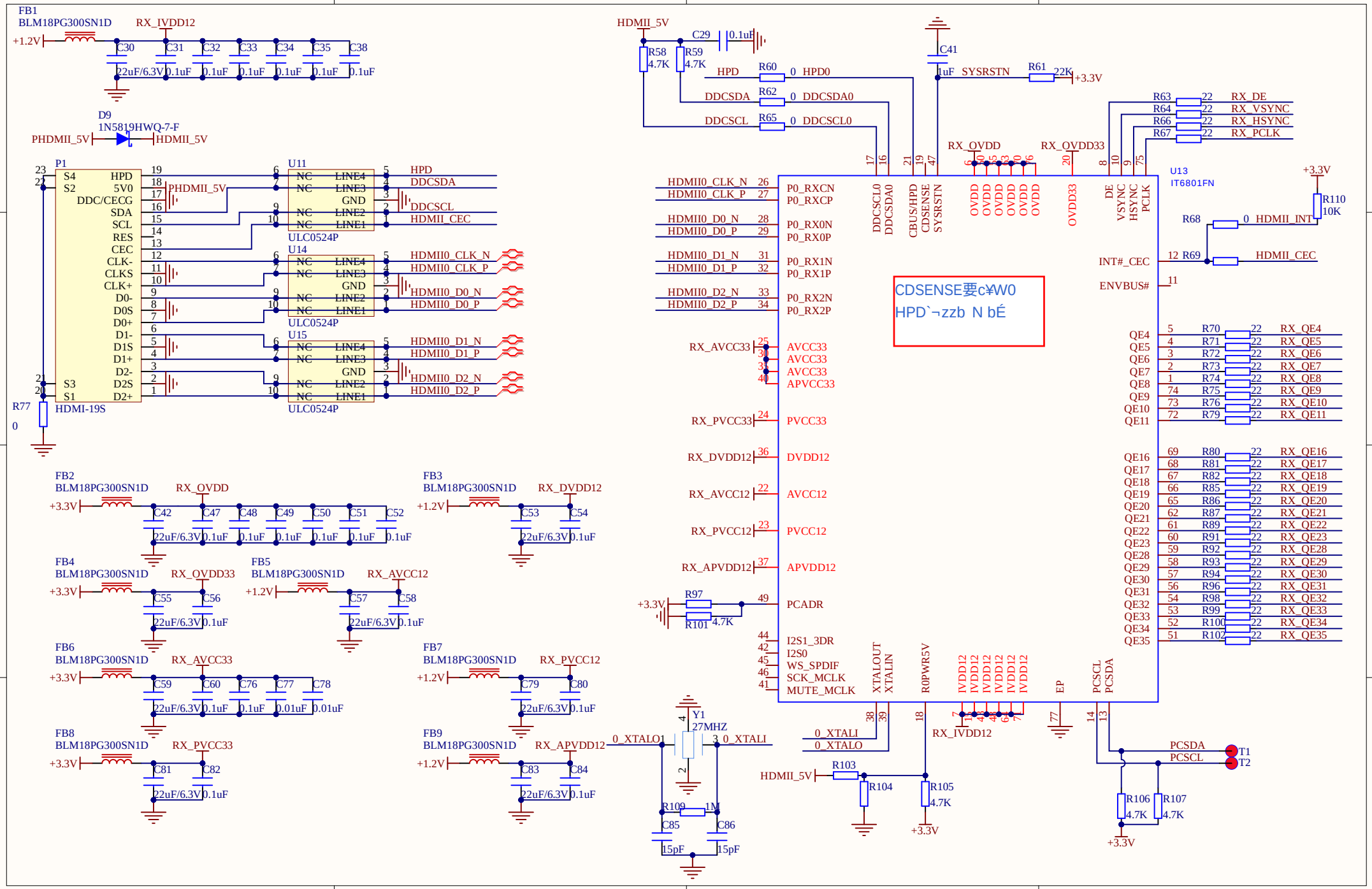
FB1
BLM18PG300SN1D
RX_IVDD12
+1.2V
C30 C31 C32 C33 C34 C35 C38
22uF/6.3V 0.1uF 0.1uF 0.1uF 0.1uF 0.1uF 0.1uF
D9
1N5819HWQ-7-F
PHDMII_5V
HDMII_5V
P1
HDMI-19S
U11
U14
U15
ULC0524P
HPD
DDCSDA
DDCSCL
HDMII_CEC
HDMII0_CLK_N
HDMII0_CLK_P
HDMII0_D0_N
HDMII0_D0_P
HDMII0_D1_N
HDMII0_D1_P
HDMII0_D2_N
HDMII0_D2_P
R77
0
FB2
BLM18PG300SN1D
RX_OVDD
+3.3V
C42 C47 C48 C49 C50 C51 C52
22uF/6.3V 0.1uF 0.1uF 0.1uF 0.1uF 0.1uF 0.1uF
FB3
BLM18PG300SN1D
RX_DVDD12
+1.2V
C53 C54
22uF/6.3V 0.1uF
FB4
BLM18PG300SN1D
RX_OVDD33
C55 C56
22uF/6.3V 0.1uF
FB5
BLM18PG300SN1D
RX_AVCC12
C57 C58
22uF/6.3V 0.1uF
FB6
BLM18PG300SN1D
RX_AVCC33
C59 C60 C76 C77 C78
22uF/6.3V 0.1uF 0.1uF 0.01uF 0.01uF
FB7
BLM18PG300SN1D
RX_PVCC12
C79 C80
22uF/6.3V 0.1uF
FB8
BLM18PG300SN1D
RX_PVCC33
C81 C82
22uF/6.3V 0.1uF
FB9
BLM18PG300SN1D
RX_APVDD12
C83 C84
22uF/6.3V 0.1uF
HDMII_5V
C29 0.1uF
R58 4.7K
R59 4.7K
HPD R60 0 HPD0
DDCSDA R62 0 DDCSDA0
DDCSCL R65 0 DDCSCL0
C41 1uF
SYSRSTN R61 22K +3.3V
R63 22 RX_DE
R64 22 RX_VSYNC
R66 22 RX_HSYNC
R67 22 RX_PCLK
RX_OVDD
RX_OVDD33
U13
IT6801FN
+3.3V
R110 10K
R68 0 HDMII_INT
R69 HDMII_CEC
INT#_CEC
ENVBUS#
CDSENSE要c¥W0
HPD`¬zzb N bÉ
P0_RXCN
P0_RXCP
P0_RX0N
P0_RX0P
P0_RX1N
P0_RX1P
P0_RX2N
P0_RX2P
AVCC33
APVCC33
PVCC33
DVDD12
AVCC12
PVCC12
APVDD12
PCADR
I2S1_3DR
I2S0
WS_SPDIF
SCK_MCLK
MUTE_MCLK
DDCSCL0
DDCSDA0
CBUS/HPD
CDSENSE
SYSRSTN
OVDD
OVDD33
DE
VSYNC
HSYNC
PCLK
XTALOUT
XTALIN
R0PWR5V
IVDD12
EP
PCSCL
PCSDA
QE4 R70 22 RX_QE4
QE5 R71 22 RX_QE5
QE6 R72 22 RX_QE6
QE7 R73 22 RX_QE7
QE8 R74 22 RX_QE8
QE9 R75 22 RX_QE9
QE10 R76 22 RX_QE10
QE11 R79 22 RX_QE11
QE16 R80 22 RX_QE16
QE17 R81 22 RX_QE17
QE18 R82 22 RX_QE18
QE19 R85 22 RX_QE19
QE20 R86 22 RX_QE20
QE21 R87 22 RX_QE21
QE22 R89 22 RX_QE22
QE23 R91 22 RX_QE23
QE28 R92 22 RX_QE28
QE29 R93 22 RX_QE29
QE30 R94 22 RX_QE30
QE31 R96 22 RX_QE31
QE32 R98 22 RX_QE32
QE33 R99 22 RX_QE33
QE34 R100 22 RX_QE34
QE35 R102 22 RX_QE35
R97
R101 4.7K
0_XTALI
0_XTALO
RX_IVDD12
R103
R104
R105 4.7K
+3.3V
Y1
27MHZ
0_XTALO1
0_XTALI
R109 1M
C85 C86
15pF 15pF
PCSDA
PCSCL
T1
T2
R106 4.7K
R107 4.7K

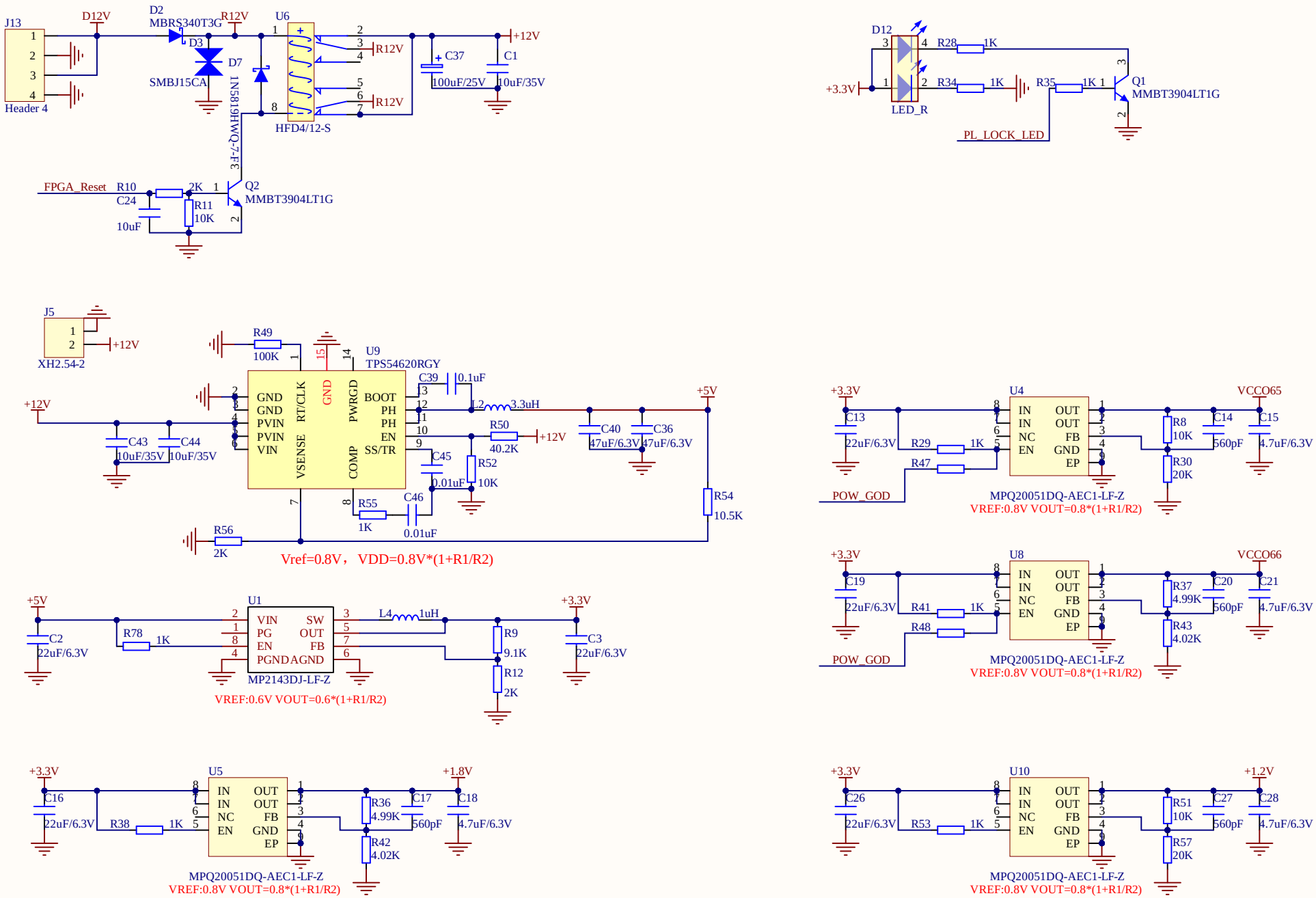
J13
Header 4
D12V
D2
MBRS340T3G
R12V
D3
D7
SMBJ15CA
U6
HFD4/12-S
C37
100uF/25V
C1
10uF/35V
+12V
FPGA_Reset
R10
2K
C24
10uF
R11
10K
Q2
MMBT3904LT1G
D12
LED_R
R28
1K
R34
R35
+3.3V
Q1
MMBT3904LT1G
PL_LOCK_LED
J5
XH2.54-2
R49
100K
U9
TPS54620RGY
GND
PVIN
VIN
RT/CLK
VSENSE
PWRGD
COMP
BOOT
PH
EN
SS/TR
C39
0.1uF
L2
3.3uH
+5V
C43
10uF/35V
C44
10uF/35V
R50
40.2K
C40
47uF/6.3V
C36
47uF/6.3V
C45
0.01uF
R52
10K
R55
1K
C46
0.01uF
R54
10.5K
R56
2K
Vref=0.8V，VDD=0.8V*(1+R1/R2)
U4
IN
NC
OUT
FB
GND
EP
C13
22uF/6.3V
R29
R47
POW_GOD
R8
10K
R30
20K
C14
560pF
C15
4.7uF/6.3V
VCCO65
MPQ20051DQ-AEC1-LF-Z
VREF:0.8V VOUT=0.8*(1+R1/R2)
U8
C19
22uF/6.3V
R41
R48
R37
4.99K
R43
4.02K
C20
560pF
C21
4.7uF/6.3V
VCCO66
U1
VIN
PG
EN
PGND
SW
OUT
FB
AGND
MP2143DJ-LF-Z
VREF:0.6V VOUT=0.6*(1+R1/R2)
C2
22uF/6.3V
R78
L4
1uH
R9
9.1K
R12
2K
C3
22uF/6.3V
U5
C16
22uF/6.3V
R38
R36
4.99K
R42
4.02K
C17
560pF
C18
4.7uF/6.3V
+1.8V
U10
C26
22uF/6.3V
R53
R51
10K
R57
20K
C27
560pF
C28
4.7uF/6.3V
+1.2V