VULCAN OMNIPRO™ 220 QUICK START GUIDE

57812

1 Connect cables as needed for flux wire welding - see back of guide.

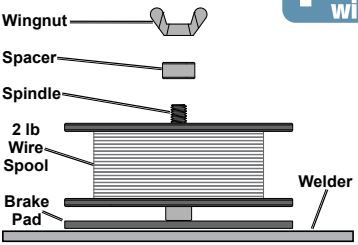

2 lb Spool Loading
Adapter and knob required for 10-12 lb spool

2 Install wire spool. Insert wire through both feed guides and clamp it into feed mechanism. See manual if changing wire size or using solid wire.

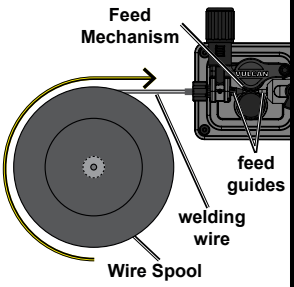

⚠WARNING

To prevent serious injury, read manual warnings and instructions before use.

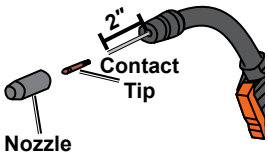

3 Take off nozzle and tip, plug selected cord into welder and into wall, turn welder on, and press cold wire feed switch until wire comes out.

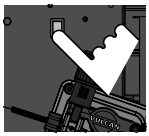

⚠WARNING

To prevent fire and serious injury, keep torch and wire clear of grounded objects while welder plugged in.

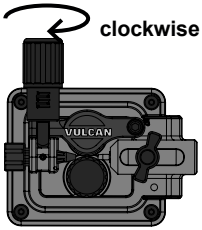

4 Incrementally tighten wire feed tension knob clockwise until wire will bend from feed tension at 2"-3".

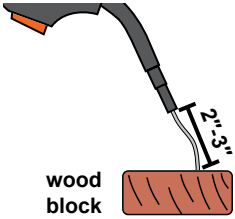

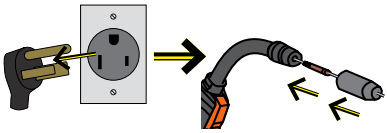

5 Unplug welder and replace nozzle and tip.

6 Hold gun clear of workpiece, then plug in welder, turn it on, and set weld thickness and other settings.

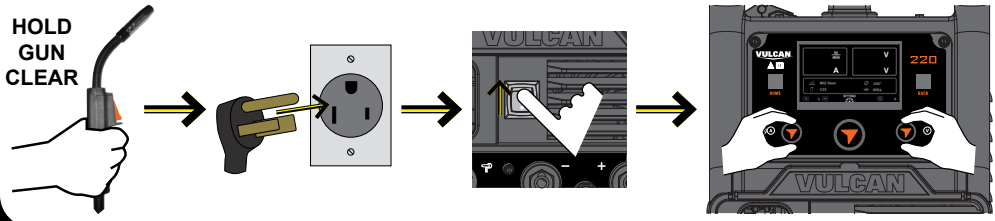

BASIC WELDING INSTRUCTIONS AND WELDING TIPS ARE IN MANUAL.

VULCAN OMNIPRO™ 220 QUICK START GUIDE

57812

STICK CABLE SETUP

1. Connect ground clamp to negative terminal.
2. Connect electrode holder to positive terminal.
3. Leave wire feed power disconnected.

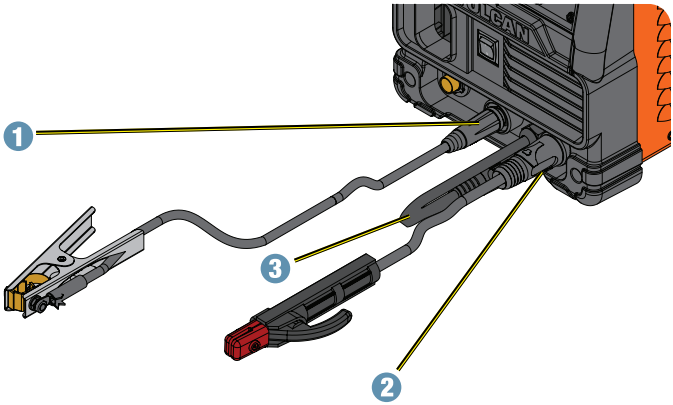

MIG CABLE SETUP

1. Connect ground clamp to negative terminal.
2. Connect wire feed power to positive terminal.
3. Connect MIG gun to wire feed.
4. Connect wire feed control inside welder.

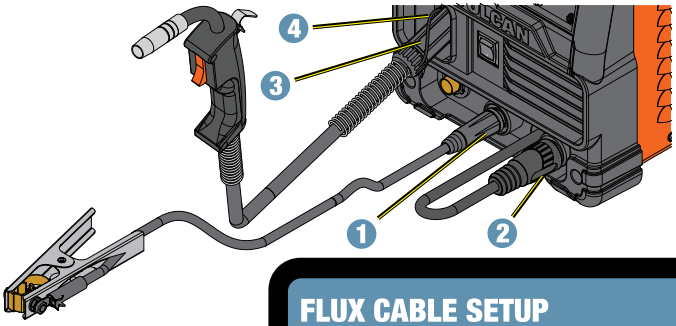

FLUX CABLE SETUP

Follow MIG cable setup but connect ground clamp to positive terminal and wire feed power to negative terminal.

TIG CABLE SETUP

1. Connect ground clamp to positive terminal.
2. Connect TIG torch to negative terminal.
3. Connect gas line to gas regulator.
4. Connect foot pedal inside welder.
5. Leave wire feed power disconnected.

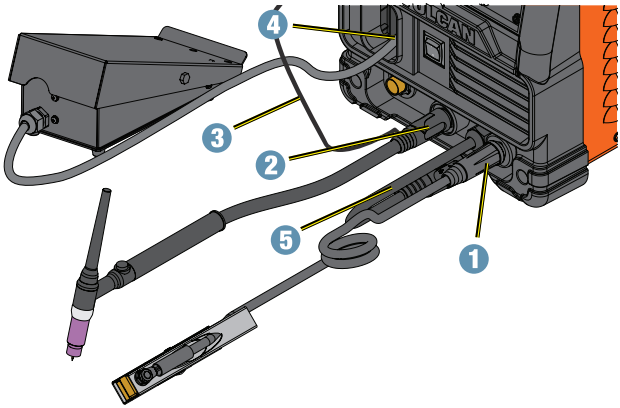

BASIC WELDING INSTRUCTIONS AND WELDING TIPS ARE IN MANUAL.