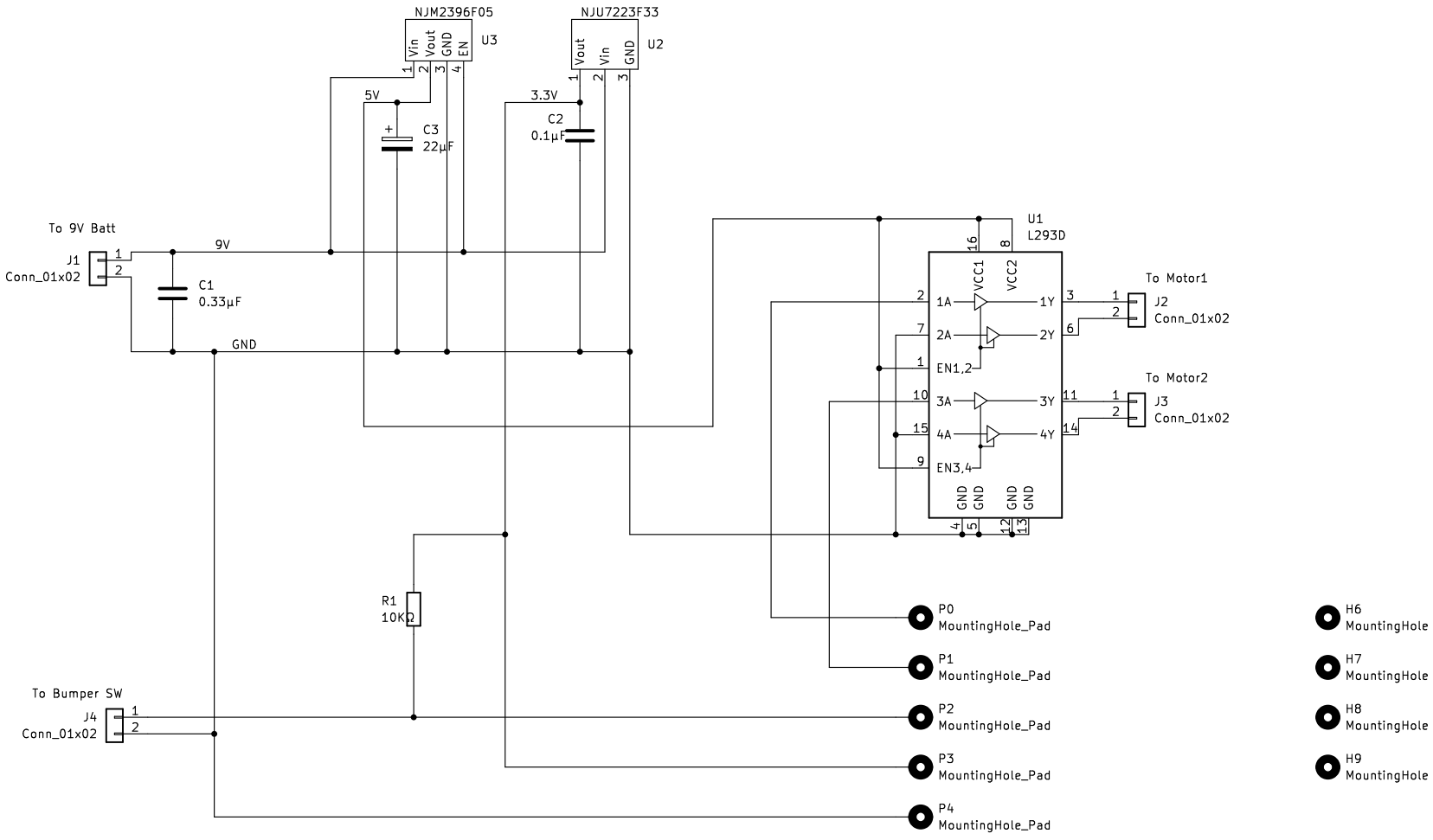

Sheet: /
File: MB_Curling.kicad_sch

Title: micro:bit curling robot

Size: A4	Date: 2024-01-21	**Rev: 0.2**
KiCad E.D.A. kicad 7.0.9		Id: 1/1