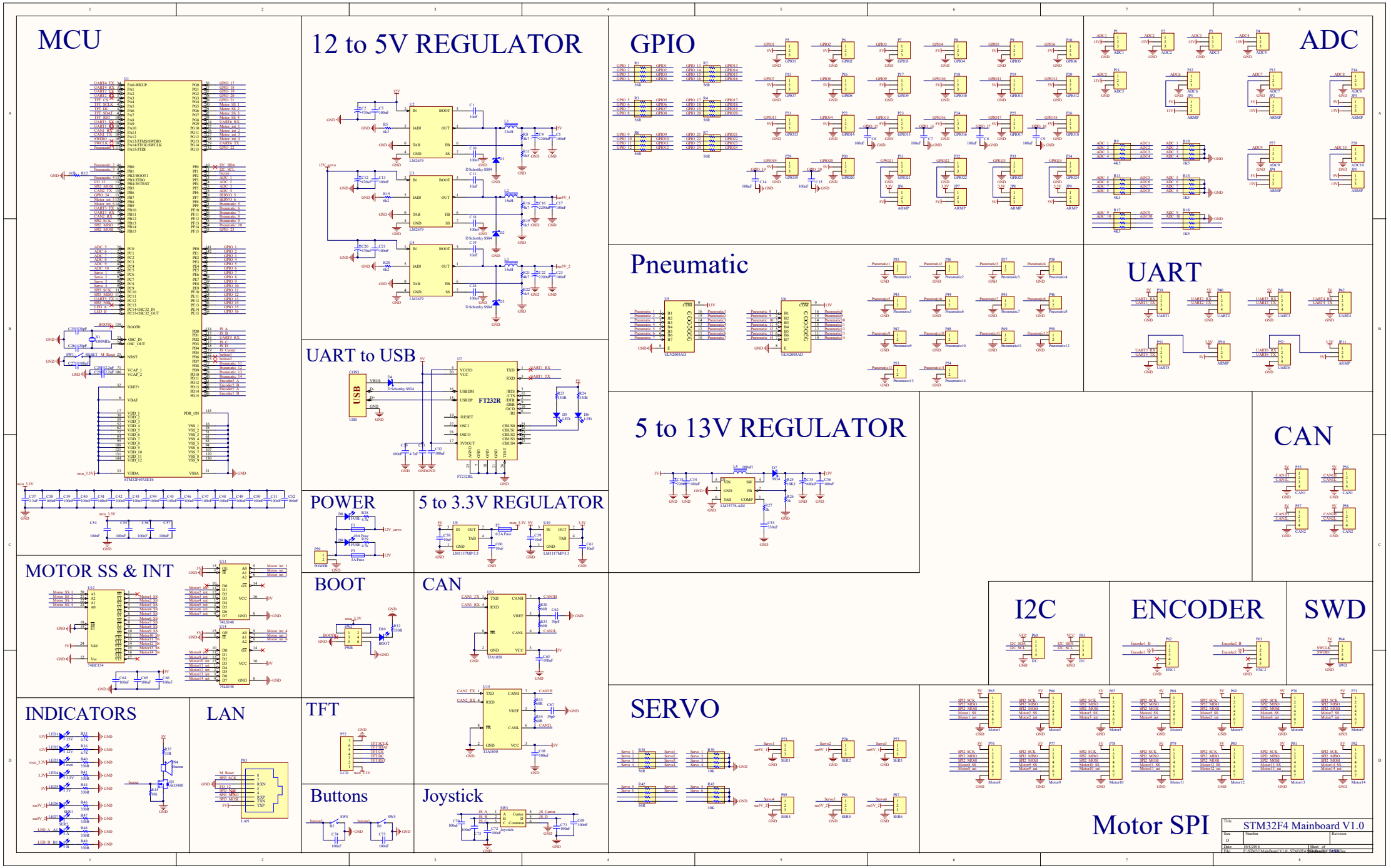
MCU
12 to 5V REGULATOR
GPIO
ADC
Pneumatic
UART
UART to USB
5 to 13V REGULATOR
CAN
POWER
5 to 3.3V REGULATOR
MOTOR SS & INT
BOOT
CAN
I2C
ENCODER
SWD
INDICATORS
LAN
TFT
Buttons
Joystick
SERVO
Motor SPI
STM32F4 Mainboard V1.0