NTIRE 2023 Efficient SR Challenge Solution
Diversified Local Feature Arch-Network for Efficient Super-Resolution

Mingyu Ouyang* Wenzhuo Ma* Nian Liu* Hanyou Zheng*
Yuantong Zhang Junxi Zhang Zhenzhong Chen†
Wuhan University
{yyyang404, mwzgorgeous, n1koliu, zhenghanyou,
yuantongzhang, sissie_zhang, zzchen}@whu.edu.cn

1. Team details

- Team name
  Sissie_Lab
- Team leader name
  Mingyu Ouyang
- Team leader address, phone number, and email Address: Wuhan University, China
  Phone: +86 19925949037
  email: yyyang404@whu.edu.cn
- Rest of the team members
  Mingyu Ouyang
  Wenzhuo Ma
  Nian Liu
  Hanyou Zheng
  Yuantong Zhang
  Junxi Zhang
  Zhenzhong Chen
- Affiliation
  Wuhan University
- Link to the codes/executables of the solution(s)
  https://github.com/N1koLiu/NTIRE2023_ESR

1.1. Method details

- **General method description**

  We propose Diversified Local Feature Arch-Network (DLFAN) for the efficient super-resolution task [4]. The architecture of our model is shown in Fig.1. The proposed DLFAN is modified upon the general backbone of the previous work RLFN [3]. The main improvement of our approach is on two aspects. Firstly, DLFAN uses an archway-shaped connection to merge the shallow features in recovering stage. It does greatly help to stabilize training procedures and performance. Secondly, we enhance all the convolution layers in RLFB by using the re-parameterization method to extract diversified features.

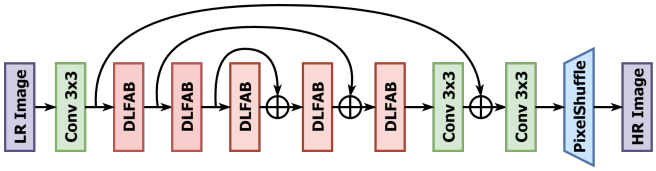

Figure 1. The overall network framework of Diversified Local Feature Arch-Network(DLFAN).

- **Building Blocks**

  A variant of Diversified Local Feature Block(DLFB) is designed based on the RLFB. Inspired by re-parameterizable works ECB [5] and DBB [1], we use a re-parameterizable and Learnable Enhanced Diverse Branch Block(LEDBB) to replace the original 3×3 convolutional layers in RLFB. Specifically, the LEDBB inside DLFB introduces diverse branches of convolution to extract different textures and edges during training. As shown in Fig.2, there are two additional branches along with the original 3×3 convolution, which consists of a 1×1 convolution and two cascaded convolutions with sizes of 1×1 and 3×3, respectively. Besides, we add batch normalization after each convolutional layer to bring training-time nonlinearity.

- **Training strategy**

  The training strategies contain two stages: the training stage and fine-tuning stage.

  Training stage. In each training batch, 64 HR color patches with the size of 256×256 are randomly

*Equal contribution
†corresponding author

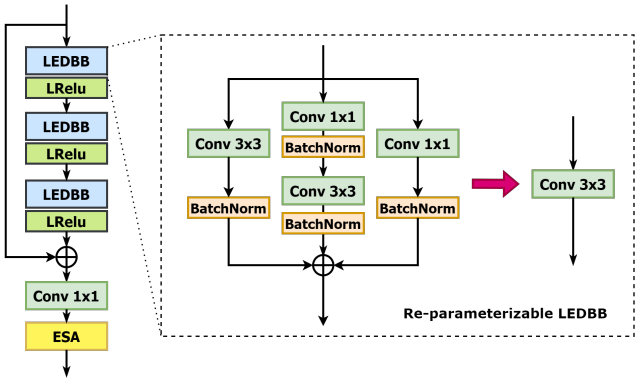

Figure 2. Re-parameterization of Learnable Enhanced Diverse Branch Block (LEDBB).

cropped from HR images. The model is trained by minimizing $L1$ loss function with Adam optimizer. The initial learning rate is set to 5×10^{-4} with cosine decaying to 1×10^{-5}. The total epoch in the training stage is 5000.

Fine-tuning stage. The HR patch size is progressively increased from 512×512 to 840×840 to improve the performance. The batch size is set as 32 and 16, respectively. We use $L2$ loss as the loss function in this stage. The learning rate decays from 5×10^{-5} to 1×10^{-6}. The total epoch in the fine-tuning stage is 3000.

We use DIV2K and Flickr2K as the training datasets. Data augmentation methods, including random rotation and horizontal and vertical flipping, are applied during our training. The model is trained by ADAM optimizer [2] with default settings. The model is implemented by Pytorch 1.13.1 and trained with 2 NVIDIA GeForce RTX 3090 GPUs.

- **Experimental results**

Method	Val. PSNR	Tes. PSNR	Param.(M)	FLOPs(G)
DLFAN	29.00	27.00	0.4612	28.8538

Table 1. Experimental results of our DLFAN.

References

[1] Xiaohan Ding, Xiangyu Zhang, Jungong Han, and Guiguang Ding. Diverse branch block: Building a convolution as an inception-like unit. In *2021 IEEE/CVF Conference on Computer Vision and Pattern Recognition (CVPR)*, pages 10881–10890, 2021. 1

[2] Diederik P. Kingma and Jimmy Ba. Adam: A method for stochastic optimization. In Yoshua Bengio and Yann LeCun, editors, *3rd International Conference on Learning Representations, ICLR 2015, San Diego, CA, USA, May 7-9, 2015, Conference Track Proceedings*, 2015. 2

[3] F. Kong, Mingxi Li, Songwei Liu, Ding Liu, Jingwen He, Yang Bai, Fangmin Chen, and Lean Fu. Residual local feature network for efficient super-resolution. *2022 IEEE/CVF Conference on Computer Vision and Pattern Recognition Workshops (CVPRW)*, pages 765–775, 2022. 1

[4] Yawei Li, Kai Zhang, Radu Timofte, Luc Van Gool, Fangyuan Kong, Mingxi Li, Songwei Liu, Zongcai Du, Ding Liu, Chenhui Zhou, Jingyi Chen, Qingrui Han, Zheyuan Li, Yingqi Liu, Xiangyu Chen, Haoming Cai, Yu Qiao, Chao Dong, Long Sun, Jinshan Pan, Yi Zhu, Zhikai Zong, Xiaoxiao Liu, Zheng Hui, Tao Yang, Peiran Ren, Xuansong Xie, Xian-Sheng Hua, Yanbo Wang, Xiaozhong Ji, Chuming Lin, Donghao Luo, Ying Tai, Chengjie Wang, Zhizhong Zhang, Yuan Xie, Shen Cheng, Ziwei Luo, Lei Yu, Zhihong Wen, Qi Wul, Youwei Li, Haoqiang Fan, Jian Sun, Shuaicheng Liu, Yuanfei Huang, Meiguang Jin, Hua Huang, Jing Liu, Xinjian Zhang, Yan Wang, Lingshun Long, Gen Li, Yuanfan Zhang, Zuowei Cao, Lei Sun, Panaetov Alexander, Yucong Wang, Minjie Cai, Li Wang, Lu Tian, Zheyuan Wang, Hongbing Ma, Jie Liu, Chao Chen, Yidong Cai, Jie Tang, Gangshan Wu, Weiran Wang, Shirui Huang, Honglei Lu, Huan Liu, Keyan Wang, Jun Chen, Shi Chen, Yuchun Miao, Zimo Huang, Lefei Zhang, Mustafa Ayazoğlu, Wei Xiong, Chengyi Xiong, Fei Wang, Hao Li, Ruimian Wen, Zhijing Yang, Wenbin Zou, Weixin Zheng, Tian Ye, Yuncheng Zhang, Xiangzhen Kong, Aditya Arora, Syed Waqas Zamir, Salman Khan, Munawar Hayat, Fahad Shahbaz Khan, Dandan Gao, Dengwen Zhou, Qian Ning, Jingzhu Tang, Han Huang, Yufei Wang, Zhangheng Peng, Haobo Li, Wenxue Guan, Shenghua Gong, Xin Li, Jun Liu, Wanjun Wang, Dengwen Zhou, Kun Zeng, Hanjiang Lin, Xinyu Chen, and Jinsheng Fang. Ntire 2022 challenge on efficient super-resolution: Methods and results. In *2022 IEEE/CVF Conference on Computer Vision and Pattern Recognition Workshops (CVPRW)*, pages 1061–1101, 2022. 1

[5] Xindong Zhang, Huiyu Zeng, and Lei Zhang. Edge-oriented convolution block for real-time super resolution on mobile devices. *Proceedings of the 29th ACM International Conference on Multimedia*, 2021. 1