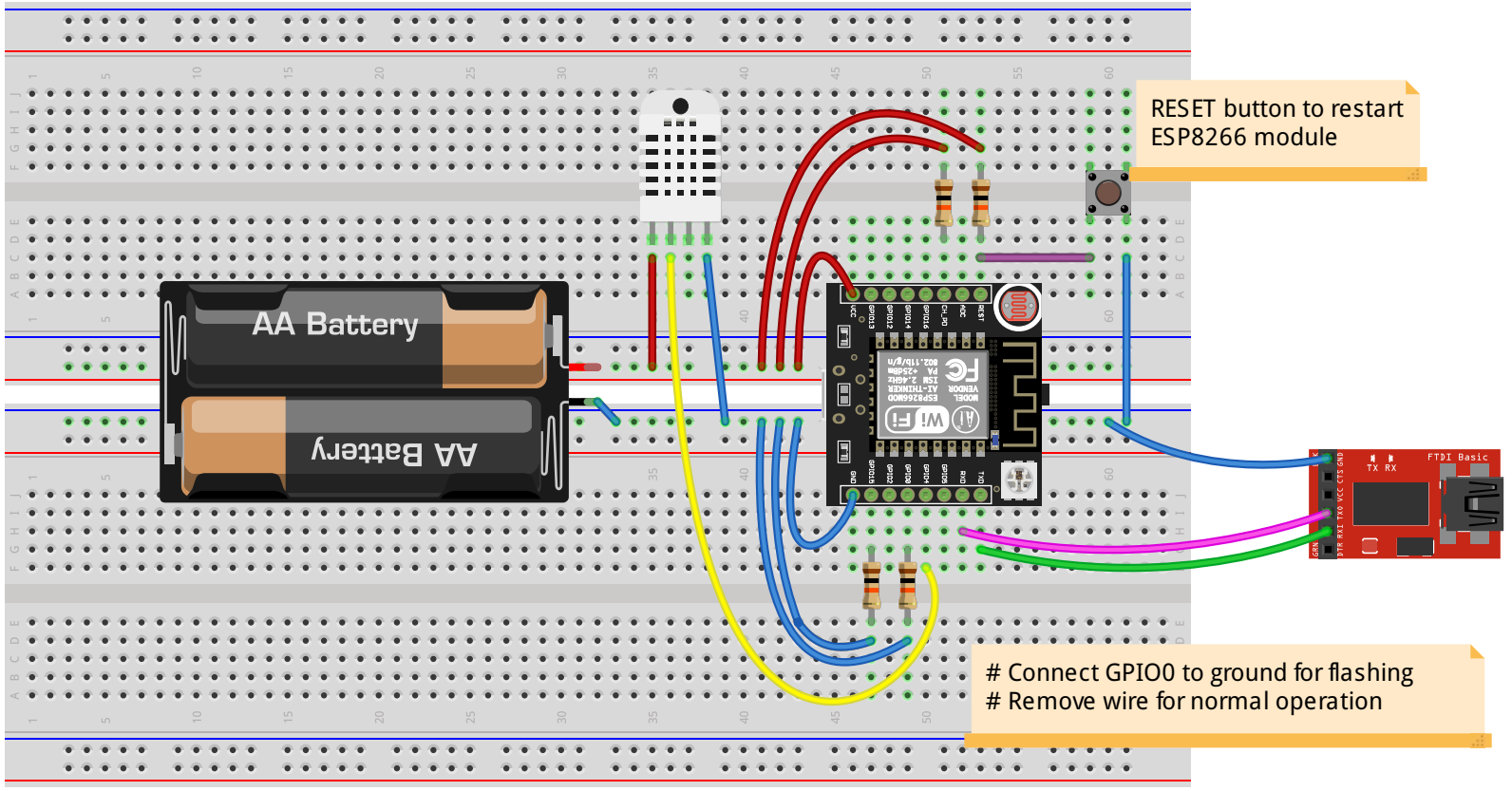
RESET button to restart
ESP8266 module
AA Battery
AA Battery
FTDI Basic
Connect GPIO0 to ground for flashing
Remove wire for normal operation
fritzing