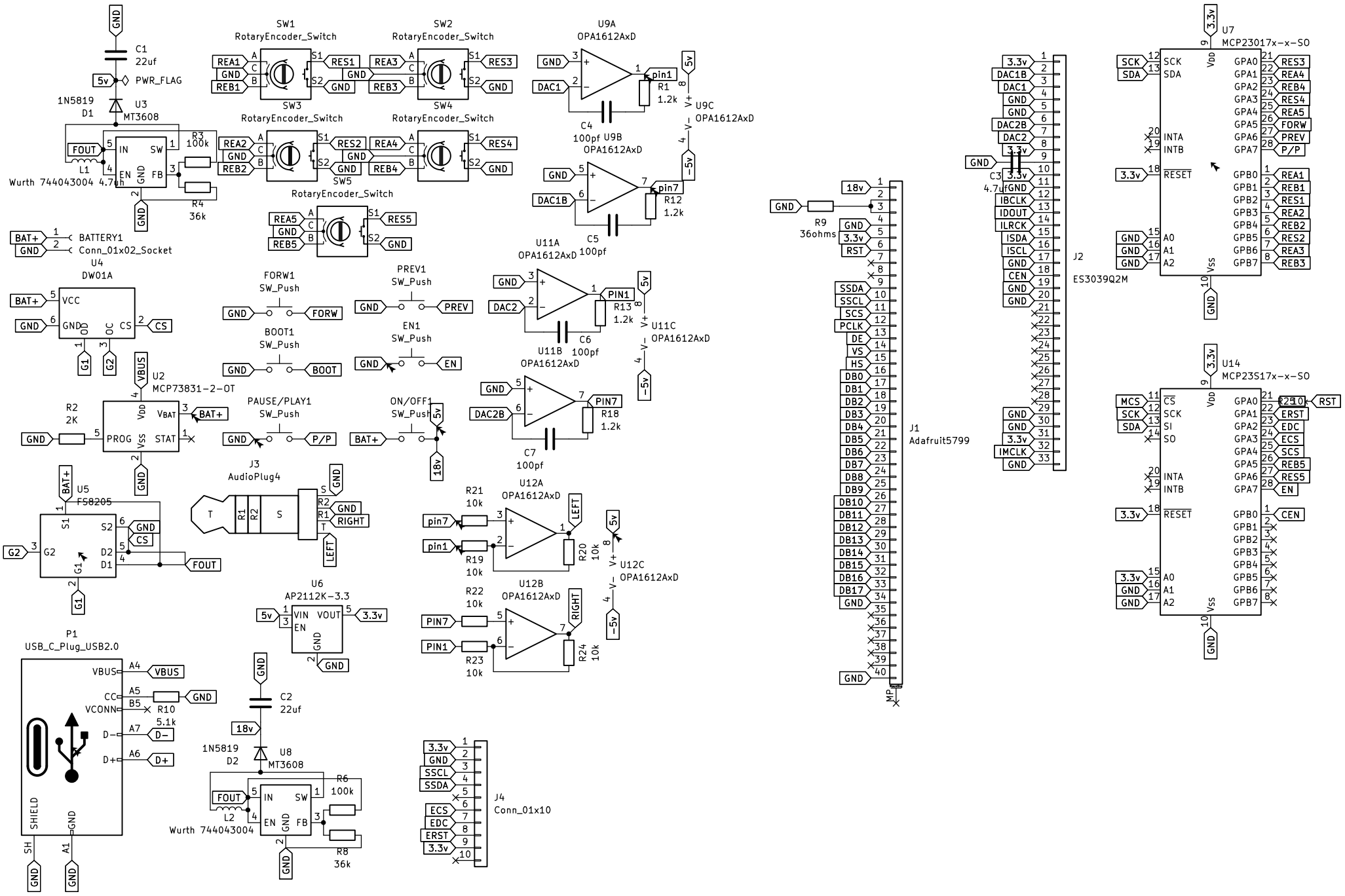
GND
C1
22uf
5v
PWR_FLAG
1N5819
D1
U3
MT3608
FOUT
IN
SW
EN
GND
FB
L1
Wurth 744043004 4.7uh
R3
100k
R4
36k
BAT+
BATTERY1
Conn_01x02_Socket
U4
DW01A
VCC
OD
OC
CS
G1
G2
VBUS
U2
MCP73831-2-OT
VDD
VBAT
PROG
VSS
STAT
R2
2K
U5
FS8205
S1
S2
D2
D1
SW1
RotaryEncoder_Switch
REA1
REB1
RES1
SW2
REA3
REB3
RES3
SW3
REA2
REB2
RES2
SW4
REA4
REB4
RES4
SW5
REA5
REB5
RES5
FORW1
SW_Push
FORW
BOOT1
BOOT
PREV1
PREV
EN1
EN
PAUSE/PLAY1
P/P
ON/OFF1
18v
J3
AudioPlug4
T
R1
R2
S
RIGHT
LEFT
U6
AP2112K-3.3
VIN
VOUT
3.3v
P1
USB_C_Plug_USB2.0
VBUS
CC
VCONN
D-
D+
SHIELD
SH
A4
A5
B5
A7
A6
A1
R10
5.1k
C2
22uf
1N5819
D2
U8
MT3608
L2
Wurth 744043004
R6
100k
R8
36k
U9A
OPA1612AxD
DAC1
pin1
R1
1.2k
U9C
OPA1612AxD
C4
100pf
U9B
OPA1612AxD
DAC1B
pin7
R12
1.2k
C5
100pf
U11A
OPA1612AxD
DAC2
PIN1
R13
1.2k
U11C
OPA1612AxD
C6
100pf
U11B
OPA1612AxD
DAC2B
PIN7
R18
1.2k
C7
100pf
U12A
OPA1612AxD
R21
10k
R19
10k
R20
10k
U12C
OPA1612AxD
U12B
OPA1612AxD
R22
10k
R23
10k
R24
10k
J4
Conn_01x10
ECS
EDC
ERST
SSCL
SSDA
R9
36ohms
J1
Adafruit5799
DAC1B
DAC2
DAC2B
IBCLK
IDOUT
ILRCK
ISDA
ISCL
CEN
IMCLK
DE
VS
HS
DB0
DB1
DB2
DB3
DB4
DB5
DB6
DB7
DB8
DB9
DB10
DB11
DB12
DB13
DB14
DB15
DB16
DB17
MP
J2
ES3039Q2M
C3
4.7uf
U7
MCP23017x-x-SO
SCK
SDA
INTA
INTB
RESET
A0
A1
A2
GPA0
GPA1
GPA2
GPA3
GPA4
GPA5
GPA6
GPA7
GPB0
GPB1
GPB2
GPB3
GPB4
GPB5
GPB6
GPB7
FORW
P/P
REA1
REB1
RES1
REA2
REB2
RES2
REA3
REB3
RES3
REA4
REB4
RES4
REA5
REB5
RES5
U14
MCP23S17x-x-SO
MCS
CS
SI
SO
RST
ERST
EDC
ECS
SCS
REB5
RES5
EN
CEN

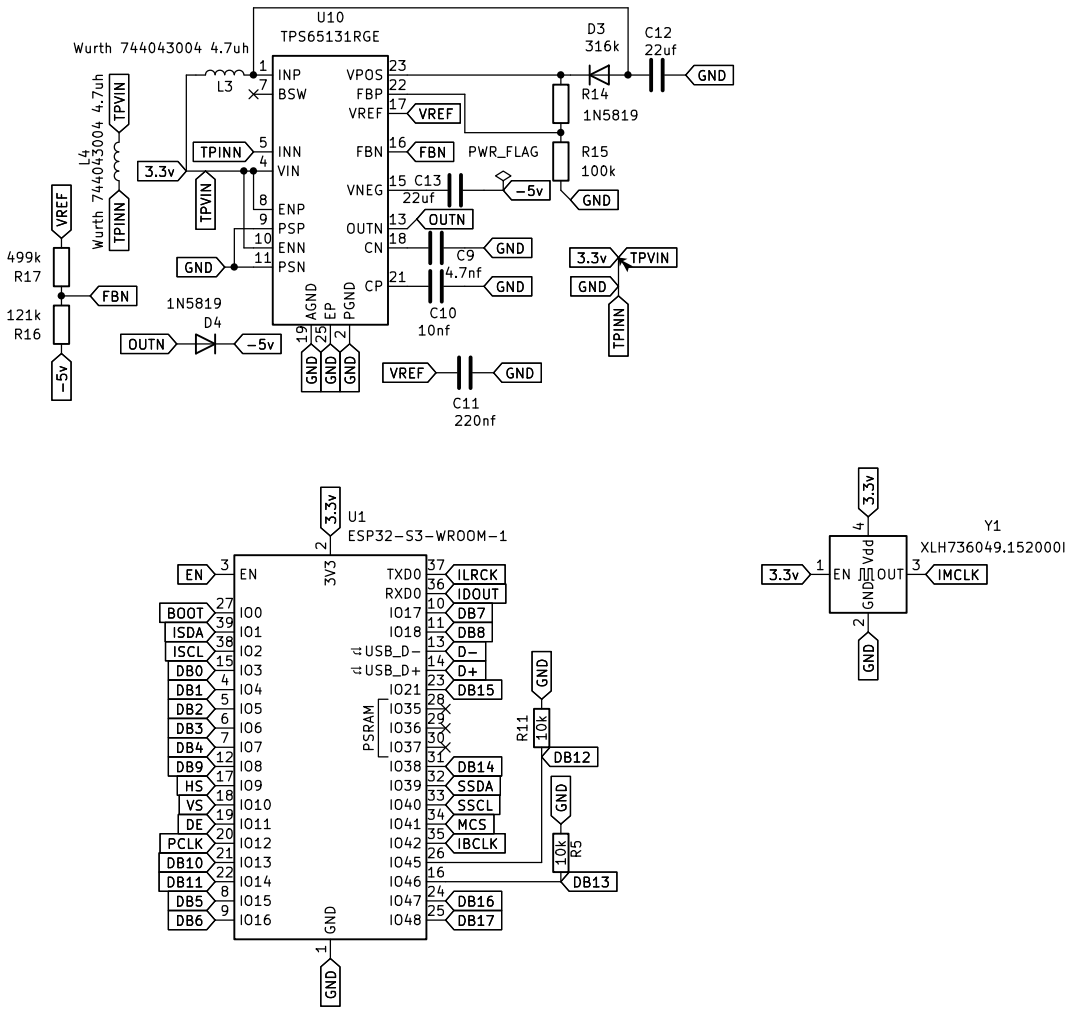
U10
TPS65131RGE
Wurth 744043004 4.7uh
L3
L4
Wurth 744043004 4.7uh
INP
BSW
INN
VIN
ENP
PSP
ENN
PSN
AGND
EP
PGND
VPOS
FBP
VREF
FBN
VNEG
OUTN
CN
CP
D3
316k
C12
22uf
R14
1N5819
R15
100k
PWR_FLAG
C13
22uf
C9
4.7nf
C10
10nf
C11
220nf
499k
R17
121k
R16
1N5819
D4
U1
ESP32-S3-WROOM-1
3V3
EN
IO0
IO1
IO2
IO3
IO4
IO5
IO6
IO7
IO8
IO9
IO10
IO11
IO12
IO13
IO14
IO15
IO16
TXD0
RXD0
IO17
IO18
USB_D-
USB_D+
IO21
IO35
IO36
IO37
IO38
IO39
IO40
IO41
IO42
IO45
IO46
IO47
IO48
PSRAM
R11
10k
R5
10k
Y1
XLH736049.152000I
Vdd
GND
OUT
IMCLK