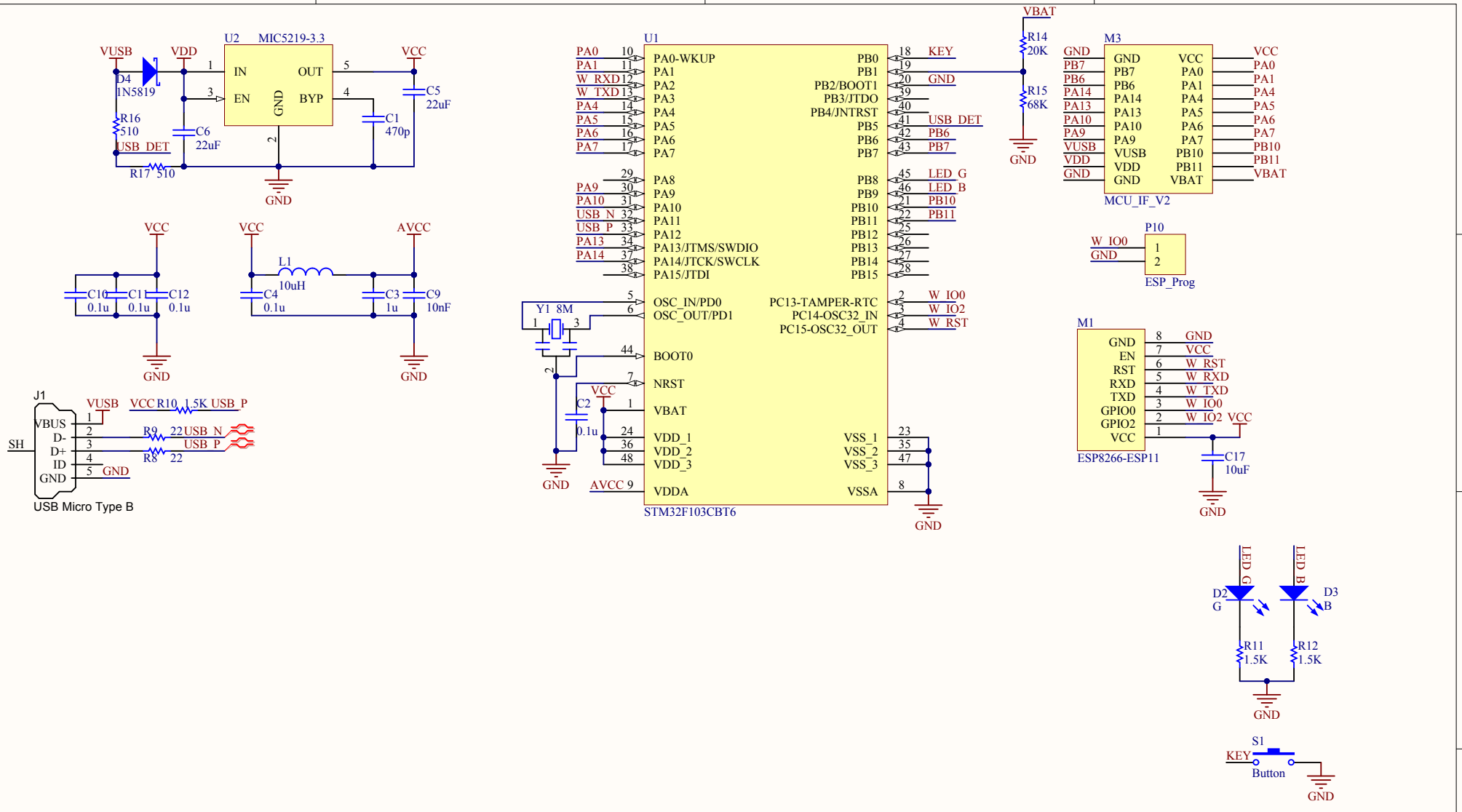

Title		
Size A4	Number	Revision
Date: 2015-4-12		Sheet of
File: Z:\Projects\..\MCU.SchDoc		Drawn By:

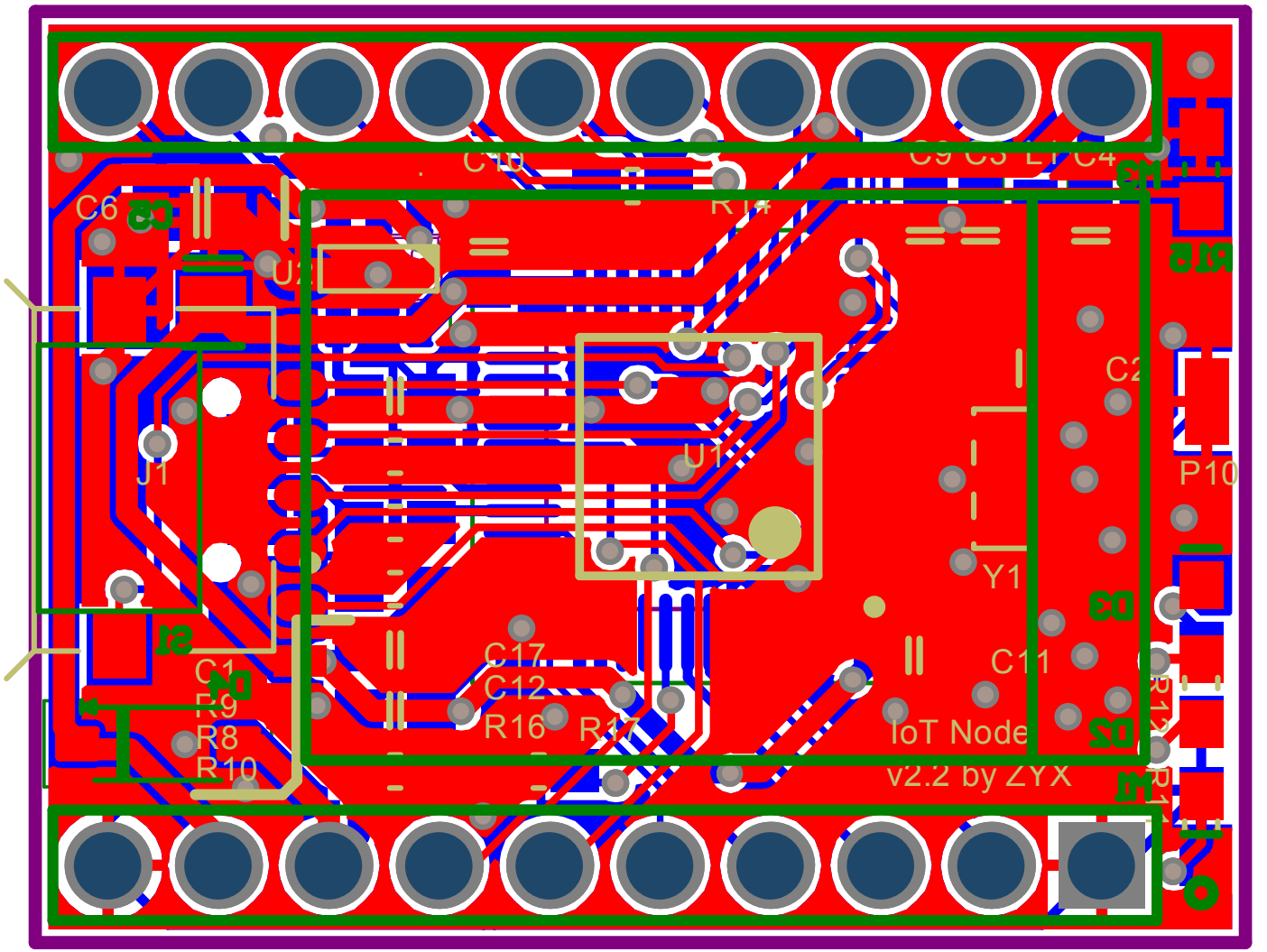
C6
C10
R14
C9
C3
L1
C4
U2
U1
C2
P10
J1
Y1
C1
C17
C12
R9
R8
R10
R16
R17
C11
IoT Node
v2.2 by ZYX