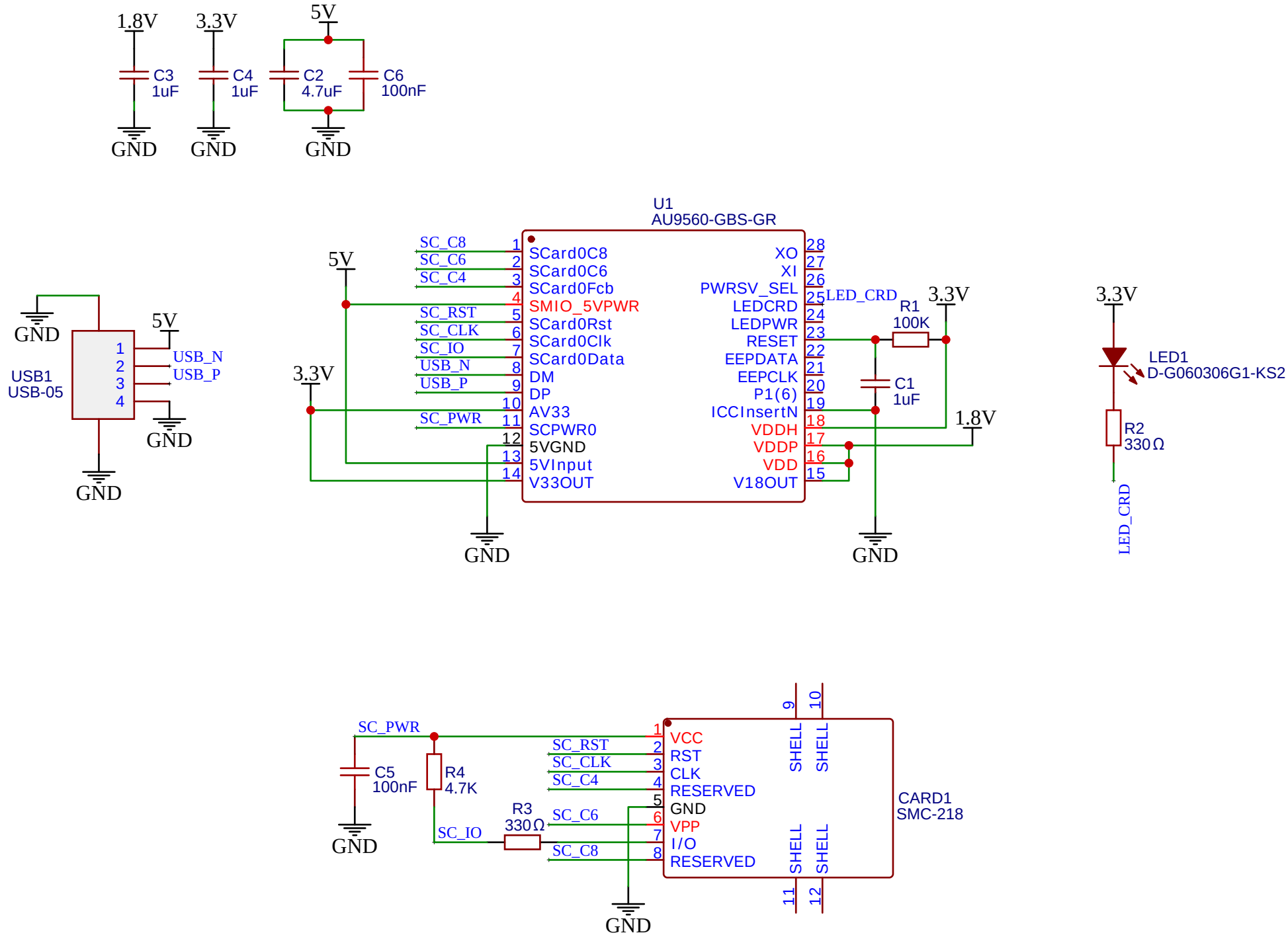
1.8V
3.3V
5V
C3
1uF
C4
1uF
C2
4.7uF
C6
100nF
GND
GND
GND
U1
AU9560-GBS-GR
SC_C8
SC_C6
SC_C4
SC_RST
SC_CLK
SC_IO
USB_N
USB_P
SC_PWR
SCard0C8
SCard0C6
SCard0Fcb
SMIO_5VPWR
SCard0Rst
SCard0Clk
SCard0Data
DM
DP
AV33
SCPWR0
5VGND
5VInput
V33OUT
XO
XI
PWRSV_SEL
LEDCRD
LEDPWR
RESET
EEPDATA
EEPCLK
P1(6)
ICCInsertN
VDDH
VDDP
VDD
V18OUT
LED_CRD
R1
100K
C1
1uF
1.8V
USB1
USB-05
LED1
D-G060306G1-KS2
R2
330Ω
LED_CRD
SC_PWR
C5
100nF
R4
4.7K
SC_IO
R3
330Ω
SC_RST
SC_CLK
SC_C4
SC_C6
SC_C8
VCC
RST
CLK
RESERVED
GND
VPP
I/O
RESERVED
SHELL
CARD1
SMC-218