SWITCH_SENSE: +12V when car switch is open, ground/low-voltage/floating otherwise

SEAT_SENSE: Vdd when child in seat, floating otherwise

$\overline{\text{LIGHT}}$: Open-drain when SEAT_SENSE is on

$\overline{\text{ALARM}}$: When SEAT_SENSE is on and SWITCH_SENSE is off (open-drain)

$\overline{\text{ACTION}}$: Open windows, sound horn etc. (open-drain)

Delay Selector: Selects delay (on/off) using a jumper

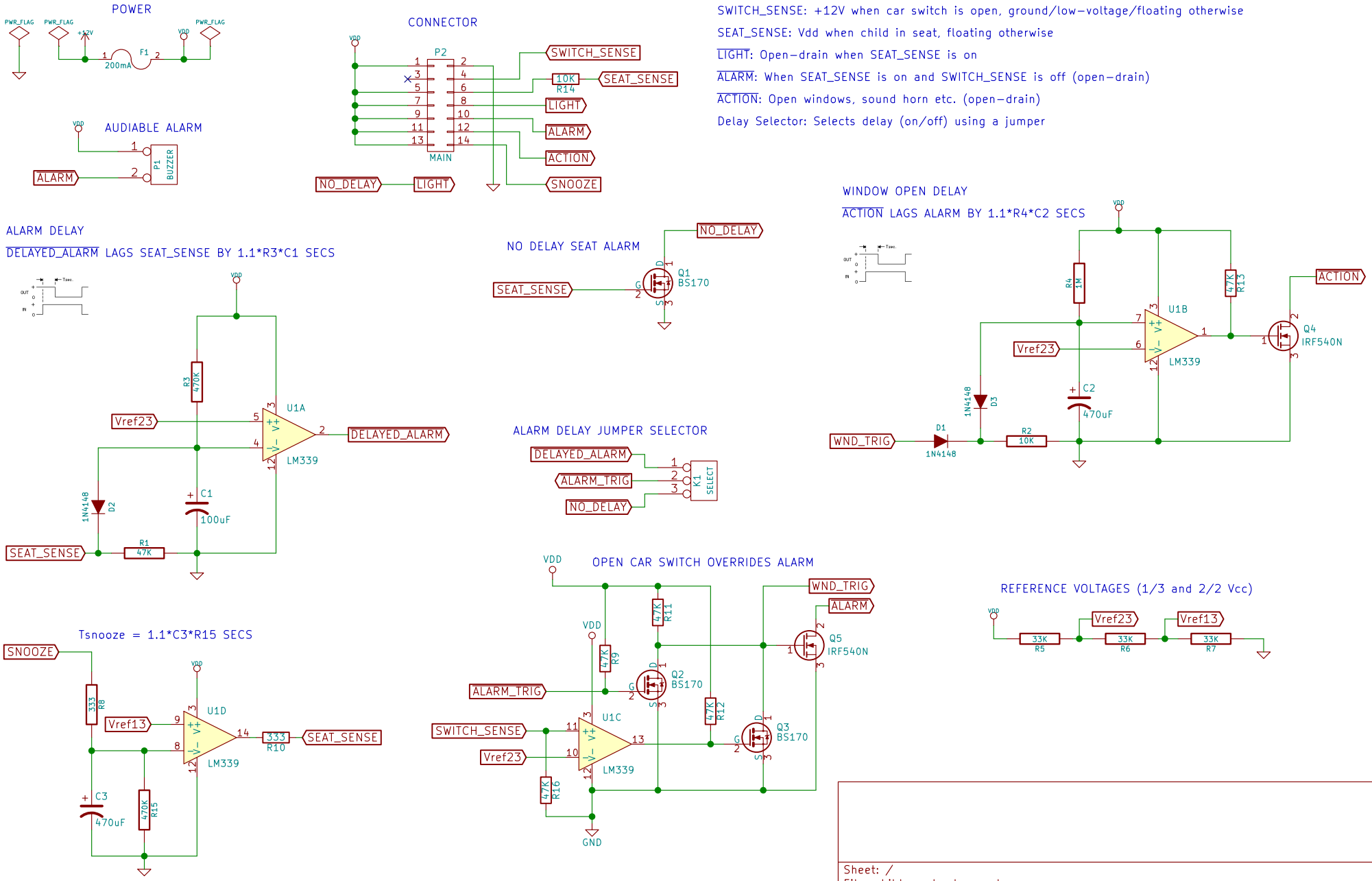

Sheet: /
File: child-seat-alarm.sch

Title: Child Seat Alarm

Size: A4	Date: 19 jul 2016	Rev: 1
KiCad E.D.A. kicad 4.0.2+dfsg1-2bpo8+1-stable		Id: 1/1