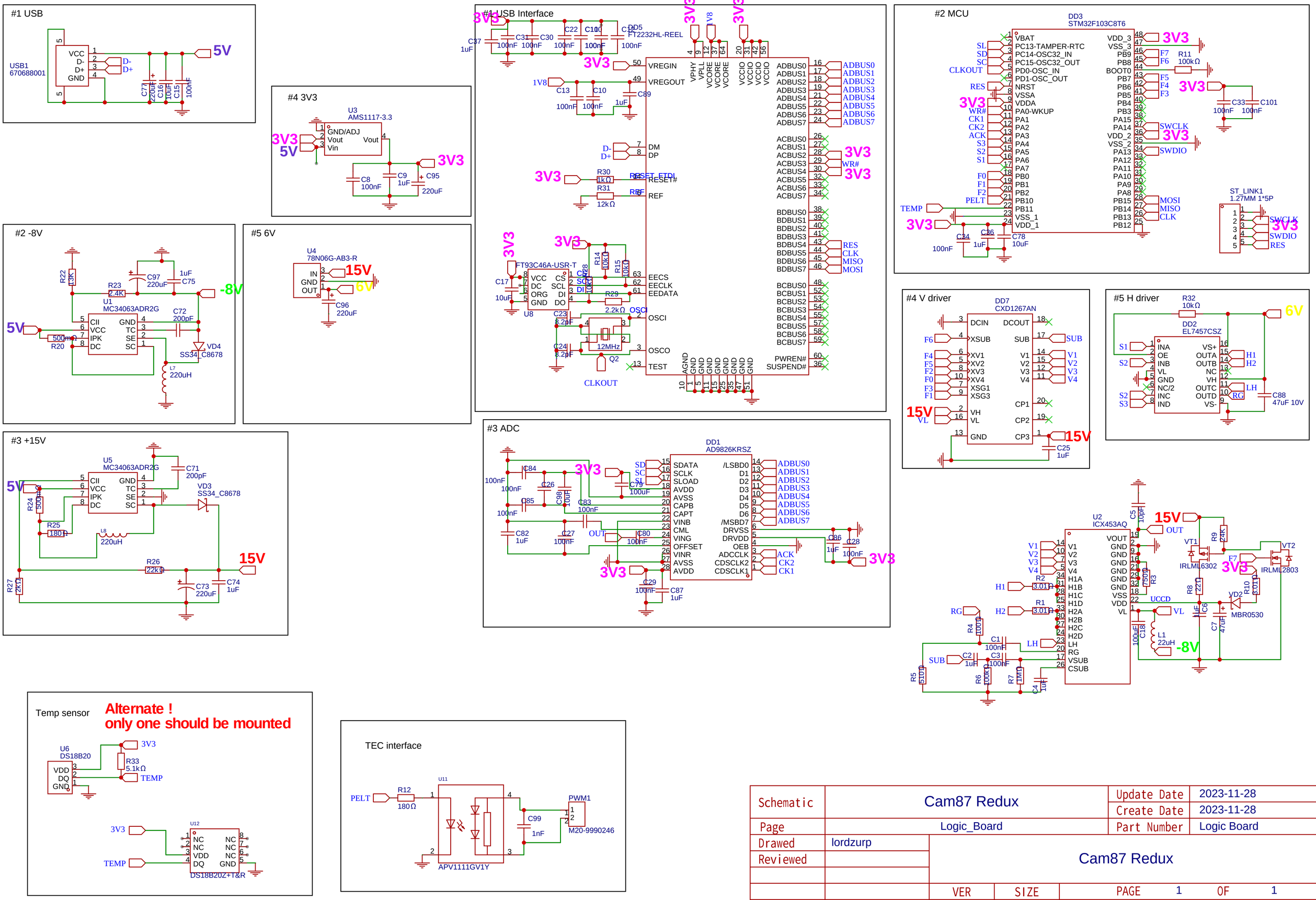

Schematic	Cam87 Redux	Update Date	2023-11-28
		Create Date	2023-11-28
Page	Logic_Board	Part Number	Logic Board
Drawed	lordzurp	Cam87 Redux	
Reviewed			
		VER	SIZE
		V1.1	A3
		PAGE 1 OF 1	
EasyEDA		zUrp Astronomics	