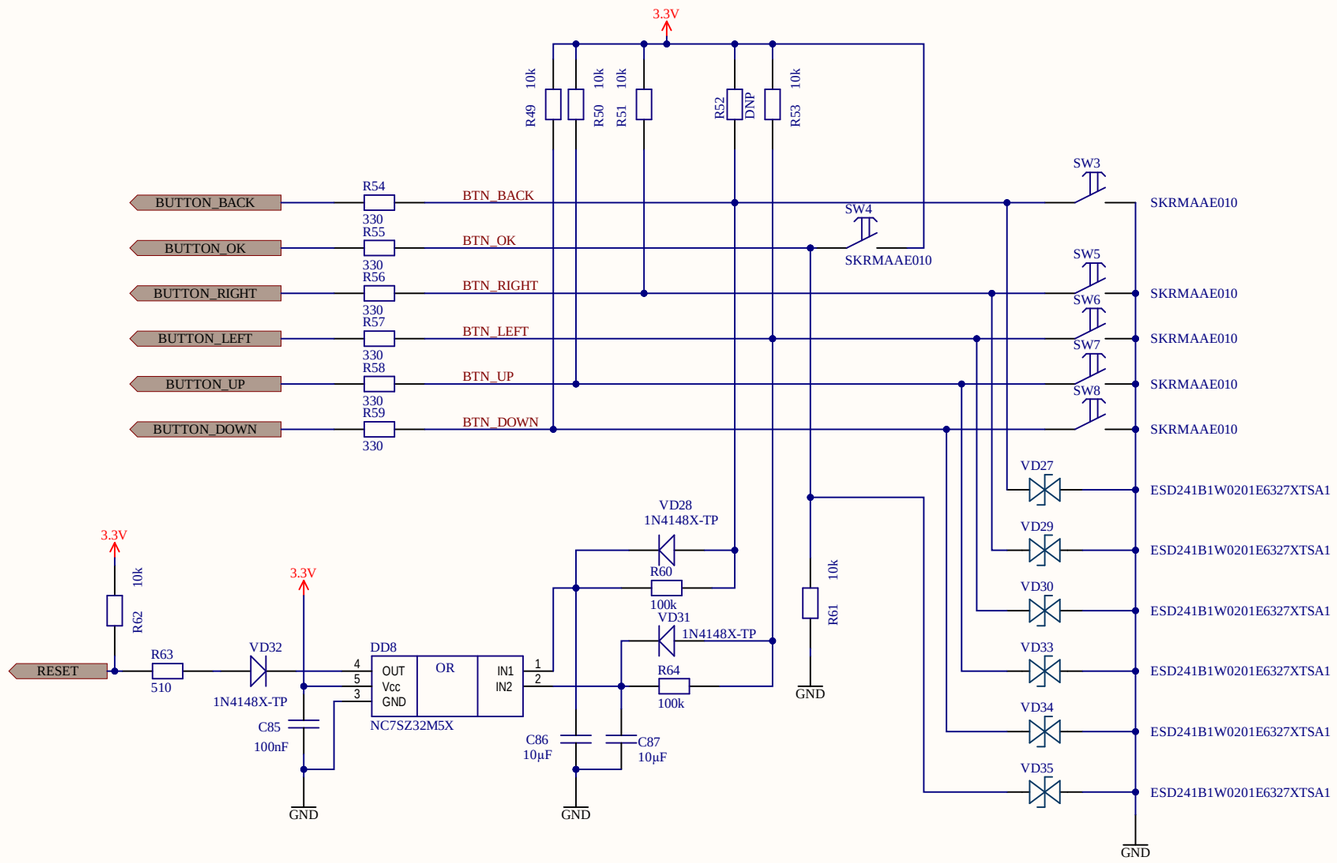

フリッパーデバイス

Title:			*Flipper Devices Inc.* *2803 Philadelphia Pike Suite B #551* *Claymont, DE* *19703, USA*
Project:		Rev.:	
Date: 8/3/2022	Size: A3	Sheet 7 of 7	