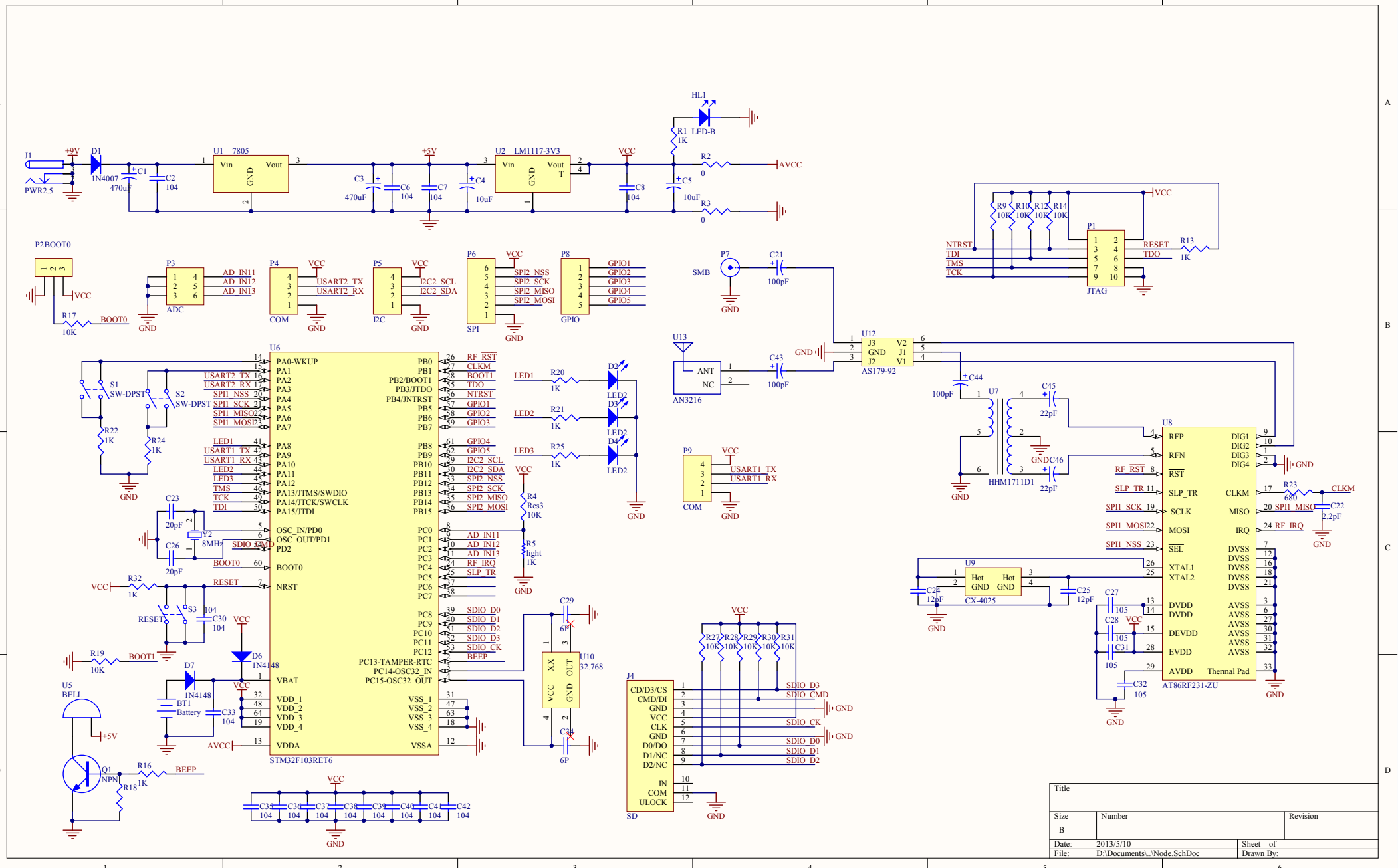
J1
PWR2.5
+9V
D1
1N4007
C1
470uF
C2
104
U1 7805
Vin
Vout
GND
+5V
C3
470uF
C6
104
C7
104
C4
10uF
U2 LM1117-3V3
Vin
Vout
GND
T
VCC
C8
104
C5
10uF
HL1
LED-B
R1
1K
R2
0
AVCC
R3
0
P2BOOT0
VCC
R17
10K
BOOT0
P3
ADC
AD_IN11
AD_IN12
AD_IN13
P4
COM
VCC
USART2_TX
USART2_RX
P5
I2C
VCC
I2C2_SCL
I2C2_SDA
P6
SPI
VCC
SPI2_NSS
SPI2_SCK
SPI2_MISO
SPI2_MOSI
P8
GPIO
GPIO1
GPIO2
GPIO3
GPIO4
GPIO5
GND
P7
SMB
C21
100pF
U13
ANT
NC
AN3216
C43
100pF
U12
J3
GND
J2
V2
J1
V1
AS179-92
C44
100pF
U7
HHM1711D1
C45
22pF
C46
22pF
P1
JTAG
NTRST
TDI
TMS
TCK
R9
R10
R12
R14
10K
RESET
TDO
R13
1K
U6
STM32F103RET6
PA0-WKUP
PA1
PA2
PA3
PA4
PA5
PA6
PA7
PA8
PA9
PA10
PA11
PA12
PA13/JTMS/SWDIO
PA14/JTCK/SWCLK
PA15/JTDI
OSC_IN/PD0
OSC_OUT/PD1
PD2
BOOT0
NRST
VBAT
VDD_1
VDD_2
VDD_3
VDD_4
VDDA
PB0
PB1
PB2/BOOT1
PB3/JTDO
PB4/JNTRST
PB5
PB6
PB7
PB8
PB9
PB10
PB11
PB12
PB13
PB14
PB15
PC0
PC1
PC2
PC3
PC4
PC5
PC6
PC7
PC8
PC9
PC10
PC11
PC12
PC13-TAMPER-RTC
PC14-OSC32_IN
PC15-OSC32_OUT
VSS_1
VSS_2
VSS_3
VSS_4
VSSA
RF_RST
CLKM
BOOT1
TDO
NTRST
GPIO1
GPIO2
GPIO3
GPIO4
GPIO5
I2C2_SCL
I2C2_SDA
SPI2_NSS
SPI2_SCK
SPI2_MISO
SPI2_MOSI
AD_IN11
AD_IN12
AD_IN13
RF_IRQ
SLP_TR
SDIO_D0
SDIO_D1
SDIO_D2
SDIO_D3
SDIO_CK
BEEP
S1
SW-DPST
S2
SW-DPST
R22
1K
R24
1K
LED1
LED2
LED3
R20
1K
R21
1K
R25
1K
D2
D3
D4
LED2
R4
Res3
10K
R5
light
1K
C23
20pF
C26
20pF
Y2
8MHz
SDIO_CMD
BOOT0
RESET
R32
1K
S3
RESET
C30
104
R19
10K
BOOT1
D7
1N4148
D6
1N4148
BT1
Battery
C33
104
U5
BELL
+5V
Q1
NPN
R16
1K
R18
BEEP
C29
6P
C34
6P
U10
32.768
XX
OUT
VCC
GND
C35
C36
C37
C38
C39
C40
C41
C42
104
P9
COM
USART1_TX
USART1_RX
J4
SD
CD/D3/CS
CMD/DI
GND
VCC
CLK
GND
D0/DO
D1/NC
D2/NC
IN
COM
ULOCK
R27
R28
R29
R30
R31
10K
SDIO_D3
SDIO_CMD
SDIO_CK
SDIO_D0
SDIO_D1
SDIO_D2
U8
AT86RF231-ZU
RFP
RFN
RST
SLP_TR
SCLK
MOSI
SEL
XTAL1
XTAL2
DVDD
DVDD
DEVDD
EVDD
AVDD
DIG1
DIG2
DIG3
DIG4
CLKM
MISO
IRQ
DVSS
AVSS
Thermal Pad
SPI1_SCK
SPI1_MOSI
SPI1_NSS
SPI1_MISO
RF_RST
RF_IRQ
R23
680
C22
2.2pF
U9
CX-4025
Hot
GND
C24
12pF
C25
12pF
C27
105
C28
105
C31
105
C32
105
Title
Size
B
Number
Revision
Date: 2013/5/10
Sheet of
File: D:\Documents\...\Node.SchDoc
Drawn By: