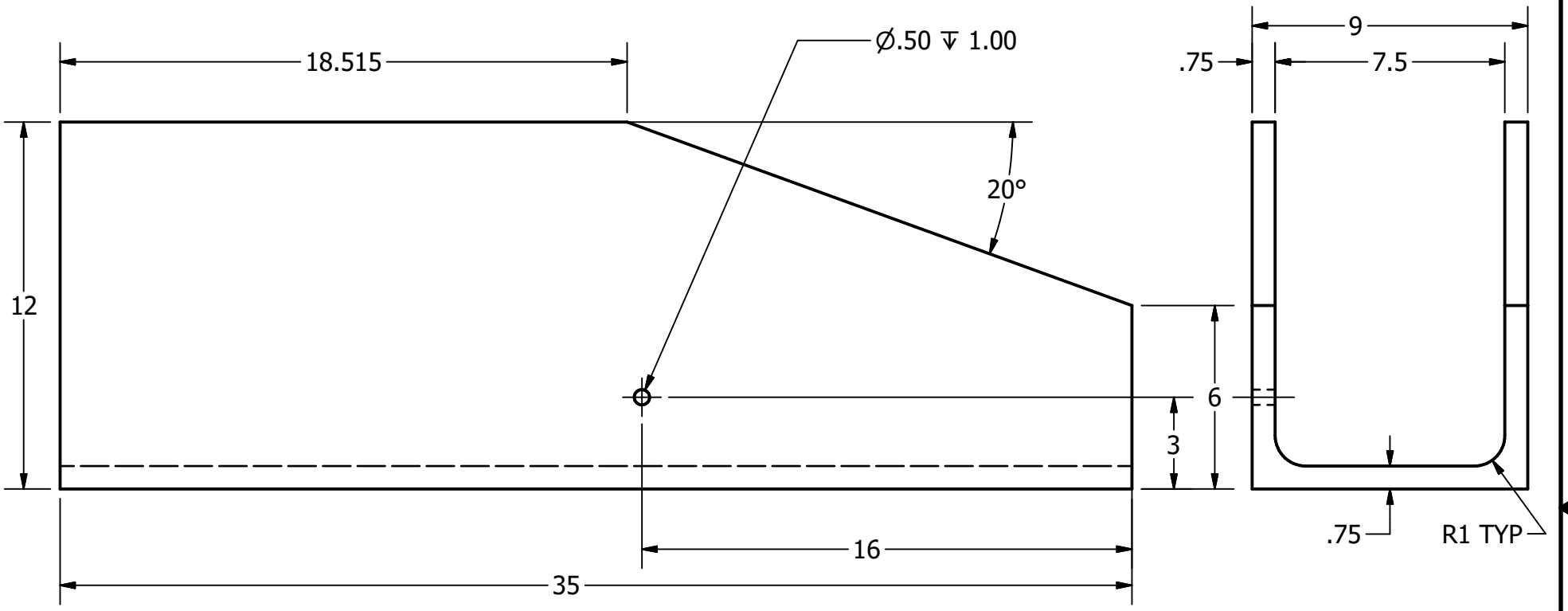

DRAWN LUIS K	2023-04-23	MATERIAL: ALUMINIUM 2024
CHECKED COLE P	2023-04-23	TITLE
QA		CAN GUIDE
MFG LUIS K	2023-04-23	
APPROVED ZACH M	2023-04-23	

SIZE	DWG NO	REV
A	CRS-S23-P15-C.G	0

SCALE 1 / 5 SHEET 1 OF 1