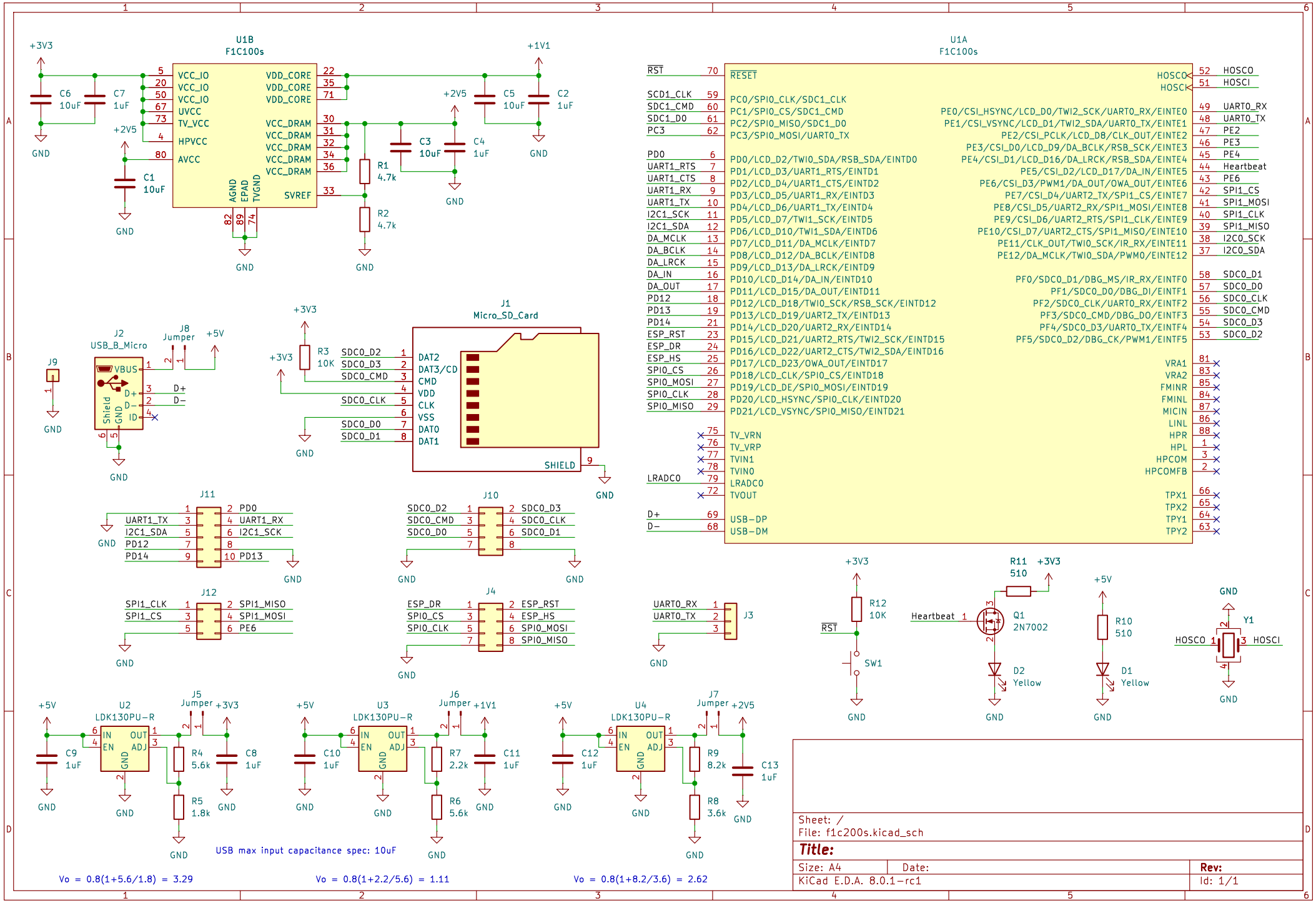
U1B
F1C100s
VCC_IO
VCC_IO
VCC_IO
UVCC
TV_VCC
HPVCC
AVCC
VDD_CORE
VDD_CORE
VDD_CORE
VCC_DRAM
VCC_DRAM
VCC_DRAM
VCC_DRAM
VCC_DRAM
SVREF
AGND
EPAD
TVGND
U1A
F1C100s
RESET
PC0/SPI0_CLK/SDC1_CLK
PC1/SPI0_CS/SDC1_CMD
PC2/SPI0_MISO/SDC1_D0
PC3/SPI0_MOSI/UART0_TX
PD0/LCD_D2/TWI0_SDA/RSB_SDA/EINTD0
PD1/LCD_D3/UART1_RTS/EINTD1
PD2/LCD_D4/UART1_CTS/EINTD2
PD3/LCD_D5/UART1_RX/EINTD3
PD4/LCD_D6/UART1_TX/EINTD4
PD5/LCD_D7/TWI1_SCK/EINTD5
PD6/LCD_D10/TWI1_SDA/EINTD6
PD7/LCD_D11/DA_MCLK/EINTD7
PD8/LCD_D12/DA_BCLK/EINTD8
PD9/LCD_D13/DA_LRCK/EINTD9
PD10/LCD_D14/DA_IN/EINTD10
PD11/LCD_D15/DA_OUT/EINTD11
PD12/LCD_D18/TWI0_SCK/RSB_SCK/EINTD12
PD13/LCD_D19/UART2_TX/EINTD13
PD14/LCD_D20/UART2_RX/EINTD14
PD15/LCD_D21/UART2_RTS/TWI2_SCK/EINTD15
PD16/LCD_D22/UART2_CTS/TWI2_SDA/EINTD16
PD17/LCD_D23/OWA_OUT/EINTD17
PD18/LCD_CLK/SPI0_CS/EINTD18
PD19/LCD_DE/SPI0_MOSI/EINTD19
PD20/LCD_HSYNC/SPI0_CLK/EINTD20
PD21/LCD_VSYNC/SPI0_MISO/EINTD21
TV_VRN
TV_VRP
TVIN1
TVIN0
LRADC0
TVOUT
USB-DP
USB-DM
HOSCO
HOSCI
PE0/CSI_HSYNC/LCD_D0/TWI2_SCK/UART0_RX/EINTE0
PE1/CSI_VSYNC/LCD_D1/TWI2_SDA/UART0_TX/EINTE1
PE2/CSI_PCLK/LCD_D8/CLK_OUT/EINTE2
PE3/CSI_D0/LCD_D9/DA_BCLK/RSB_SCK/EINTE3
PE4/CSI_D1/LCD_D16/DA_LRCK/RSB_SDA/EINTE4
PE5/CSI_D2/LCD_D17/DA_IN/EINTE5
PE6/CSI_D3/PWM1/DA_OUT/OWA_OUT/EINTE6
PE7/CSI_D4/UART2_TX/SPI1_CS/EINTE7
PE8/CSI_D5/UART2_RX/SPI1_MOSI/EINTE8
PE9/CSI_D6/UART2_RTS/SPI1_CLK/EINTE9
PE10/CSI_D7/UART2_CTS/SPI1_MISO/EINTE10
PE11/CLK_OUT/TWI0_SCK/IR_RX/EINTE11
PE12/DA_MCLK/TWI0_SDA/PWM0/EINTE12
PF0/SDC0_D1/DBG_MS/IR_RX/EINTF0
PF1/SDC0_D0/DBG_DI/EINTF1
PF2/SDC0_CLK/UART0_RX/EINTF2
PF3/SDC0_CMD/DBG_DO/EINTF3
PF4/SDC0_D3/UART0_TX/EINTF4
PF5/SDC0_D2/DBG_CK/PWM1/EINTF5
VRA1
VRA2
FMINR
FMINL
MICIN
LINL
HPR
HPL
HPCOM
HPCOMFB
TPX1
TPX2
TPY1
TPY2
UART0_RX
UART0_TX
UART1_RTS
UART1_CTS
UART1_RX
UART1_TX
I2C1_SCK
I2C1_SDA
DA_MCLK
DA_BCLK
DA_LRCK
DA_IN
DA_OUT
PD12
PD13
PD14
ESP_RST
ESP_DR
ESP_HS
SPI0_CS
SPI0_MOSI
SPI0_CLK
SPI0_MISO
SDC1_CLK
SDC1_CMD
SDC1_D0
PC3
PD0
SDC0_D1
SDC0_D0
SDC0_CLK
SDC0_CMD
SDC0_D3
SDC0_D2
SPI1_CS
SPI1_MOSI
SPI1_CLK
SPI1_MISO
I2C0_SCK
I2C0_SDA
J1
Micro_SD_Card
DAT2
DAT3/CD
CMD
VDD
CLK
VSS
DAT0
DAT1
SHIELD
J2
USB_B_Micro
VBUS
D+
D−
ID
Shield
GND
J8
Jumper
J9
J3
J4
J10
J11
J12
U2
LDK130PU−R
U3
LDK130PU−R
U4
LDK130PU−R
IN
EN
OUT
ADJ
GND
J5
J6
J7
Q1
2N7002
D1
Yellow
D2
Yellow
SW1
Y1
Heartbeat
USB max input capacitance spec: 10uF
Vo = 0.8(1+5.6/1.8) = 3.29
Vo = 0.8(1+2.2/5.6) = 1.11
Vo = 0.8(1+8.2/3.6) = 2.62
Sheet: /
File: f1c200s.kicad_sch
Title:
Size: A4
Date:
Rev:
KiCad E.D.A. 8.0.1−rc1
Id: 1/1