Power Delivery

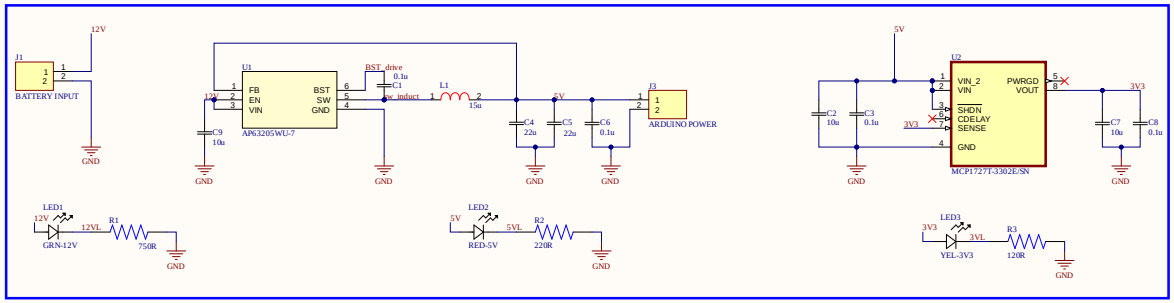

Pump Control

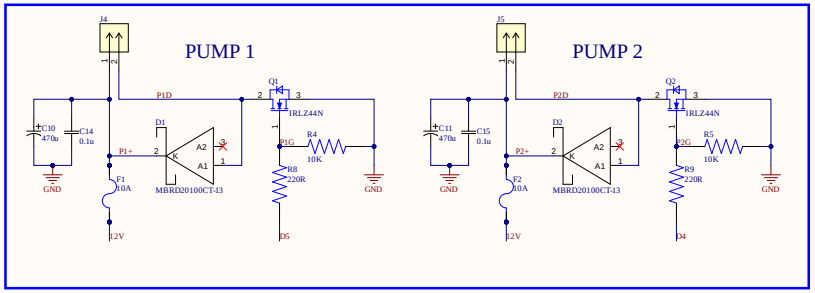

Solenoid Control

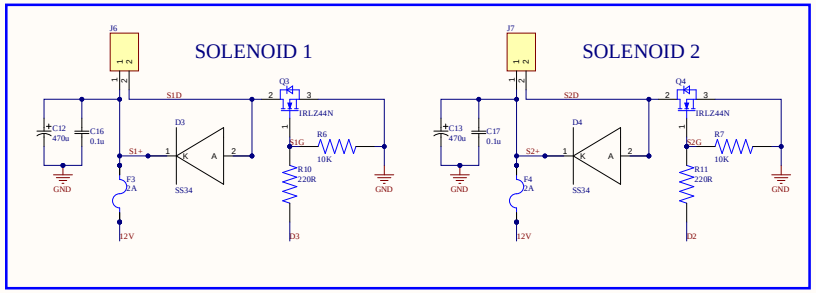

BlueOcean Sensor Module

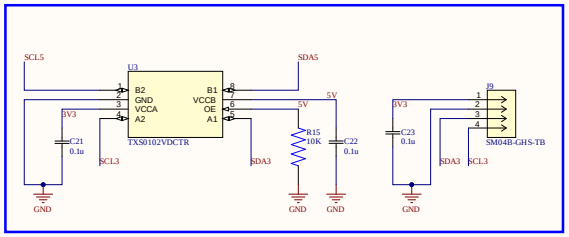

Microcontroller Interface

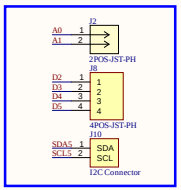

Pressure Sensor Module

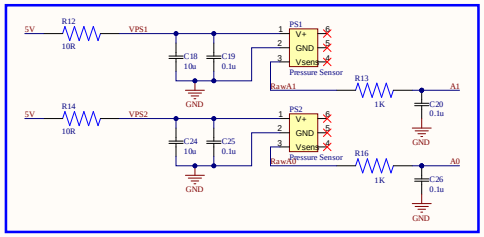

NUWC Variable Ballast Power Distribution and Sensor Integration Board

Drawn By: Zachary Santiana

Size	FCSM No.	DWG No.	Rev
A		ECE4902_2622_003	3
Scale		Sheet 1 of 1	

Board Stack Report