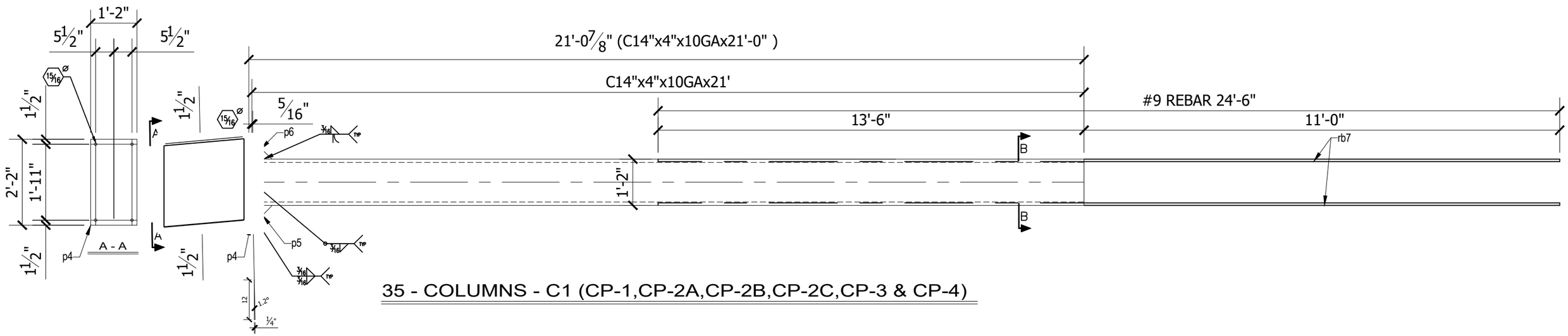

35 - COLUMNS - C1 (CP-1,CP-2A,CP-2B,CP-2C,CP-3 & CP-4)

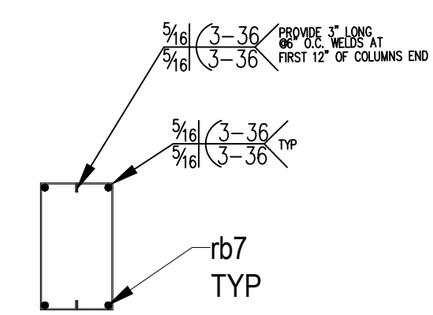

B-B

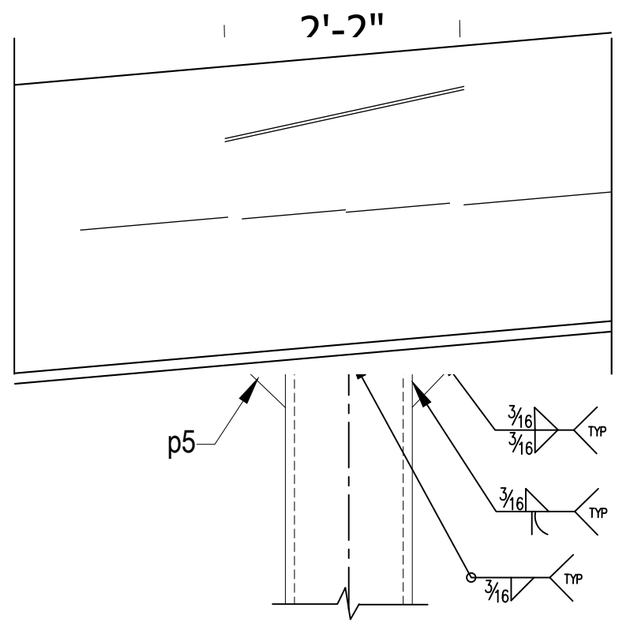

FRONT VIEW

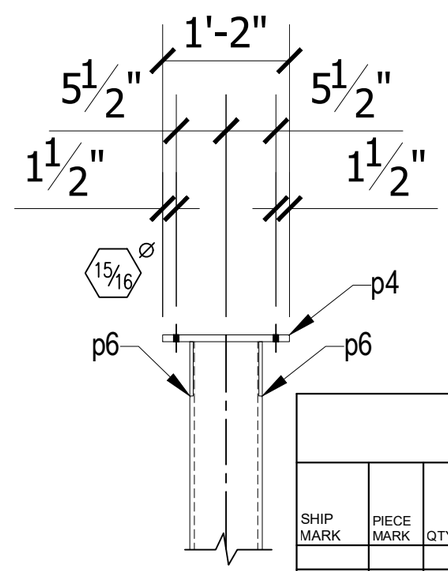

SIDE VIEW

BILL OF MATERIAL

SHIP MARK	PIECE MARK	QTY	DESCRIPTION	FT.	IN.	GR.	REMARKS	WT.
C1		35	COLUMNS					
	C1	70	CEE 14x4x10GA	21	0		G90 (75 KSI)	15642
	p4	35	PL 3/4 x 14	2	2		A572	2710
	p5	70	PL 3/8 x 6	0	6		A572	146
	p6	70	PL 3/8 x 6	0	6		A572	146
	rb7	140	#9 REBAR	24	6	60	A706	11662
								30306

PROJECT SPECIFIC NOTES (UNO):
G90

MATERIAL : A36 UNO
PAINT: COLD GALV ALL PLAIN STEEL & WELDS
HOLES: 15/16"- UNO

DO NOT PAINT AT THE LOCATIONS INDICATED

DATE	REV	REVISION/DESCRIPTION
7-18-22	0	FOR FABRICATION
6-22-22	A	FOR APPROVAL

DESIGN/REVIEW AUTHORITY:
PLEASE REVIEW THIS DRAWING CAREFULLY

We assume NO responsibility for the accuracy of the information in the contract documents including architectural and structural drawings.This drawing represents our best interpretation of the contract documents.Unless Noted Otherwise when it is returned from approval it will be assumed that the design authority confirms that we have correctly interpreted the contract documents,and we are released to begin fabrication using these drawings.

PROJECT: COTTINGHAM RV
4858 S SAM HOUSTON PKWY E PEARLAND, TX 77581

Skyline Steel Inc.
631 W COMMERCE AVE
GILBERT, AZ 85253
PHONE: 480-926-0122
FAX: 480-926-9178
www.skylinesteelincaz.com

CUSTOMER: TITAN SOLAR POWER NV.
DRAFTING SERVICE: SKYLINE STEEL INC
REV. NO 0
DATE: 6/21/2022
DRAWN: RC
CHECKED: ETC
JOB NO SF21-464
DWG. NO C1