Main MCU (ESP32-WROOM-32)

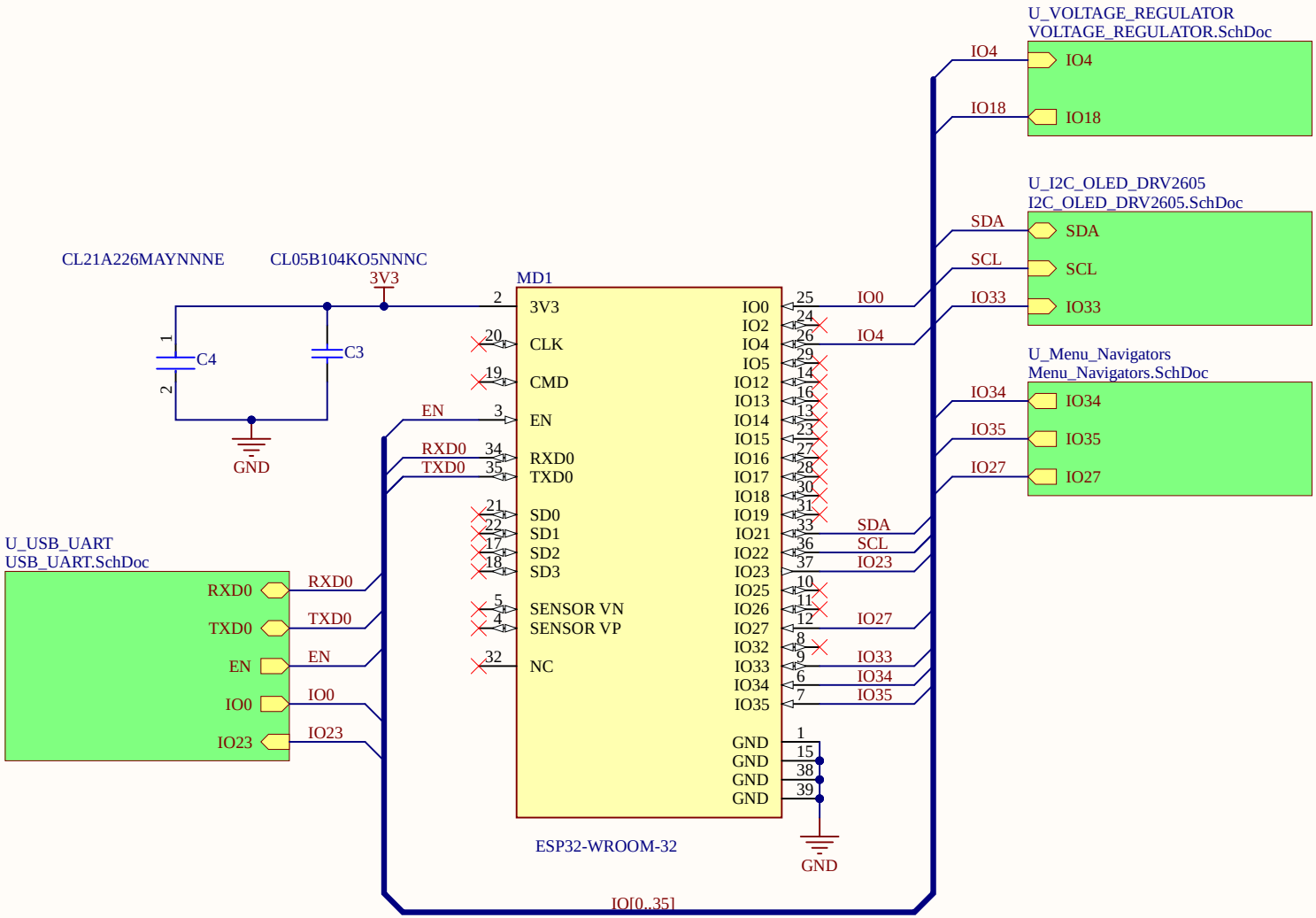

ESP32 core MD1 ESP32- WROOM- 32 on 3V3 with local 100 nF + 10 µF decoupling.UART0 to CP2102N; I2C on IO21/IO22; nav buttons on IO33/IO34/IO35.Boot straps: EN pull- up; IO0 pulled high, forced low only for flashing.Keep solid ground under module; keep antenna edge clear of copper.

Title	TapBand V1.1		
Size A	Number SCH-001		Revision Rev 1.0
Date:	9/03/2025	Sheet of	1 of 5
File:	C:\Users\..\Main.SchDoc	Drawn By:	M. Zaeem

I2C peripherals DRV2605L + OLED

Connect 10,000 RPM Flat Vibration Motor (3V, ROHS, LCM1027A2445F) to J1 connector located beneath the OLED display, at the designated vibrator motor position.

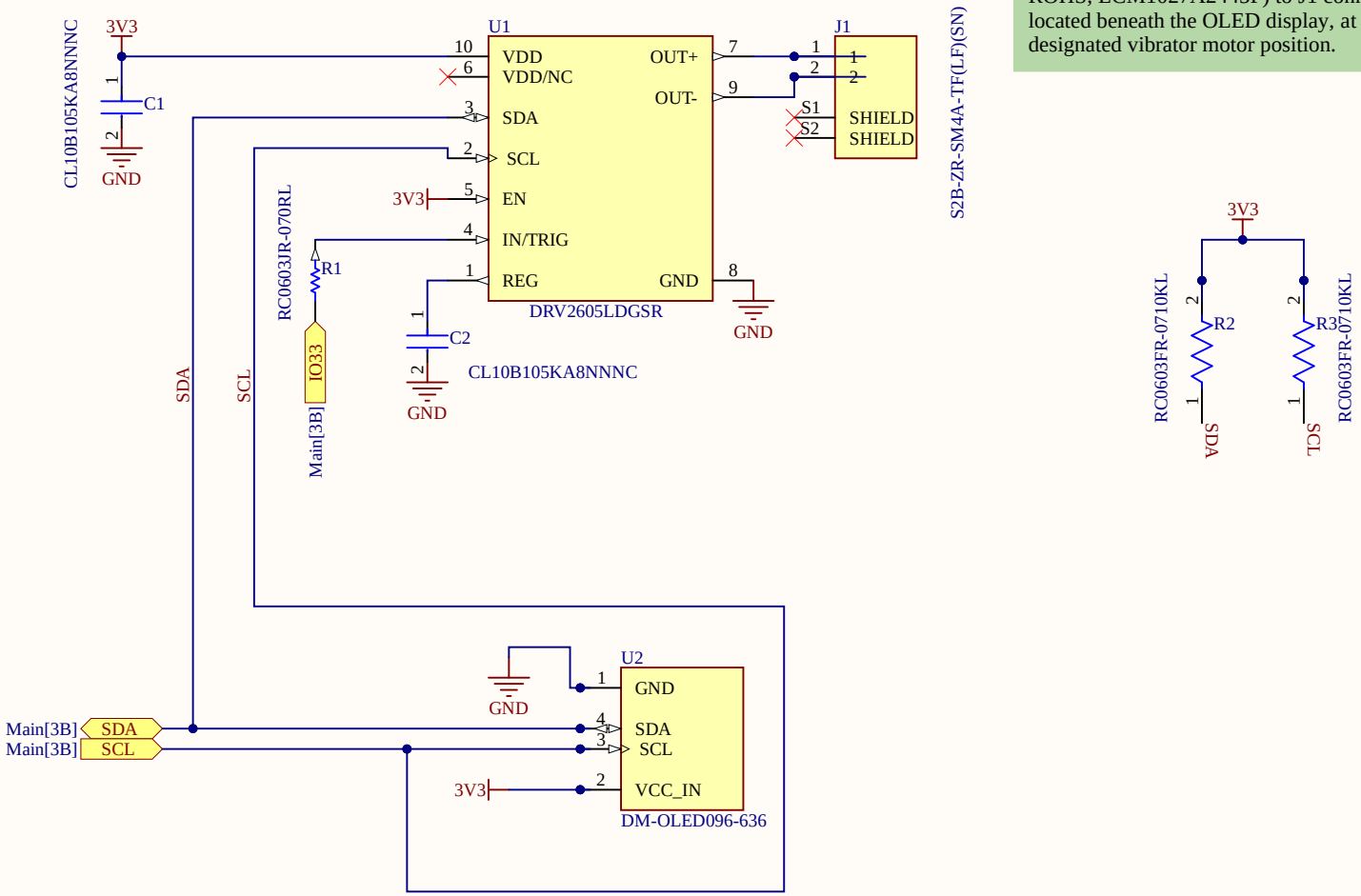

U1 DRV2605L haptic driver on I2C. OUT+/OUT− to J1 motor. C1/C2 near VDD/REG.U2 0.96" OLED (DM- OLED096- 636) on same I2C bus.Pull- ups R2/R3 (1(kΩ) to 3V3 on SDA/SCL.

Title	TapBand V1.1		
Size A	Number SCH-001		Revision Rev 1.0
Date: 9/03/2025		Sheet of	2 of 5
File: C:\Users\..\I2C_OLED_DRV2605.SchDoc		Drawn By:	M. Zaeem

USB- UART (CP2102N + USB- C)

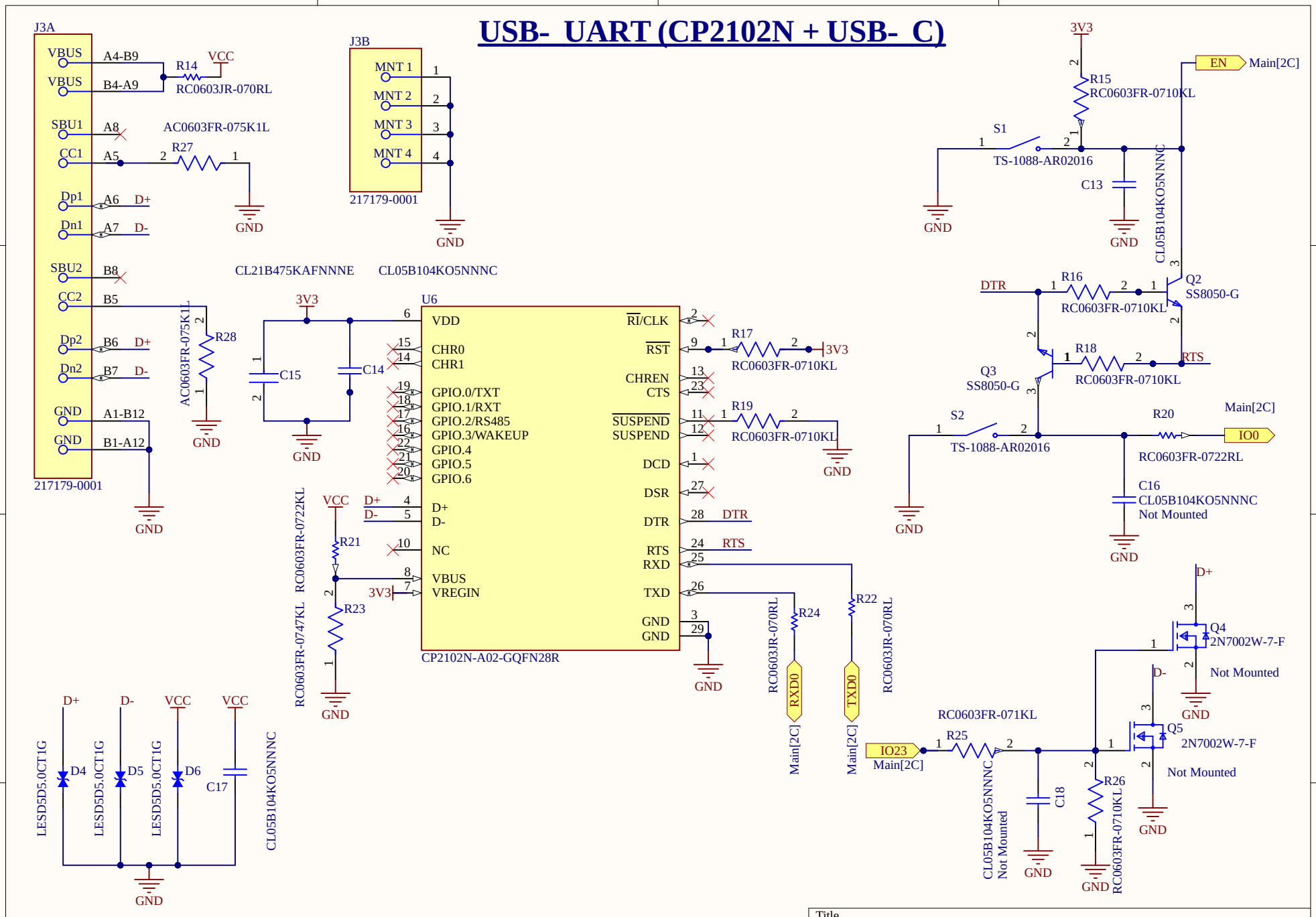

Series; ESD D4–D6 on VBUS and data lines.Auto- reset/program:
DTR/RTS drive EN and IO0 via Q2/Q4
Local decoupling C12/C11.

Title	TapBand V1.1		
Size A	Number SCH-001		Revision Rev 1.0
Date:	9/03/2025	Sheet of	3 of 5
File:	C:\Users\..\USB_UART.SchDoc	Drawn By:	M. Zaeem

Power and Charging (VBAT → 3V3)

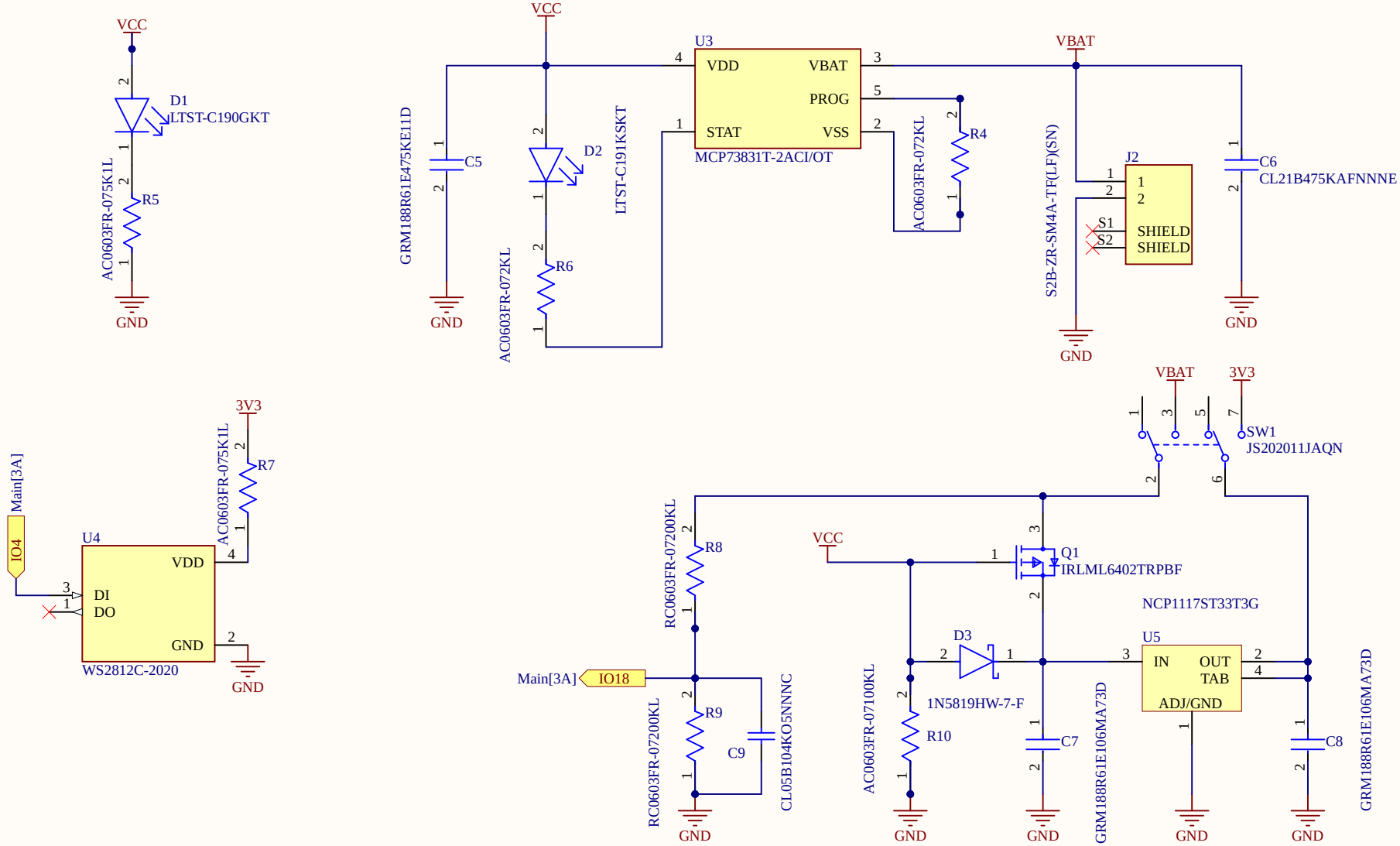

U4 MCP73831 Li- ion charger from VCC/USB. RPROG sets ICHG; STAT LED D1 via R10.
J2 battery connector; C5/C6 4.7 µF near VBAT/VDD for charger stability.
Q1 P- MOS provides reverse- polarity and ideal- diode path from VBAT to system.
U5 NCP1117- 3.3 LDO with C7/C8 10 µF input/output. ADC Battery Level MCU at IO18.

Title	TapBand V1.1	
Size A	Number SCH-001	Revision Rev 1.0
Date: 9/03/2025	Sheet of 4 of 5	
File: C:\Users\..\VOLTAGE_REGULATOR.SchDoc	Drawn By: M. Zaeem	

Menu Navigators (Buttons)

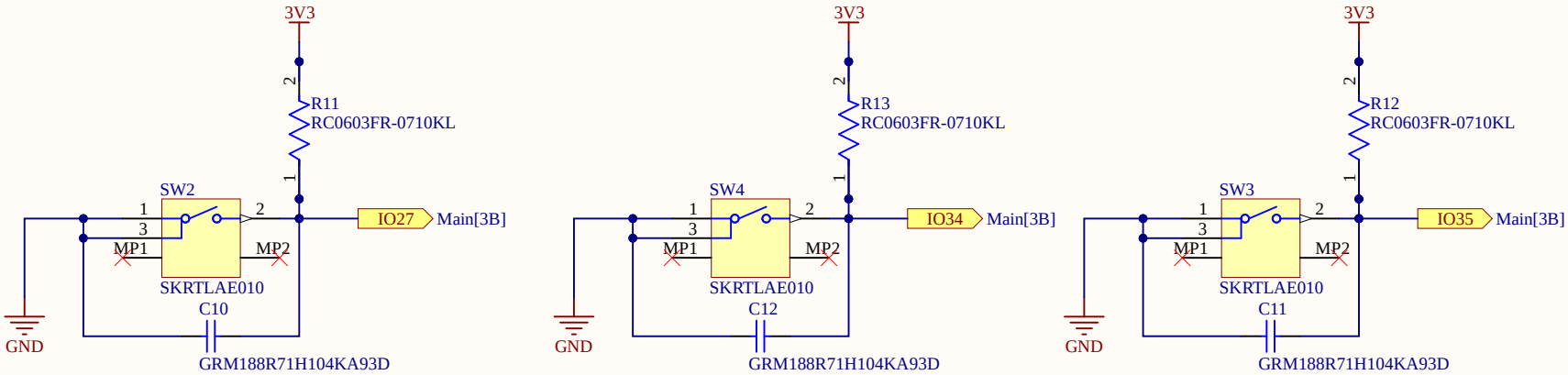

S2-4 For Menu Navigation 10 kΩ pull- up and C10-12 100 nF for debounce/EMI.

Title	TapBand V1.1		
Size A	Number SCH-001		Revision Rev 1.0
Date:	9/03/2025	Sheet of	5 of 5
File:	C:\Users\..\Menu_Navigators.SchDoc	Drawn By:	M. Zaeem

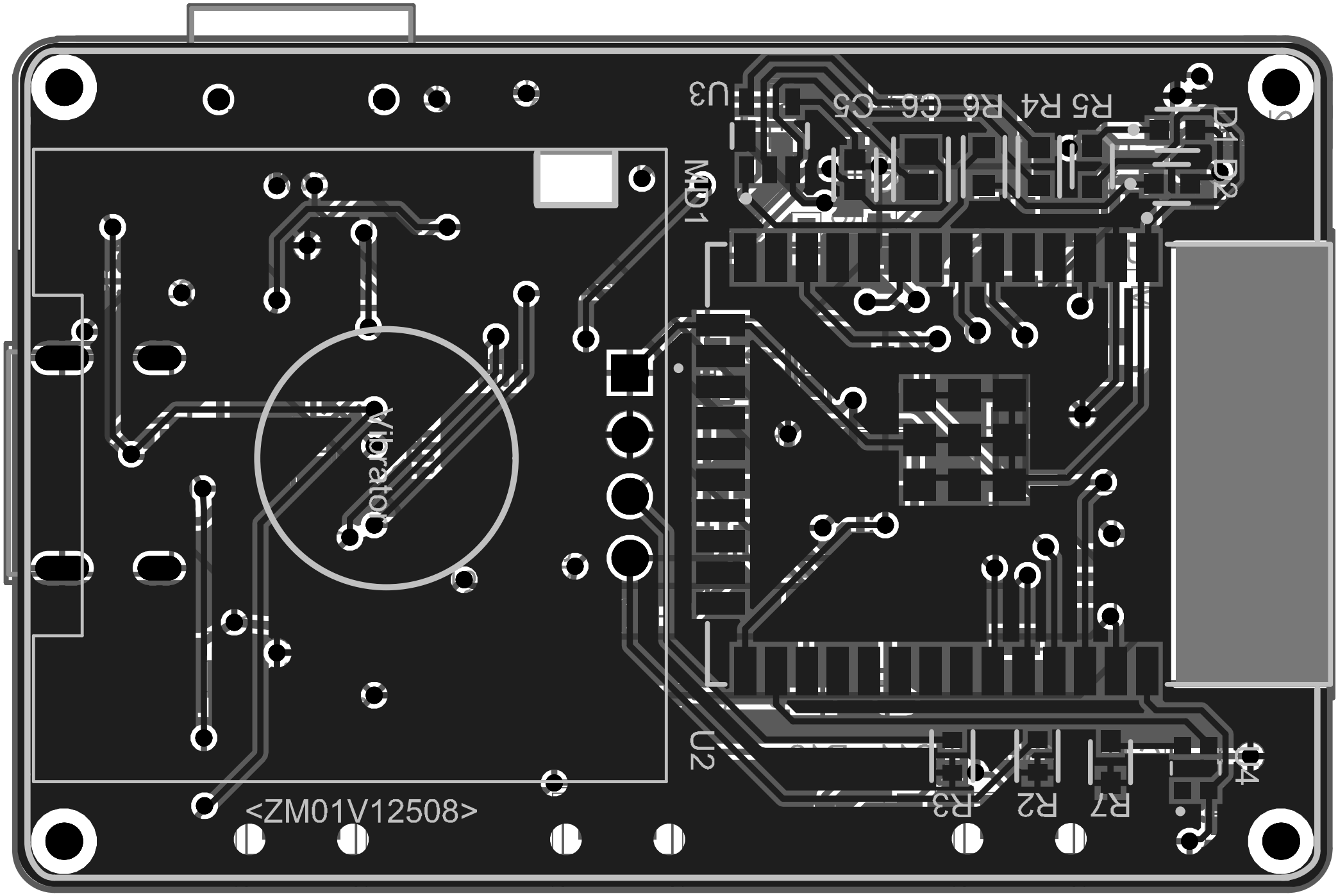
C4
R7
R2
R3
U2
MD1
Vibrator
<ZM01V12508>
U3
R5 R4 R6 C6 C5
D1 D2

Board Stack Report