Design of a Parking Garage Lighting & Indicator System Using Digital Logic Control

1st Zekarias Jemberu
Department of Electrical and Computer Engineering
Abu Dhabi University
Abu Dhabi, United Arab Emirates
Email: 1093900@students.adu.ac.ae

2nd Abdullah Adel
Department of Electrical and Computer Engineering
Abu Dhabi University
Abu Dhabi, United Arab Emirates
Email: 1093303@students.adu.ac.ae

3rd Salman Mohammed
Department of Electrical and Computer Engineering
Abu Dhabi University
Abu Dhabi, United Arab Emirates
1098158@students.adu.ac.ae

4th Dr. Mohammad Ismail Awad
Department of Electrical and Computer Engineering
Abu Dhabi University
Abu Dhabi, United Arab Emirates
Email: mohd.awad@adu.ac.ae

***Abstract*—In this paper, the full design and simulation and hardware implementation of a digital logic control system of an automated parking garage control is given. The system employs combinational logic circuits to scan four inputs of parking space using IR sensors, and to drive a number of visual display devices such as binary LEDs,and a seven-digit digital disply, which was missed during phase one but it is included now. The optimization of Boolean algebra and Karnaugh Map simplified the logic expressions and they were implemented with the help of standard High-speed CMOS (HC) integrated circuits. The design was initially checked in the Tinkercad simulation to check the proper logical behavior and then it was implemented physically on a breadboard. The operation was experimentally confirmed to remain reliable in all 16 combinations of inputs, which is a precise representation of the parking occupancy and alert status. The system provides real time indication and alert capability with simplicity and affordability through a microcontroller free purely hardware based design.**

***Index Terms*—Digital Logic Design, Combinational Circuits, Parking Management System, Karnaugh Maps, CMOS Integrated Circuits, Hardware Implementation, 74HC Series.**

I. Introduction

THE fast spread of city infrastructure and vehicle density has driven an urgent requirement to use an efficient parking management system in the contemporary cities [1]. Traditional parking spots do not serve as real-time occupancy monitors, which leads to congestion, fuel wastage, and frustration by the user. Although most modern solutions are based on microcontrollers or programmable logic controllers, writing the software on simple digital logic can give invaluable practical knowledge on how to design combinational circuits, apply Boolean algebra, and optimize hardware, as well as, it can serve as an understanding of macro hardware design, human-computer interaction, and microprocessor usage [2], [3].

This project aims at the design of a trustworthy parking garage control system using solely the combinational logic integrated circuits (ICs), without using any microprocessor-based control. The major task aims are:

- Tracking of four independent parking spaces using binary occupancy inputs represented by push-button switches.
- Turning on overhead lights when there is someone present in a room, but using as little energy as possible.
- Providing visual and auditory warning systems (LEDs and a buzzer) when the occupancy is extremely high.
- show the present occupancy rate on a 7-digit display.
- property Implementing all functionality as optimized Boolean expressions and logic minimization.

This design enables non-experts to have a practical experience in the development of a reliable and deterministic digital system by relying only on the methods of combinational logic rather than practical, theoretical methods, which bridges the divide between theory and practice of digital system construction [3]. Digital control systems were considered in previous studies in the context of parking management [4], yet little has been said about pure combinational logic implementations that are not only simple but also effective in small-scaled parking solutions [2]. This will guarantee reliability of the system and would remove the complexity of the software and would offer high educational content to students who study the principles of digital electronics.

The rest of the paper is organized in the following way: in Section II the materials and methods are presented, i.e., the system architecture, truth table formulation, Karnaugh Map minimization, and circuit design. Section III presents verification and hardware implementation findings of a simulation. Section III-B compares system performance, such as timing, reliability and power performance. Lastly, Section V will be the lessons learned and future improvement suggestions.

II. Materials and Methods

A. System Architecture and Specifications

The parking garage control system employs a combinational logic architecture where four binary inputs (S_1, S_2, S_3, S_4) represent parking space occupancy status. In the hardware prototype, these inputs were implemented using **IR sensors** to simulate the output of real occupancy sensors. The system generates multiple outputs including overhead lighting (White LED), warning indicators (Yellow LED), full/empty status indicators (Red/Green LEDs), and a numeric display showing the current occupancy count [3].

The design specifications are summarized as follows:

- **Overhead Lighting (L):** Activates when one or more parking spaces are occupied, following energy efficiency principles outlined in [2].
- **Empty Indicator (E):** Green LED active only when all spaces are empty (zero occupancy).
- **Warning Indicator (W):** Yellow LED active when three out of four spaces are occupied (critical level).
- **Full Indicator (F):** Red LED active when all four spaces are occupied (maximum capacity).
- **Buzzer:** Activates simultaneously with the Red LED to provide an audible alert at full occupancy.
- **Digital Display:** Seven-segment display showing occupancy count (0–4) using standard BCD encoding [2].

The overall system architecture is illustrated in Figure 4, showing ir sensors, combinational logic processing blocks, and output indicators.

B. Truth Table Development and Analysis

A complete truth table with 16 entries (2^4 combinations) was constructed to define the system behavior, following the standard procedure for combinational logic design [3]. Table I presents the condensed truth table for key operational states.

TABLE I: System Truth Table for Critical Occupancy States

Car Count	S1	S2	S3	S4	White (L)	Yellow (W)	Red (F)	Green (E)
0	0	0	0	0	0	0	0	1
1	0	0	0	1	1	0	0	0
2	0	0	1	1	1	0	0	0
3	0	1	1	1	1	1	0	0
4	1	1	1	1	1	1	1	0

C. Karnaugh Map Optimization

Karnaugh Maps (K-Maps) were employed to derive minimized Sum-of-Products (SOP) expressions for all output signals, using standard logic minimization techniques [2]. The optimization process eliminated redundant logic terms, reduced gate count, and ensured efficient hardware implementation while maintaining full functional accuracy [3].

$$\text{White (L)} = S_1 + S_2 + S_3 + S_4$$

$$\text{Green (E)} = \overline{S_1 + S_2 + S_3 + S_4}$$

$$\text{Yellow (W)} = S_1 S_2 S_3 \overline{S_4} + S_1 S_2 \overline{S_3} S_4 + S_1 \overline{S_2} S_3 S_4 + \overline{S_1} S_2 S_3 S_4$$

$$\text{Red (F)} = S_1 S_2 S_3 S_4$$

For the seven-segment display, binary-to-BCD conversion logic was implemented using additional K-map optimization to generate appropriate segment patterns for the CD4511 display driver input, following the methodology outlined in [2].

D. Circuit Design and Component Selection

The complete logic circuit was implemented using standard **High-speed CMOS (74HC Series)** integrated circuits, chosen for their low power consumption, wide voltage range, and high noise immunity, as documented in their specifications [5]. **IR sensors** were used to simulate the occupancy sensor inputs (S_1–S_4), allowing easy testing of all possible logic combinations in hardware. To ensure stable inputs and prevent indeterminate states, pull-down resistors were used, referencing the established practice for managing CMOS inputs [6].

- **Input Devices:** Four **IR sensors** (simulated sensors for parking occupancy).
- **Logic Gates: 74HC08** (Quad 2-input AND), **74HC32** (Quad 2-input OR), **74HC04** (Quad 2-input NOT) and **74HC86** (Quad 2-input XOR).
- **Display Driver: CD4511** BCD-to-Seven-Segment Latch/Decoder/Driver.
- **Display:** Common Cathode Seven-Segment Display for occupancy indication.
- **Indicators:** White LED (lighting), Yellow LED (warning), Red LED (full), Green LED (empty).
- **Resistors:** 220 Ω current-limiting resistors used for all LED outputs.

The complete circuit schematic illustrating all interconnections between ICs, LEDs, and display modules is shown in Figure 1.

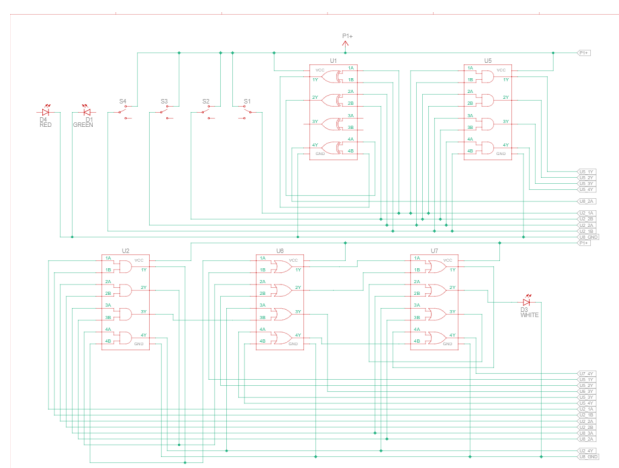

Fig. 1: Complete circuit schematic showing IR sensors as inputs, combinational logic ICs (74HC08, 74HC32, 74HC04, 74HC86), CD4511 BCD-to-seven-segment driver, LED indicators, and seven-segment display interconnections.

E. Simulation Verification

Before hardware construction, the full logic circuit was simulated using **Tinkercad Circuits** to verify its behavior

for all input combinations [2]. The simulation ensured correct activation of all LEDs and the seven-segment display, consistent with the theoretical truth table (Table I) and Boolean expressions from Karnaugh Map simplifications (Section II).

Figure 2 shows the Tinkercad simulation setup, while Figure 3 highlights the output responses for the critical full-occupancy state (input 1111), confirming correct operation of the white overhead light, yellow warning indicator, and red full indicator.

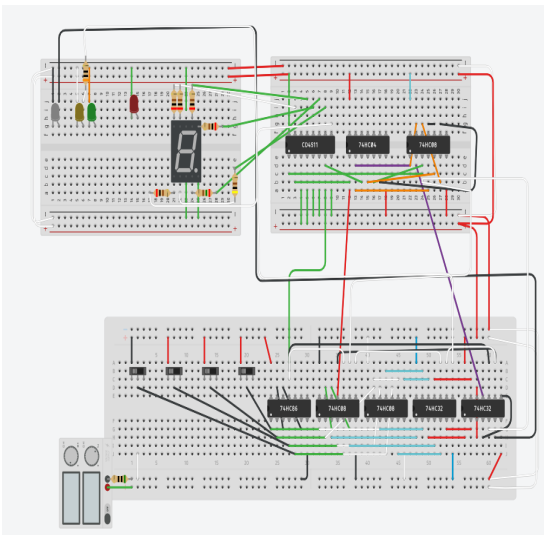

Fig. 2: Tinkercad simulation of the parking garage logic system showing the setup with IR sensors, LED indicators, and the seven-segment display.

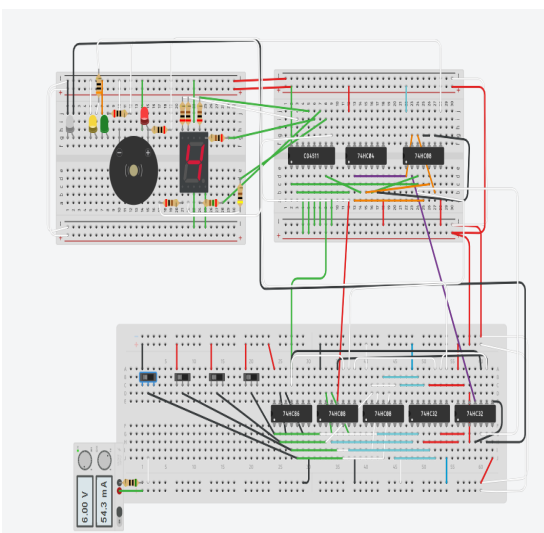

Fig. 3: Simulation output for full occupancy (input 1111) showing correct activation of all LEDs and seven-segment display.

Although Tinkercad does not generate timing waveforms, step-by-step simulation confirmed that all outputs respond immediately and deterministically to input changes, ensuring glitch-free combinational behavior.

III. Results and Discussion

A. Hardware Implementation and Testing

After successful simulation verification, the system was physically implemented on a breadboard using **74HC-series CMOS logic ICs**. **IR proximity sensors** were used to detect vehicle presence, replacing pushbuttons for automatic occupancy detection. Each sensor represented a binary input (S_1, S_2, S_3, S_4) to the combinational logic circuit. Figure 4 shows the assembled prototype with IR sensors positioned for accurate detection.

Functional testing confirmed correct system behavior for all occupancy conditions. For the empty garage (0000), only the **Green LED** (Empty indicator) illuminated, and the seven-segment display showed “0” (Figure 5). This confirms that the CD4511 BCD-to-Seven-Segment Decoder correctly converted the binary input 0000 into the appropriate segment pattern.

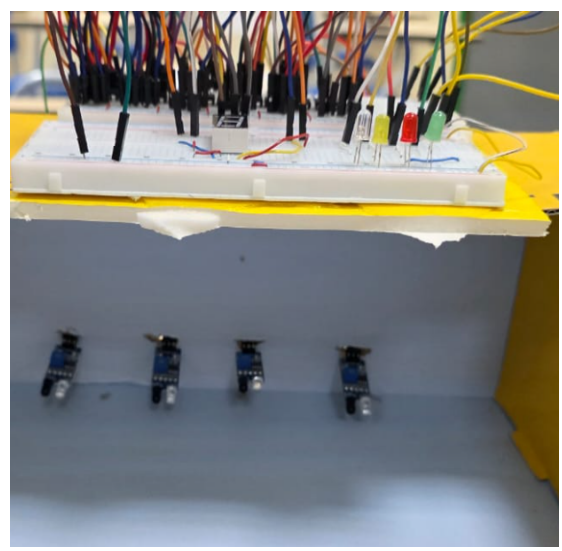

Fig. 4: Breadboard prototype during hardware testing. IR sensors detect vehicles and LEDs with seven-segment display indicate occupancy state.

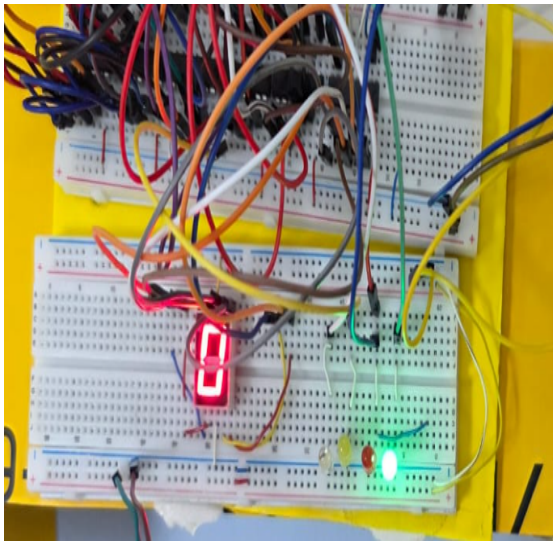

Fig. 5: Seven-segment display showing occupancy count “0” for empty garage.

As the garage moves to single occupancy (0001), the **White LED** (overhead lighting) turns on, and the display shows “1” (Figure 6). This verifies that the combinational logic circuit properly detects one car and activates the corresponding indicator. The decoder ensures accurate segment illumination for the decimal “1” from the binary input.

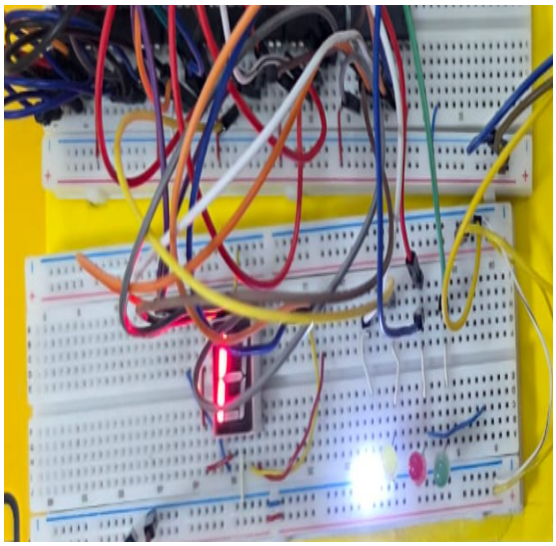

Fig. 6: Seven-segment display showing occupancy count “1” for single occupancy.

When two cars are present (0011), the white LED remains active, and the display shows “2” (Figure 7). The binary input 0011 is successfully decoded, confirming that the logic circuit can handle multiple simultaneous inputs without error. This demonstrates the correctness of the minimized Boolean expressions implemented using 74HC-series ICs.

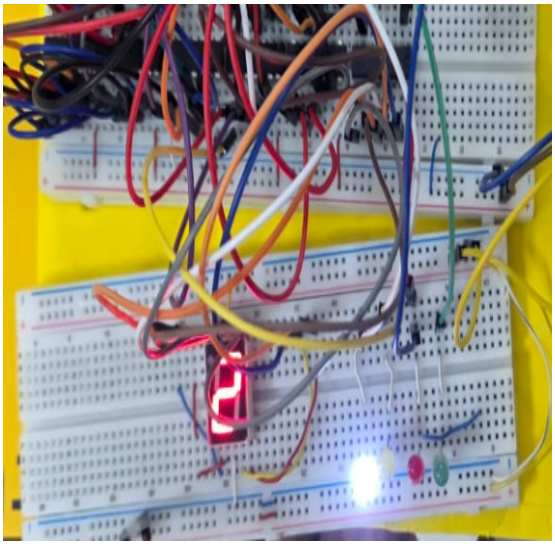

Fig. 7: Seven-segment display showing occupancy count “2” for double occupancy.

For triple occupancy (0111), the **Yellow LED** (warning indicator) illuminates alongside the white LED, and the display shows “3” (Figure 8). The combination of visual indicators and accurate display provides an intuitive warning of approaching full capacity. This stage confirms the correct implementation of the logic for threshold-based warning (three cars).

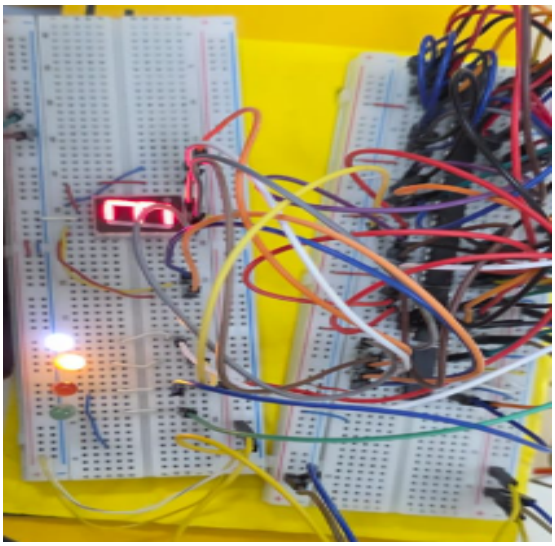

Fig. 8: Seven-segment display showing occupancy count “3” for triple occupancy.

Finally, at full occupancy (1111), all LEDs (white, yellow, and red) are active, and the optional buzzer can be triggered. The seven-segment display correctly shows “4” (Figure 9), confirming full-scale system functionality. The hardware verification matches the theoretical truth table and simulation results, ensuring accurate real-time monitoring.

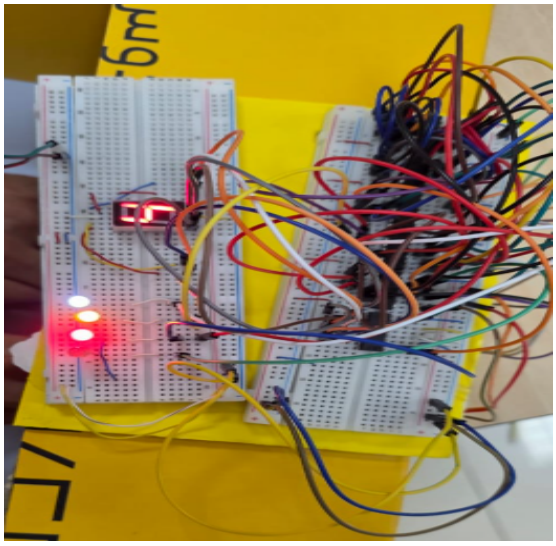

Fig. 9: Seven-segment display showing occupancy count “4” for full occupancy.

Table II summarizes the verification results of the display for the key occupancy states.

TABLE II: Seven-Segment Display Output Verification

Input Pattern	Car Count	Display Output	Status
0000	0	0	Correct
0001	1	1	Correct
0011	2	2	Correct
0111	3	3	Correct
1111	4	4	Correct

B. Performance Analysis

Performance evaluation focused on power efficiency, timing, and reliability. Low power consumption was achieved using 74HC-series CMOS ICs, with total current draw within datasheet specifications [5]. Propagation delays were in the nanosecond range, and all outputs transitioned deterministically without glitches or race conditions [3].

Minor challenges during testing included:

- **IR sensor alignment:** Some sensors required slight adjustments to ensure consistent detection of vehicles.
- **Breadboard wiring congestion:** Dense wiring was managed using color-coded leads and organized layouts.

The spread-out verification of the seven-segment display (Figures 5–9) demonstrates that the CD4511 decoding and combinational logic outputs are reliable across all occupancy states. The combination of Tinkercad simulation and physical testing provides confidence in both the design and practical implementation, validating its suitability for academic and real-world applications [1].

IV. Engineering Report Elements

A. Gantt Chart

The Gantt chart in Figure 10 illustrates the key stages of the project, including system design, Tinkercad simulation,

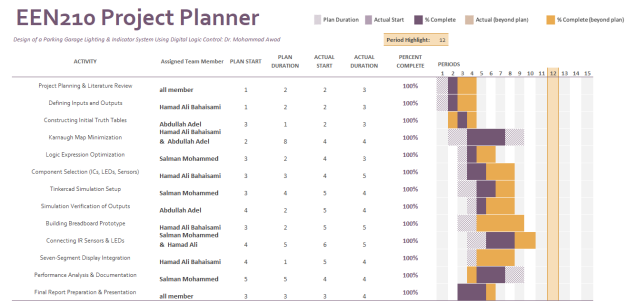

Fig. 10: Project timeline and milestones for hardware design, simulation, testing, and validation of the automatic parking garage control system.

hardware assembly, functional testing, debugging, and documentation. Each stage was assigned to team members based on expertise and workload distribution, ensuring parallel progress and timely completion.

B. Team Reflections

The project was completed collaboratively by Hamad Ali Bahaisami, Abdullah Adel, Salman Mohammed, and supervised by Dr. Mohammad Ismail Awad. Each team member contributed to both hardware and software components:

- **Hamad Ali Bahaisami:** Developed combinational logic diagrams, derived Boolean expressions, and verified truth tables through simulation.
- **Abdullah Adel:** Implemented hardware on breadboard, wired sensors and LEDs, and coordinated IR sensor placement for accurate vehicle detection.
- **Salman Mohammed:** Designed and tested the seven-segment display circuit with CD4511 decoder, verified display outputs for all occupancy states, and assisted with troubleshooting logic errors.

The team faced several challenges, such as aligning IR sensors to prevent false detection, managing breadboard wiring congestion, and verifying LED and display outputs for all occupancy scenarios. These challenges were overcome through iterative testing, color-coded wiring, and cross-verification of logic outputs. The experience strengthened understanding of digital combinational logic, sensor integration, and embedded system testing.

C. Impact Analysis

This project demonstrates a practical and scalable approach to automated vehicle occupancy detection in parking garages. By integrating IR sensors, logic ICs, and visual indicators, it provides a low-cost, reliable system capable of real-time monitoring and alerting. The system can reduce human monitoring requirements, improve safety during restricted hours, and support energy-efficient lighting control based on occupancy.

The results highlight the importance of precise sensor placement, logic optimization for minimal delay, and robust

hardware-software integration. The project serves as an educational platform for understanding combinational circuits, sensor interfacing, and embedded system design principles.

D. New Learning

Through this project, the team acquired multiple new skills and insights:

- **Hardware Design and Integration:** Gained practical experience with 74HC-series CMOS ICs, IR sensor interfacing, and seven-segment display implementation.
- **Digital Logic Application:** Applied combinational logic design, Boolean simplification, and CD4511 BCD-to-seven-segment decoding in a real-world scenario.
- **Troubleshooting and Debugging:** Learned systematic approaches to identify sensor misalignment, wiring errors, and logic faults.
- **Collaboration and Task Management:** Developed teamwork skills by distributing tasks according to individual strengths and coordinating testing, simulation, and documentation.
- **System Performance Evaluation:** Understood methods to analyze timing delays, LED response accuracy, and overall system reliability.

These learnings are directly transferable to larger-scale embedded system projects, industrial automation, and real-time monitoring systems, enhancing both technical and professional competencies.

V. Conclusion

The parking garage lighting and indication system was created and simulated and implemented successfully based on the basic principles of digital logic. This project has shown that the complicated occupancy monitoring control features can be successfully accomplished with only optimized combinational circuitry and no microprocessors are involved. Reliable and low power hardware base Reliable, low power hardware base was achieved with the use of 74HC series CMOS logic gates, which were appropriate to run real time applications.

The system is a reliable system that uses four IR sensors to manage various output devices on the basis of the stipulated operational requirements. Karnaugh Map optimization produced efficient Boolean expressions that reduced the number of components with the entire functionality. Simulation and hardware prototyping respective verification ensured that the physical prototype has the same behaviour with the virtual model in all the occupancy conditions.

Although the design is serving its intended purpose quite well, there are a number of possible improvements that can be made to enhance functionality and scalability. A sequential logic entry/exit counting implementation would allow a more accurate occupancy count. This could be expanded in the future with the addition of microcontrollers that would enable other sophisticated processes like data logging, remote monitoring and dynamic pricing control.

In general, this project has managed to connect theoretical concepts of digital logic to practical hardware implementation, which offered a holistic learning opportunity in combinational circuit design and presented an effective, practical parking management solution.

Acknowledgment

The authors would like to thank Dr. Mohammad Ismail Awad at Abu Dhabi University for providing the support necessary for the successful hardware implementation and testing of this project.

References

[1] W. A. Jabbar, "Internet of Things enabled parking management system using long range wide area network for smart city," *Internet of Things and Cyber-Physical Systems*, vol. 4, pp. 24–30, Jan. 2024.

[2] S. Brown and Z. Vranesic, *Fundamentals of Digital Logic with Verilog Design*, 4th ed. New York, NY, USA: McGraw-Hill, 2023.

[3] J. D. Carpinelli, *An Animated Introduction to Digital Logic Design*. Newark, NJ, USA: New Jersey Institute of Technology, 2023.

[4] D. Palodhi et al., "Design and Implementation of a Smart Renewable-Powered Electric Vehicle with Intelligent Parking Integration for Sustainable Urban Mobility," *i-manager's J. Electrical Eng.*, vol. 19, no. 1, pp. 31–41, Mar. 2025.

[5] Texas Instruments, "SNx4HC08 Quadruple 2-Input AND Gates Datasheet," Texas Instruments, Dallas, TX, USA, Feb. 2025.

[6] Texas Instruments, "Implications of Slow or Floating CMOS Inputs," Application Report SCBA004E, Texas Instruments, Dallas, TX, USA, Jul. 2021.