College of Engineering

EEN210: Digital Circuits

Fall 2024

Date: 14/11/2024

Project Phase 3

Instructor: Dr.Mohamed Moursi

Name	Student ID
Mohamed Alaaeldin	1092460
Zekarias Jemberu	1093900
Mengistu Animaw	1093890

Link: https://www.tinkercad.com/things/ief8p7CuaSX-een-210-phase-3/editel?sharecode=Cu2XeVx2AxhKBp33D1qUjrty2JtX822SnvNmpyVlv5k

Abstract:

In Phase 3 of the project, we are required to submit a fully operational simulation of a light control system in TinkerCad. We have used the Boolean expressions developed in Phase 2, to draw how the gates are supposed to be like; after that we have worked on TinkerCad accordingly.

We have also Colour coded our wires to make it easier to trace back, it goes as follows.

Red – Power , Black – Ground , Pink – Outputs, Purple – S_1, Orange – S_2, Green – S_3, Blue – S_4

White Light:

- *Simplified Boolean expression:* $S_1+S_2+S_3+S_4$

- ***Gates Used; 1x Quad OR Gate***

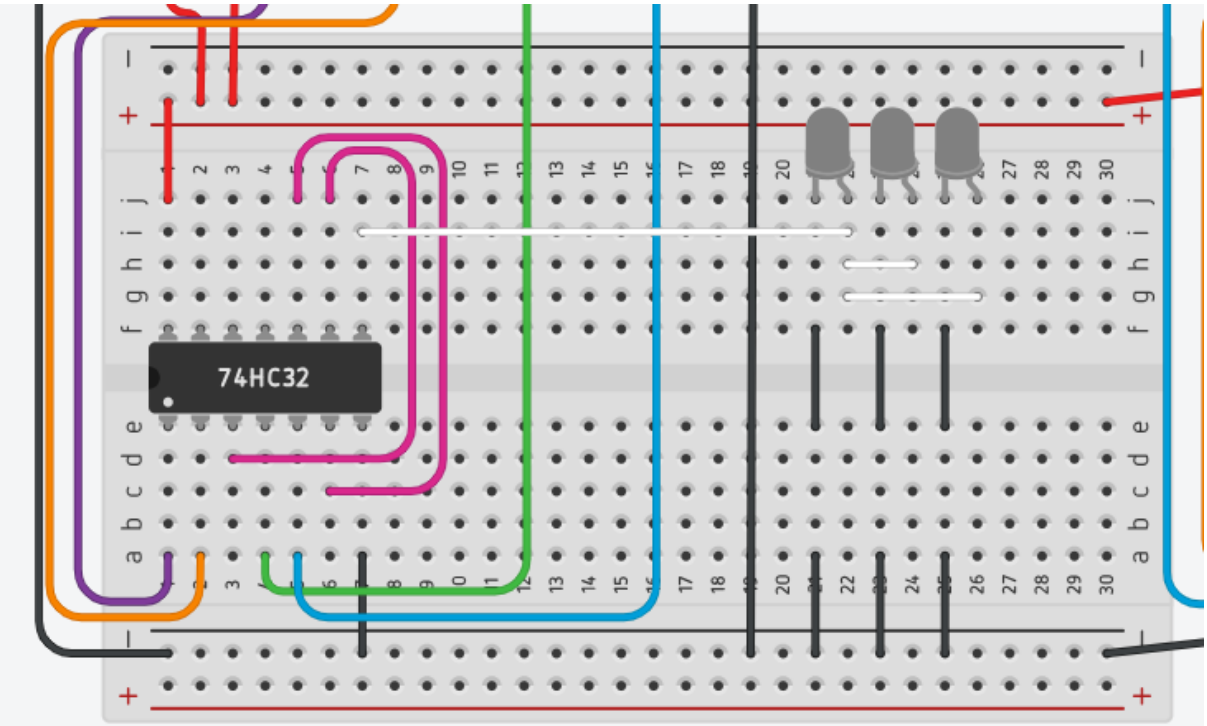

Yellow Lights:

- ***Simplified Boolean:*** $(S_1 \oplus S_2)(S_3 \oplus S_4) + S_1S_2S'_3S'_4 + S'_1S'_2S_3S_4$
- ***Gates Used: 1x*** *Quad OR, 1x Quad XOR, 1x Quad AND, 1x Dual 4-input AND*

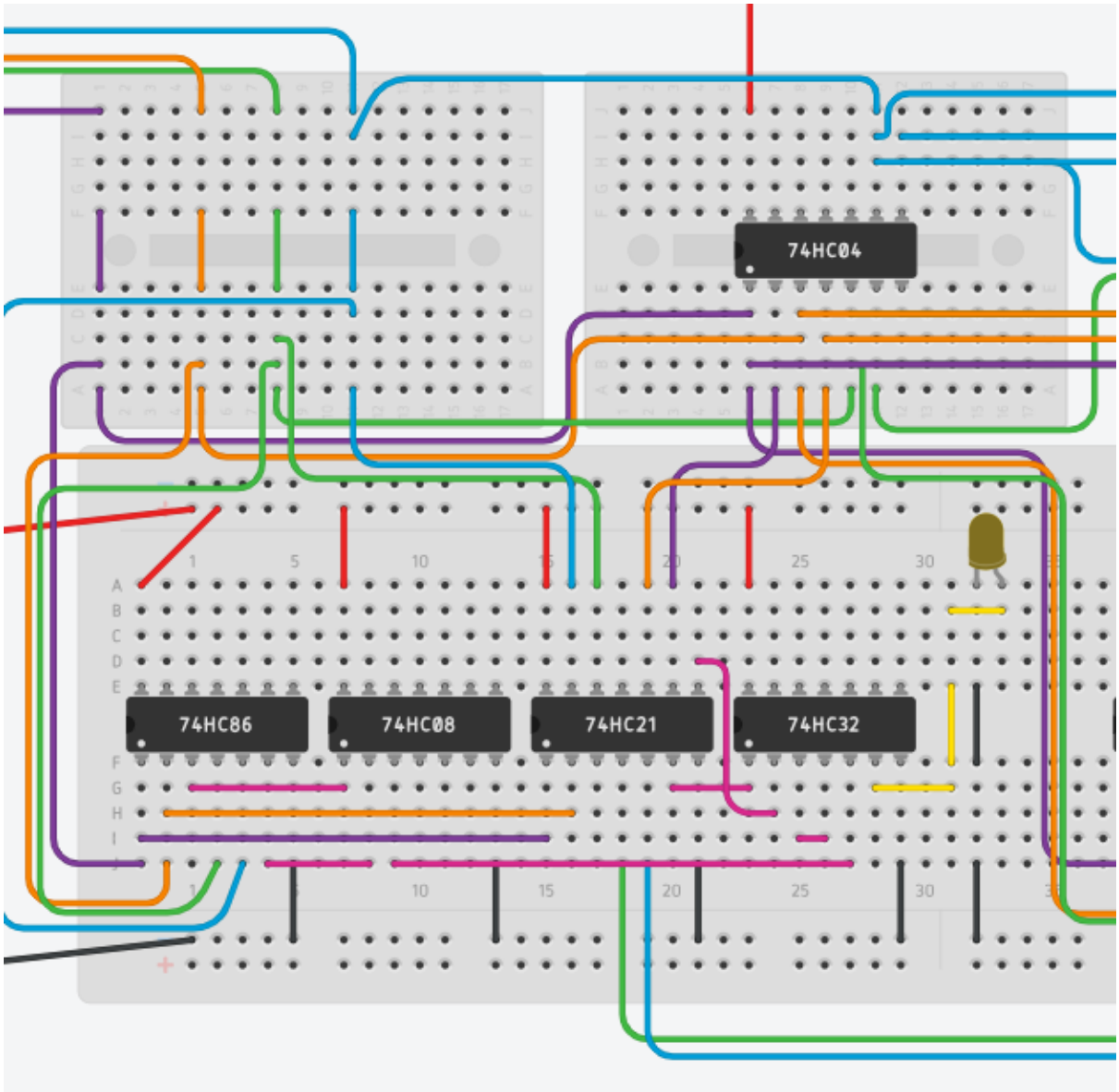

LED 1:

- ***Simplified Boolean:*** $S_1 \oplus S_2 \oplus S_3 \oplus S_4$
- ***Gates Used:*** *1x Quad XOR*

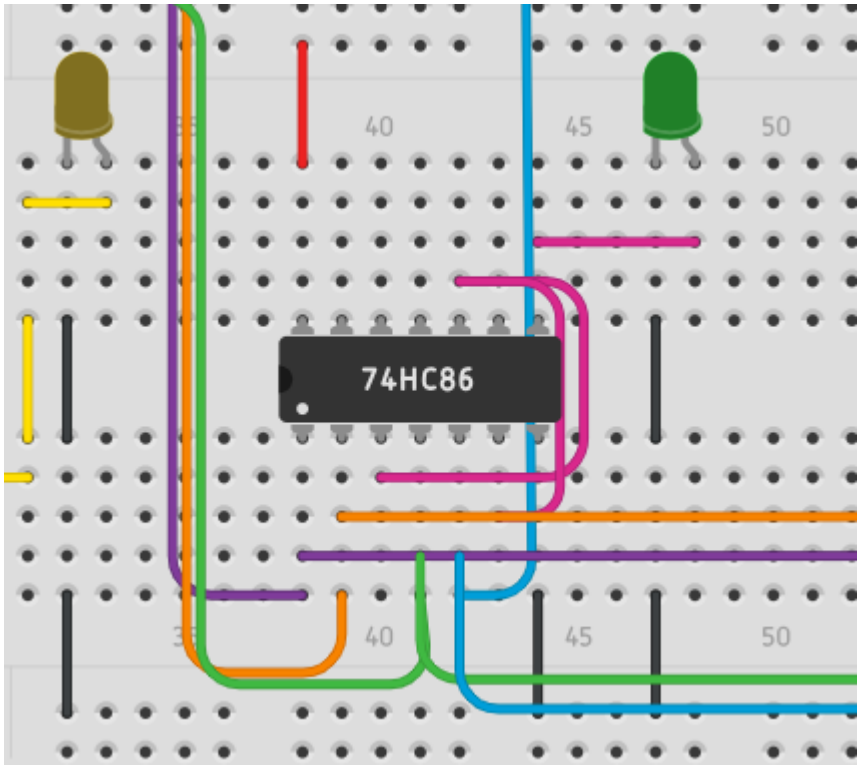

LED 2:

- ***Simplified Boolean:*** $S_1'S_3S_4 + S_1'S_2S_4 + S_2S_3S_4' + S_1S_3S_4' + S_1S_2S_3' + S_1S_2'S_4$
- ***Gates Used:*** *2x Triple 3-input AND gate, 2x Quad OR Gate.*

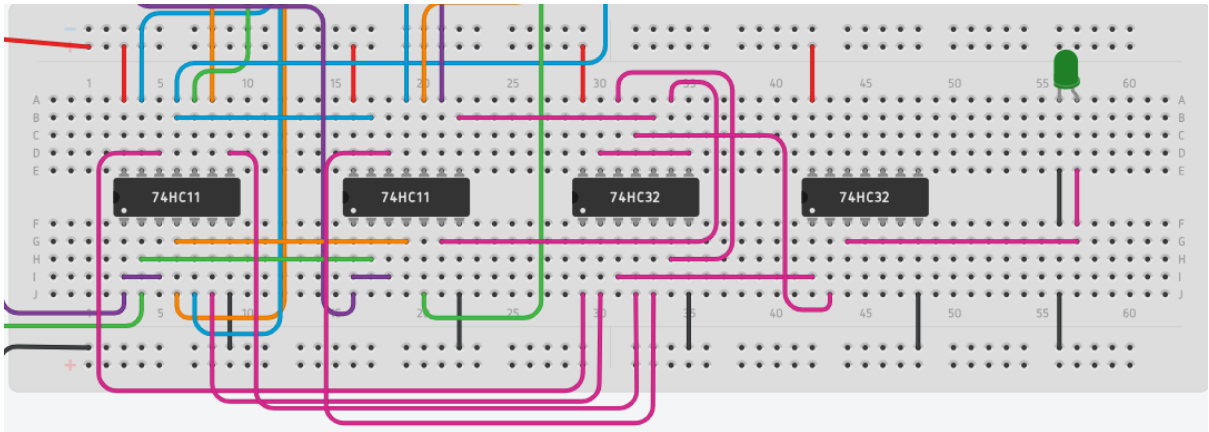

LED 3:

- ***Simplified Boolean:*** $S_1S_2S_3S_4$
- ***Gates Used:*** *1x Dual 4-input AND*

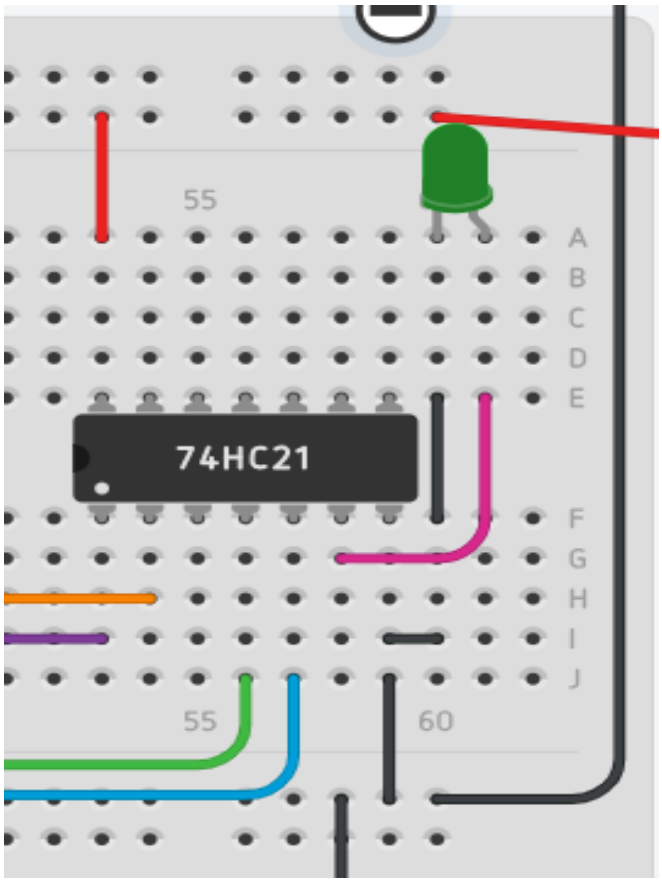

➢ References:

All our work mainly comes from what we have accomplished in both Phase 1 and Phase 2, Our circuits follow the truth table we have submitted in Phase 1, with no exceptions.

Truth Table of Phase 1

S1	S2	S3	S4	White Lights (W)	Yellow Light (Y)	L_3	L_2	L_1
0	0	0	0	0	0	0	0	0
0	0	0	1	1	0	0	0	1
0	0	1	0	1	0	0	0	1
0	0	1	1	1	1	0	1	0
0	1	0	0	1	0	0	0	1
0	1	0	1	1	1	0	1	0
0	1	1	0	1	1	0	1	0
0	1	1	1	1	0	0	1	1
1	0	0	0	1	0	0	0	1
1	0	0	1	1	1	0	1	0
1	0	1	0	1	1	0	1	0
1	0	1	1	1	0	0	1	1
1	1	0	0	1	1	0	1	0
1	1	0	1	1	0	0	1	1
1	1	1	0	1	0	0	1	1
1	1	1	1	1	0	1	0	0