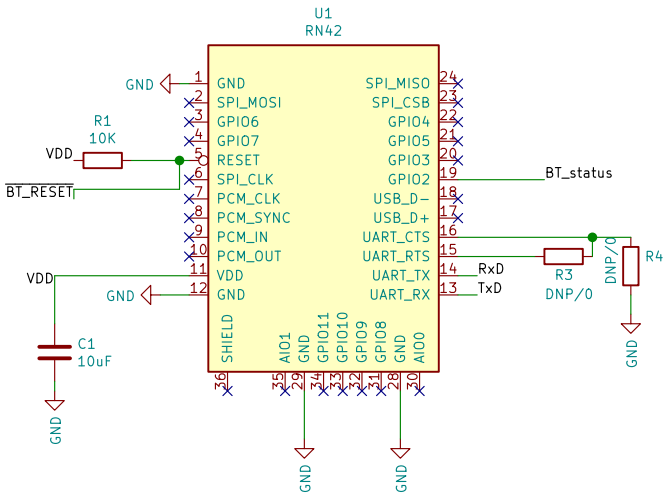

Bluetooth: RN−42 with UART

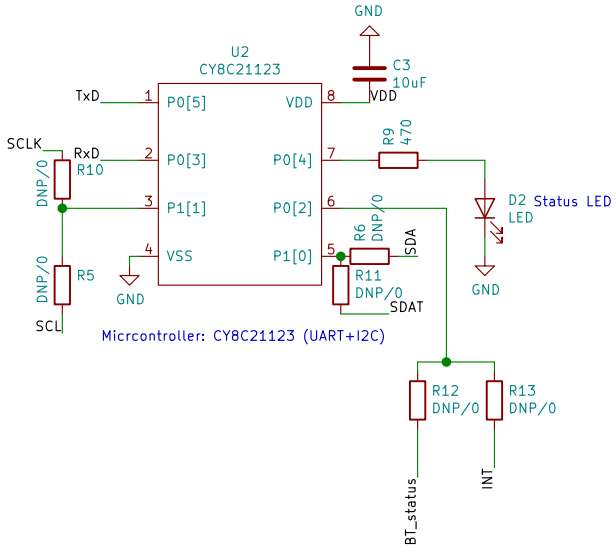

Micrcontroller: CY8C21123 (UART+I2C)

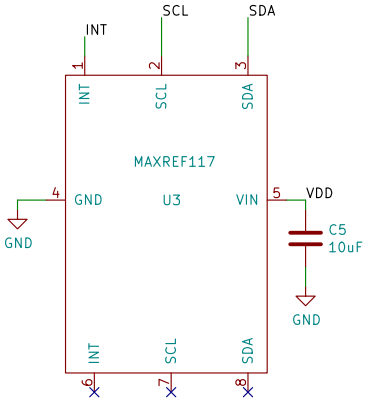

Pulse Oximeter IC: I2C

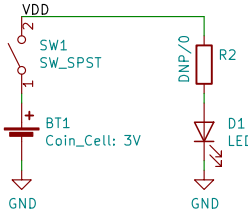

Coin cell battery with power status with LED

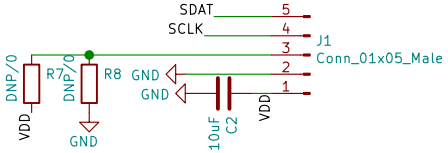

Programmer: ISSP (ref: PSOC miniprog3 Program and Debug Kit)

Sheet: /
File: ppg.sch

Title:

Size: A4	Date:	Rev:
KiCad E.D.A. kicad (5.0.2)−1		Id: 1/1