FlashAttention

Danyang Zhuo

Duke University

Some materials are from Hao Zhang's slides

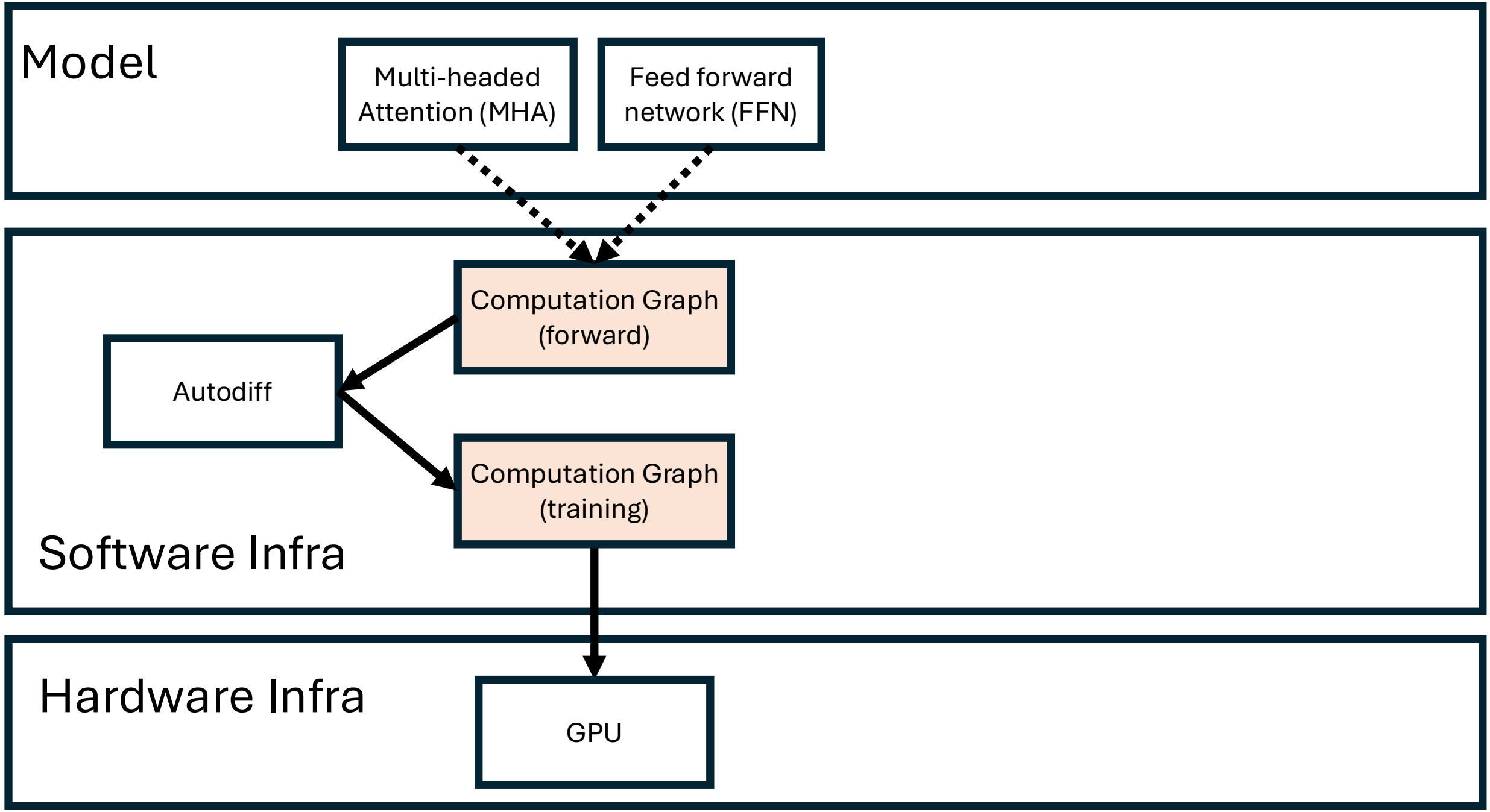
Model
Multi-headed Attention (MHA)
Feed forward network (FFN)
Computation Graph (forward)
Autodiff
Computation Graph (training)
Software Infra
Hardware Infra
GPU

Matmul kernel

- Compute Q, K, V from input X
  - Q = X W_q
  - K = X W_k
  - V = X W_v

- Compute projection Y
  - Y = O W_o

- FFN

Matmul + Bias + ReLU

- Matmul
  - Input: N * N + N * N
  - Output: N *N
- Bias
  - Input: N * N + N * N
  - Output: N * N
- ReLU
  - Input: N * N
  - Output: N * N

Fused(Matmul+Bias + ReLU)

- Matmul + Bias + ReLU
  - Input: N * N + N * N + N * N
  - Output: N *N

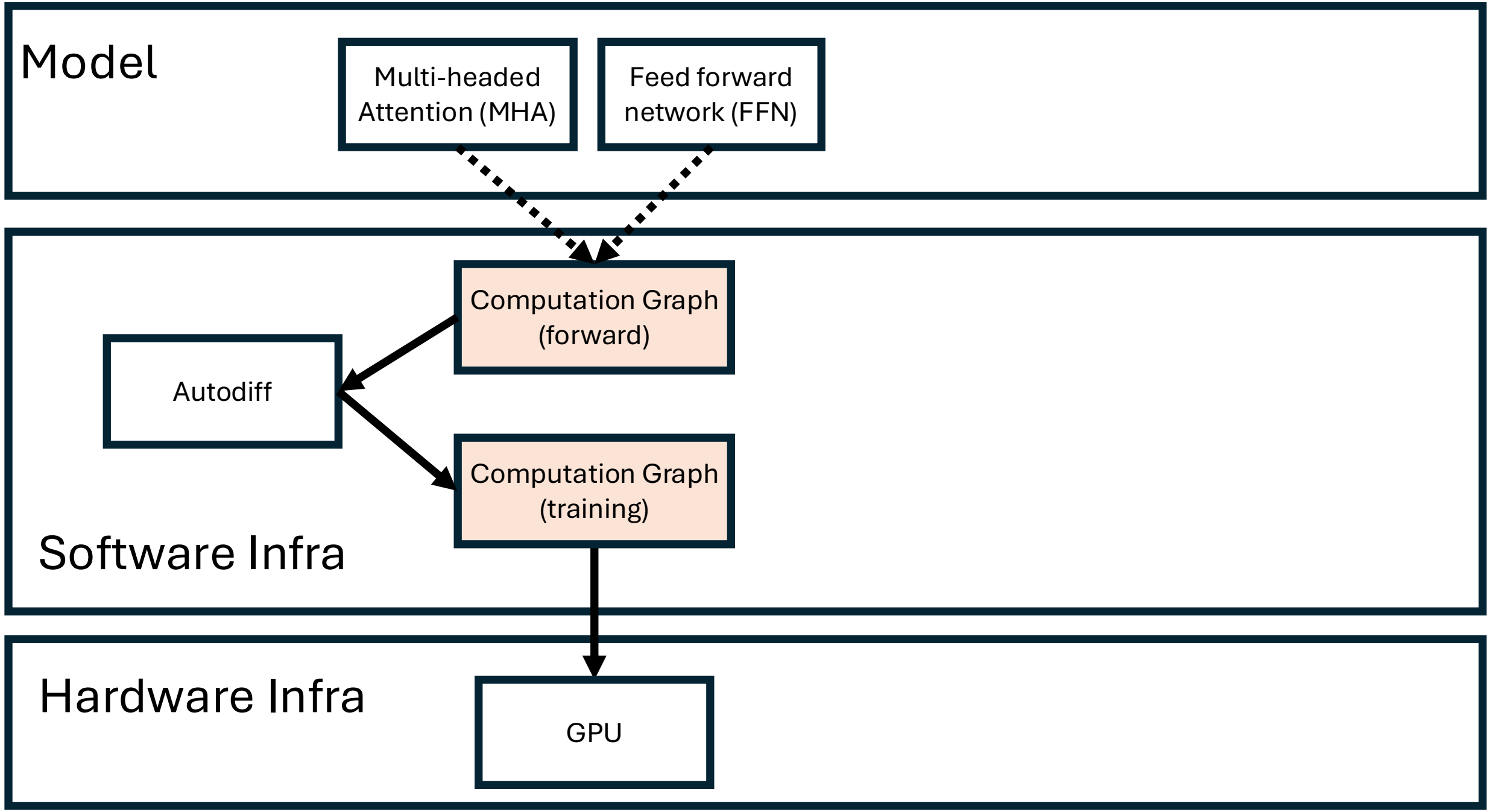
Model
Multi-headed Attention (MHA)
Feed forward network (FFN)
Computation Graph (forward)
Autodiff
Computation Graph (training)
Software Infra
Hardware Infra
GPU

Given input sequences $\mathbf{Q}, \mathbf{K}, \mathbf{V} \in \mathbb{R}^{N \times d}$ where N is the sequence length and d is the head dimension, we want to compute the attention output $\mathbf{O} \in \mathbb{R}^{N \times d}$:

$$\mathbf{S} = \mathbf{Q}\mathbf{K}^\top \in \mathbb{R}^{N \times N}, \quad \mathbf{P} = \mathrm{softmax}(\mathbf{S}) \in \mathbb{R}^{N \times N}, \quad \mathbf{O} = \mathbf{P}\mathbf{V} \in \mathbb{R}^{N \times d},$$

where softmax is applied row-wise.

Algorithm 0 Standard Attention Implementation

Require: Matrices $\mathbf{Q}, \mathbf{K}, \mathbf{V} \in \mathbb{R}^{N \times d}$ in HBM.

1: Load $\mathbf{Q}, \mathbf{K}$ by blocks from HBM, compute $\mathbf{S} = \mathbf{Q}\mathbf{K}^\top$, write $\mathbf{S}$ to HBM.
2: Read $\mathbf{S}$ from HBM, compute $\mathbf{P} = \mathrm{softmax}(\mathbf{S})$, write $\mathbf{P}$ to HBM.
3: Load $\mathbf{P}$ and $\mathbf{V}$ by blocks from HBM, compute $\mathbf{O} = \mathbf{P}\mathbf{V}$, write $\mathbf{O}$ to HBM.
4: Return $\mathbf{O}$.

Given input sequences $\mathbf{Q}, \mathbf{K}, \mathbf{V} \in \mathbb{R}^{N \times d}$ where N is the sequence length and d is the head dimension, we want to compute the attention output $\mathbf{O} \in \mathbb{R}^{N \times d}$:

$$\mathbf{S} = \mathbf{Q}\mathbf{K}^\top \in \mathbb{R}^{N \times N}, \quad \mathbf{P} = \mathrm{softmax}(\mathbf{S}) \in \mathbb{R}^{N \times N}, \quad \mathbf{O} = \mathbf{P}\mathbf{V} \in \mathbb{R}^{N \times d},$$

where softmax is applied row-wise.

Algorithm 0 Standard Attention Implementation

Require: Matrices $\mathbf{Q}, \mathbf{K}, \mathbf{V} \in \mathbb{R}^{N \times d}$ in HBM.

1: Load $\mathbf{Q}, \mathbf{K}$ by blocks from HBM, compute $\mathbf{S} = \mathbf{Q}\mathbf{K}^\top$, write $\mathbf{S}$ to HBM.
2: Read $\mathbf{S}$ from HBM, compute $\mathbf{P} = \mathrm{softmax}(\mathbf{S})$, write $\mathbf{P}$ to HBM.
3: Load $\mathbf{P}$ and $\mathbf{V}$ by blocks from HBM, compute $\mathbf{O} = \mathbf{P}\mathbf{V}$, write $\mathbf{O}$ to HBM.
4: Return $\mathbf{O}$.

Analysis

Algorithm 0 Standard Attention Implementation

Require: Matrices $\mathbf{Q}, \mathbf{K}, \mathbf{V} \in \mathbb{R}^{N \times d}$ in HBM.

1: Load $\mathbf{Q}, \mathbf{K}$ by blocks from HBM, compute $\mathbf{S} = \mathbf{Q}\mathbf{K}^\top$, write $\mathbf{S}$ to HBM.
2: Read $\mathbf{S}$ from HBM, compute $\mathbf{P} = \mathrm{softmax}(\mathbf{S})$, write $\mathbf{P}$ to HBM.
3: Load $\mathbf{P}$ and $\mathbf{V}$ by blocks from HBM, compute $\mathbf{O} = \mathbf{P}\mathbf{V}$, write $\mathbf{O}$ to HBM.
4: Return $\mathbf{O}$.

- Compute = O(N^2 * d + N^2 + N^2 * d) = O(N^2 * d)
- IO = O (N * d + N^2 + N^2 + N*d) = O(N^2 + N*d)

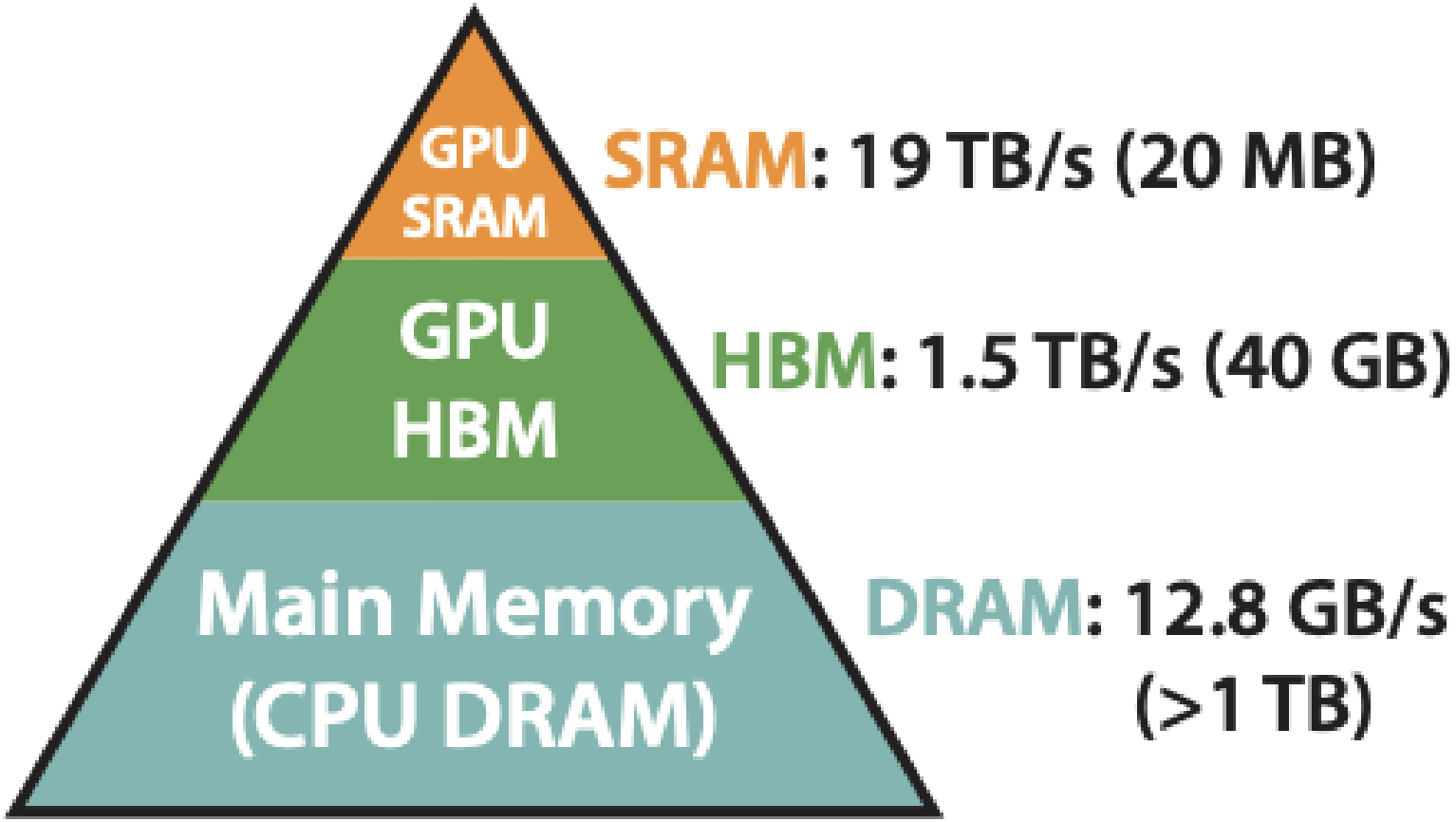

Memory Hierarchy with Bandwidth & Memory Size

- 2019
  - GPT-2 (OpenAI), N = 1024, d = 64
- 2020
  - GPT-3 (OpenAI), N = 2048, d = 128
- 2023
  - Llama2 (Meta), N = 4096, d =128
- 2024
  - Llama3 (Meta), N = 8196, d = 128
- 2025
  - Qwen3 (Alibaba), N = 32K, d = 128

- 2020
  - A100, M = 192KB, B = 1.5TB/s
- 2022
  - H100, M = 256KB, B = 3.0 TB/s
- 2025
  - B200, M= ~227KB, B = 8.0TB/s

- Assuming Llama 2, N * d * 2 Byte (float16) = 1MB
- N * N * 2 Bytes (float 16) = 33.6MB

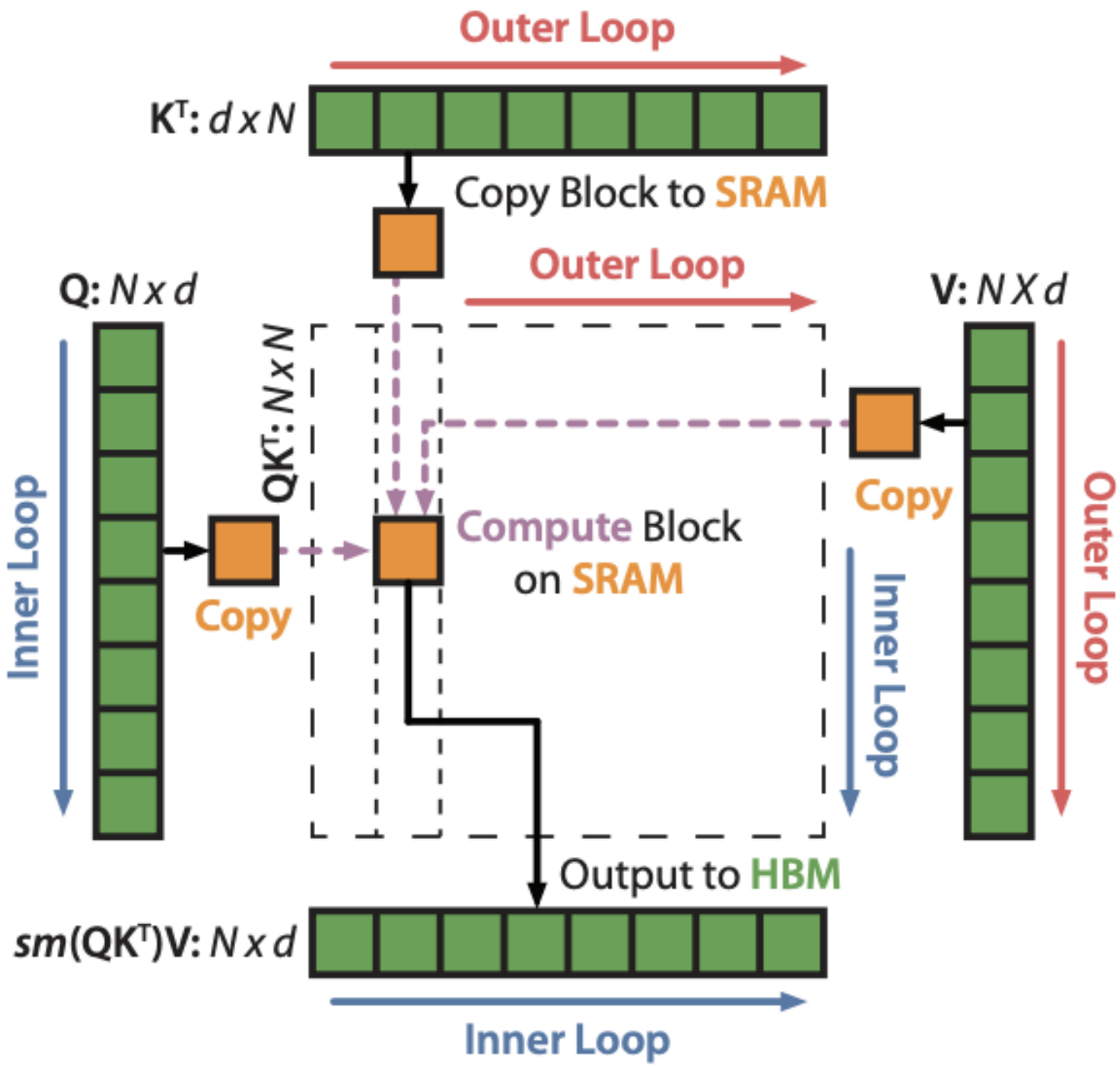

FlashAttention

How to Implement Softmax

Algorithm 1 Naive softmax

$d_0 \leftarrow 0$
for $j \leftarrow 1, V$ **do**
    $d_j \leftarrow d_{j-1} + e^{x_j}$
end for
for $i \leftarrow 1, V$ **do**
    $y_i \leftarrow \frac{e^{x_i}}{d_V}$
end for

Problem

- Can easily go overflow because of sum (e^x)

Safe Softmax

$$y_i = \frac{e^{x_i - \max_{k=1}^{V} x_k}}{\sum_{j=1}^{V} e^{x_j - \max_{k=1}^{V} x_k}}$$

Algorithm 2 Safe softmax

```
m_0 ← −∞
for k ← 1, V do
    m_k ← max(m_{k−1}, x_k)
end for
d_0 ← 0
for j ← 1, V do
    d_j ← d_{j−1} + e^{x_j − m_V}
end for
for i ← 1, V do
    y_i ← e^{x_i − m_V} / d_V
end for
```

Can we fuse?

Create alternative sequence

$$d'_i := \sum_{j=1}^{i} e^{x_j - m_i}$$

With:

$$d'_V = d_V$$

Algorithm 2 Safe softmax

$m_0 \leftarrow -\infty$
for $k \leftarrow 1, V$ **do**
    $m_k \leftarrow \max(m_{k-1}, x_k)$
end for
$d_0 \leftarrow 0$
for $j \leftarrow 1, V$ **do**
    $d_j \leftarrow d_{j-1} + e^{x_j - m_V}$
end for
for $i \leftarrow 1, V$ **do**
    $y_i \leftarrow \frac{e^{x_i - m_V}}{d_V}$
end for

Further Note:

Create alternative sequence

$$d'_i := \sum_{j=1}^{i} e^{x_j - m_i}$$

With:

$$d'_V = d_V$$

The sequence exhibits recurrence

$$\begin{aligned} d'_i &= \sum_{j=1}^{i} e^{x_j - m_i} \\ &= \left(\sum_{j=1}^{i-1} e^{x_j - m_i} \right) + e^{x_i - m_i} \\ &= \left(\sum_{j=1}^{i-1} e^{x_j - m_{i-1}} \right) e^{m_{i-1} - m_i} + e^{x_i - m_i} \\ &= d'_{i-1} e^{m_{i-1} - m_i} + e^{x_i - m_i} \end{aligned}$$

Online, Safe Softmax

Algorithm 3 Safe softmax with online normalizer calculation

$m_0 \leftarrow -\infty$
$d_0 \leftarrow 0$
for $j \leftarrow 1, V$ **do**
    $m_j \leftarrow \max(m_{j-1}, x_j)$
    $d_j \leftarrow d_{j-1} \times e^{m_{j-1}-m_j} + e^{x_j - m_j}$
end for
for $i \leftarrow 1, V$ **do**
    $y_i \leftarrow \frac{e^{x_i - m_V}}{d_V}$
end for

Q： can we further fuse these two loops?

Self attention v2: with Online Safe Softmax

NOTATIONS

$Q[k,:]$: the k-th row vector of Q matrix.

$K^T[:,i]$: the i-th column vector of K^T matrix.

$O[k,:]$: the k-th row of output O matrix.

$V[i,:]$: the i-th row of V matrix.

$\{\boldsymbol{o}_i\}$: $\sum_{j=1}^{i} a_j V[j,:]$, a row vector storing partial aggregation result $A[k,:i] \times V[:i,:]$

BODY

for $i \leftarrow 1, N$ **do**

$$
\begin{aligned}
x_i &\leftarrow Q[k,:]\, K^T[:,i] \\
m_i &\leftarrow \max(m_{i-1}, x_i) \\
d'_i &\leftarrow d'_{i-1}\, e^{m_{i-1}-m_i} + e^{x_i - m_i}
\end{aligned}
$$

end

for $i \leftarrow 1, N$ **do**

$$
\begin{aligned}
a_i &\leftarrow \frac{\boxed{e^{x_i}}^{-m_N}}{d'_N} \\
\boldsymbol{o}_i &\leftarrow \boldsymbol{o}_{i-1} + a_i V[i,:]
\end{aligned}
$$

end

$$O[k,:] \leftarrow \boldsymbol{o}_N$$

Q1: can we further fuse these two loops?

Q2: How to get x_i?

Self attention

NOTATIONS

$Q[k,:]$: the k-th row vector of Q matrix.
$K^T[:,i]$: the i-th column vector of K^T matrix.
$O[k,:]$: the k-th row of output O matrix.
$V[i,:]$: the i-th row of V matrix.
$\{\boldsymbol{o}_i\}$: $\sum_{j=1}^{i} a_j V[j,:]$, a row vector storing partial aggregation result $A[k,:i] \times V[:i,:]$

BODY

for $i \leftarrow 1, N$ **do**

$$
\begin{aligned}
x_i &\leftarrow Q[k,:]\, K^T[:,i] \\
m_i &\leftarrow \max(m_{i-1}, x_i) \\
d'_i &\leftarrow d'_{i-1}\, e^{m_{i-1}-m_i} + e^{x_i - m_i}
\end{aligned}
$$

end

for $i \leftarrow 1, N$ **do**

$$
\begin{aligned}
a_i &\leftarrow \frac{e^{x_i - m_N}}{d'_N} \\
\boxed{\boldsymbol{o}_i} &\leftarrow \boldsymbol{o}_{i-1} + a_i V[i,:]
\end{aligned}
$$

end

$$O[k,:] \leftarrow \boldsymbol{o}_N$$

$$\boldsymbol{o}_i := \sum_{j=1}^{i} \left(\frac{e^{x_j - m_N}}{d'_N} V[j,:] \right)$$

Create alternative sequence with $o_N = o'_N$

$$\boldsymbol{o}'_i := \left(\sum_{j=1}^{i} \frac{e^{x_j - m_i}}{d'_i} V[j,:] \right)$$

in self attention, we just want o, not a

Derive the Recurrence

$$
\begin{aligned}
\boldsymbol{o}'_i &= \sum_{j=1}^{i} \frac{e^{x_j - m_i}}{d'_i} V[j,:] \\
&= \left(\sum_{j=1}^{i-1} \frac{e^{x_j - m_i}}{d'_i} V[j,:] \right) + \frac{e^{x_i - m_i}}{d'_i} V[i,:] \\
&= \left(\sum_{j=1}^{i-1} \frac{e^{x_j - m_{i-1}}}{d'_{i-1}} \frac{e^{x_j - m_i}}{e^{x_j - m_{i-1}}} \frac{d'_{i-1}}{d'_i} V[j,:] \right) + \frac{e^{x_i - m_i}}{d'_i} V[i,:] \\
&= \left(\sum_{j=1}^{i-1} \frac{e^{x_j - m_{i-1}}}{d'_{i-1}} V[j,:] \right) \frac{d'_{i-1}}{d'_i} e^{m_{i-1} - m_i} + \frac{e^{x_i - m_i}}{d'_i} V[i,:] \\
&= \boldsymbol{o}'_{i-1} \frac{d'_{i-1} e^{m_{i-1} - m_i}}{d'_i} + \frac{e^{x_i - m_i}}{d'_i} V[i,:]
\end{aligned}
$$

Insight: o'_i only depends on:

$o'_{i-1}, d'_{i-1}, d'_i, m_i, m_{i-1}$

Softmax

Tiling. We compute attention by blocks. Softmax couples columns of $\mathbf{K}$, so we decompose the large softmax with scaling [51, 60, 66]. For numerical stability, the softmax of vector $x \in \mathbb{R}^B$ is computed as:

$$m(x) := \max_i \; x_i, \quad f(x) := \left[e^{x_1 - m(x)} \quad \dots \quad e^{x_B - m(x)}\right], \quad \ell(x) := \sum_i f(x)_i, \quad \mathrm{softmax}(x) := \frac{f(x)}{\ell(x)}.$$

For vectors $x^{(1)}, x^{(2)} \in \mathbb{R}^B$, we can decompose the softmax of the concatenated $x = \left[x^{(1)} \; x^{(2)}\right] \in \mathbb{R}^{2B}$ as:

$$m(x) = m(\left[x^{(1)} \; x^{(2)}\right]) = \max(m(x^{(1)}), m(x^{(2)})), \quad f(x) = \left[e^{m(x^{(1)}) - m(x)} f(x^{(1)}) \quad e^{m(x^{(2)}) - m(x)} f(x^{(2)})\right],$$

$$\ell(x) = \ell(\left[x^{(1)} \; x^{(2)}\right]) = e^{m(x^{(1)}) - m(x)} \ell(x^{(1)}) + e^{m(x^{(2)}) - m(x)} \ell(x^{(2)}), \quad \mathrm{softmax}(x) = \frac{f(x)}{\ell(x)}.$$

Finally: Flash Attention

1. we only read x_1 (Q, K) once
2. We never materialize the full S
3. we never materialize the full a (softmax(S))

for $i \leftarrow 1, N$ **do**

$$
\begin{aligned}
x_i &\leftarrow Q[k,:]\, K^T[:,i] \\
m_i &\leftarrow \max\left(m_{i-1}, x_i\right) \\
d'_i &\leftarrow d'_{i-1}\, e^{m_{i-1}-m_i} + e^{x_i - m_i} \\
\boldsymbol{o}'_i &\leftarrow \boldsymbol{o}'_{i-1} \frac{d'_{i-1}\, e^{m_{i-1}-m_i}}{d'_i} + \frac{e^{x_i - m_i}}{d'_i} V[i,:]
\end{aligned}
$$

end

$$O[k,:] \leftarrow \boldsymbol{o}'_N$$

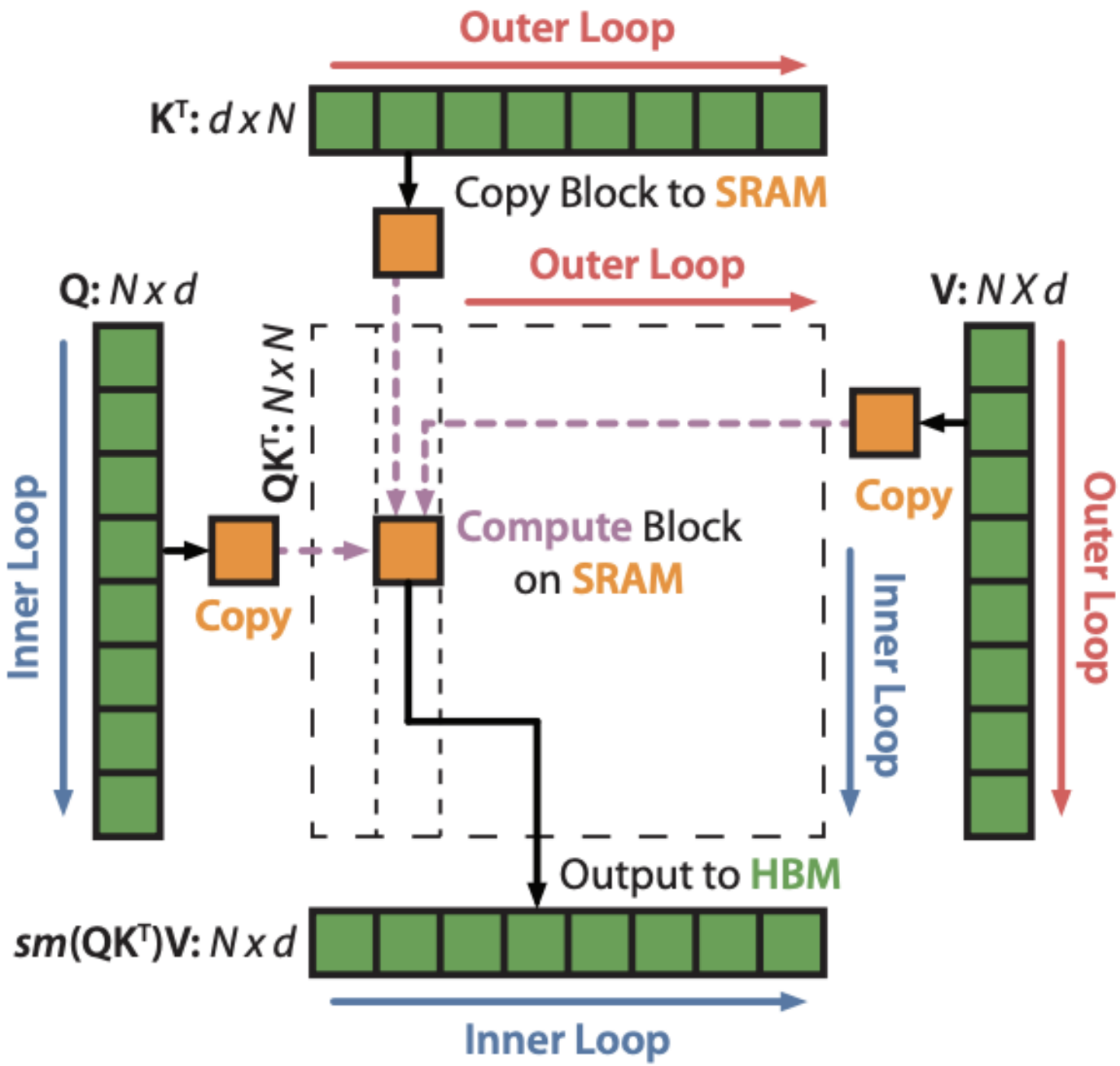

FlashAttention

Algorithm 1 FlashAttention

Require: Matrices $\mathbf{Q}, \mathbf{K}, \mathbf{V} \in \mathbb{R}^{N \times d}$ in HBM, on-chip SRAM of size M.

Set block sizes $B_c = \left\lceil \frac{M}{4d} \right\rceil, B_r = \min\left(\left\lceil \frac{M}{4d} \right\rceil, d\right)$.

Initialize $\mathbf{O} = (0)_{N \times d} \in \mathbb{R}^{N \times d}, \ell = (0)_N \in \mathbb{R}^N, m = (-\infty)_N \in \mathbb{R}^N$ in HBM.

Divide $\mathbf{Q}$ into $T_r = \left\lceil \frac{N}{B_r} \right\rceil$ blocks $\mathbf{Q}_1, \dots, \mathbf{Q}_{T_r}$ of size $B_r \times d$ each, and divide $\mathbf{K}, \mathbf{V}$ in to $T_c = \left\lceil \frac{N}{B_c} \right\rceil$ blocks $\mathbf{K}_1, \dots, \mathbf{K}_{T_c}$ and $\mathbf{V}_1, \dots, \mathbf{V}_{T_c}$, of size $B_c \times d$ each.

Divide $\mathbf{O}$ into T_r blocks $\mathbf{O}_i, \dots, \mathbf{O}_{T_r}$ of size $B_r \times d$ each, divide ℓ into T_r blocks $\ell_i, \dots, \ell_{T_r}$ of size B_r each, divide m into T_r blocks $m_1, \dots, m_{T_r}$ of size B_r each.

for $1 \le j \le T_c$ **do**

  Load $\mathbf{K}_j, \mathbf{V}_j$ from HBM to on-chip SRAM.

  for $1 \le i \le T_r$ **do**

    Load $\mathbf{Q}_i, \mathbf{O}_i, \ell_i, m_i$ from HBM to on-chip SRAM.

    On chip, compute $\mathbf{S}_{ij} = \mathbf{Q}_i \mathbf{K}_j^T \in \mathbb{R}^{B_r \times B_c}$.

    On chip, compute $\tilde{m}_{ij} = \mathrm{rowmax}(\mathbf{S}_{ij}) \in \mathbb{R}^{B_r}$, $\tilde{\mathbf{P}}_{ij} = \exp(\mathbf{S}_{ij} - \tilde{m}_{ij}) \in \mathbb{R}^{B_r \times B_c}$ (pointwise), $\tilde{\ell}_{ij} = \mathrm{rowsum}(\tilde{\mathbf{P}}_{ij}) \in \mathbb{R}^{B_r}$.

    On chip, compute $m_i^{\mathrm{new}} = \max(m_i, \tilde{m}_{ij}) \in \mathbb{R}^{B_r}$, $\ell_i^{\mathrm{new}} = e^{m_i - m_i^{\mathrm{new}}} \ell_i + e^{\tilde{m}_{ij} - m_i^{\mathrm{new}}} \tilde{\ell}_{ij} \in \mathbb{R}^{B_r}$.

    Write $\mathbf{O}_i \leftarrow \mathrm{diag}(\ell_i^{\mathrm{new}})^{-1} (\mathrm{diag}(\ell_i) e^{m_i - m_i^{\mathrm{new}}} \mathbf{O}_i + e^{\tilde{m}_{ij} - m_i^{\mathrm{new}}} \tilde{\mathbf{P}}_{ij} \mathbf{V}_j)$ to HBM.

    Write $\ell_i \leftarrow \ell_i^{\mathrm{new}}$, $m_i \leftarrow m_i^{\mathrm{new}}$ to HBM.

  end for

end for

Return $\mathbf{O}$.

Algorithm 1 FlashAttention

Require: Matrices $\mathbf{Q}, \mathbf{K}, \mathbf{V} \in \mathbb{R}^{N \times d}$ in HBM, on-chip SRAM of size M.

Set block sizes $B_c = \left\lceil \frac{M}{4d} \right\rceil, B_r = \min\left(\left\lceil \frac{M}{4d} \right\rceil, d\right)$.

Initialize $\mathbf{O} = (0)_{N \times d} \in \mathbb{R}^{N \times d}, \ell = (0)_N \in \mathbb{R}^N, m = (-\infty)_N \in \mathbb{R}^N$ in HBM.

Divide $\mathbf{Q}$ into $T_r = \left\lceil \frac{N}{B_r} \right\rceil$ blocks $\mathbf{Q}_1, \dots, \mathbf{Q}_{T_r}$ of size $B_r \times d$ each, and divide $\mathbf{K}, \mathbf{V}$ in to $T_c = \left\lceil \frac{N}{B_c} \right\rceil$ blocks $\mathbf{K}_1, \dots, \mathbf{K}_{T_c}$ and $\mathbf{V}_1, \dots, \mathbf{V}_{T_c}$, of size $B_c \times d$ each.

Divide $\mathbf{O}$ into T_r blocks $\mathbf{O}_i, \dots, \mathbf{O}_{T_r}$ of size $B_r \times d$ each, divide ℓ into T_r blocks $\ell_i, \dots, \ell_{T_r}$ of size B_r each, divide m into T_r blocks $m_1, \dots, m_{T_r}$ of size B_r each.

for $1 \le j \le T_c$ **do**

  Load $\mathbf{K}_j, \mathbf{V}_j$ from HBM to on-chip SRAM.

  for $1 \le i \le T_r$ **do**

    Load $\mathbf{Q}_i, \mathbf{O}_i, \ell_i, m_i$ from HBM to on-chip SRAM.

    On chip, compute $\mathbf{S}_{ij} = \mathbf{Q}_i \mathbf{K}_j^T \in \mathbb{R}^{B_r \times B_c}$.

    On chip, compute $\tilde{m}_{ij} = \mathrm{rowmax}(\mathbf{S}_{ij}) \in \mathbb{R}^{B_r}$, $\tilde{\mathbf{P}}_{ij} = \exp(\mathbf{S}_{ij} - \tilde{m}_{ij}) \in \mathbb{R}^{B_r \times B_c}$ (pointwise), $\tilde{\ell}_{ij} = \mathrm{rowsum}(\tilde{\mathbf{P}}_{ij}) \in \mathbb{R}^{B_r}$.

    On chip, compute $m_i^{\mathrm{new}} = \max(m_i, \tilde{m}_{ij}) \in \mathbb{R}^{B_r}$, $\ell_i^{\mathrm{new}} = e^{m_i - m_i^{\mathrm{new}}} \ell_i + e^{\tilde{m}_{ij} - m_i^{\mathrm{new}}} \tilde{\ell}_{ij} \in \mathbb{R}^{B_r}$.

    Write $\mathbf{O}_i \leftarrow \mathrm{diag}(\ell_i^{\mathrm{new}})^{-1} (\mathrm{diag}(\ell_i) e^{m_i - m_i^{\mathrm{new}}} \mathbf{O}_i + e^{\tilde{m}_{ij} - m_i^{\mathrm{new}}} \tilde{\mathbf{P}}_{ij} \mathbf{V}_j)$ to HBM.

    Write $\ell_i \leftarrow \ell_i^{\mathrm{new}}$, $m_i \leftarrow m_i^{\mathrm{new}}$ to HBM.

  end for

end for

Return $\mathbf{O}$.

Algorithm 1 FlashAttention

Require: Matrices $\mathbf{Q}, \mathbf{K}, \mathbf{V} \in \mathbb{R}^{N \times d}$ in HBM, on-chip SRAM of size M.

Set block sizes $B_c = \left\lceil \frac{M}{4d} \right\rceil, B_r = \min\left(\left\lceil \frac{M}{4d} \right\rceil, d\right)$.

Initialize $\mathbf{O} = (0)_{N \times d} \in \mathbb{R}^{N \times d}, \ell = (0)_N \in \mathbb{R}^N, m = (-\infty)_N \in \mathbb{R}^N$ in HBM.

Divide $\mathbf{Q}$ into $T_r = \left\lceil \frac{N}{B_r} \right\rceil$ blocks $\mathbf{Q}_1, \dots, \mathbf{Q}_{T_r}$ of size $B_r \times d$ each, and divide $\mathbf{K}, \mathbf{V}$ in to $T_c = \left\lceil \frac{N}{B_c} \right\rceil$ blocks $\mathbf{K}_1, \dots, \mathbf{K}_{T_c}$ and $\mathbf{V}_1, \dots, \mathbf{V}_{T_c}$, of size $B_c \times d$ each.

Divide $\mathbf{O}$ into T_r blocks $\mathbf{O}_i, \dots, \mathbf{O}_{T_r}$ of size $B_r \times d$ each, divide ℓ into T_r blocks $\ell_i, \dots, \ell_{T_r}$ of size B_r each, divide m into T_r blocks $m_1, \dots, m_{T_r}$ of size B_r each.

for $1 \le j \le T_c$ **do**

  Load $\mathbf{K}_j, \mathbf{V}_j$ from HBM to on-chip SRAM.

  for $1 \le i \le T_r$ **do**

    Load $\mathbf{Q}_i, \mathbf{O}_i, \ell_i, m_i$ from HBM to on-chip SRAM.

    On chip, compute $\mathbf{S}_{ij} = \mathbf{Q}_i \mathbf{K}_j^T \in \mathbb{R}^{B_r \times B_c}$.

    On chip, compute $\tilde{m}_{ij} = \mathrm{rowmax}(\mathbf{S}_{ij}) \in \mathbb{R}^{B_r}$, $\tilde{\mathbf{P}}_{ij} = \exp(\mathbf{S}_{ij} - \tilde{m}_{ij}) \in \mathbb{R}^{B_r \times B_c}$ (pointwise), $\tilde{\ell}_{ij} = \mathrm{rowsum}(\tilde{\mathbf{P}}_{ij}) \in \mathbb{R}^{B_r}$.

    On chip, compute $m_i^{\mathrm{new}} = \max(m_i, \tilde{m}_{ij}) \in \mathbb{R}^{B_r}$, $\ell_i^{\mathrm{new}} = e^{m_i - m_i^{\mathrm{new}}} \ell_i + e^{\tilde{m}_{ij} - m_i^{\mathrm{new}}} \tilde{\ell}_{ij} \in \mathbb{R}^{B_r}$.

    Write $\mathbf{O}_i \leftarrow \mathrm{diag}(\ell_i^{\mathrm{new}})^{-1} (\mathrm{diag}(\ell_i) e^{m_i - m_i^{\mathrm{new}}} \mathbf{O}_i + e^{\tilde{m}_{ij} - m_i^{\mathrm{new}}} \tilde{\mathbf{P}}_{ij} \mathbf{V}_j)$ to HBM.

    Write $\ell_i \leftarrow \ell_i^{\mathrm{new}}$, $m_i \leftarrow m_i^{\mathrm{new}}$ to HBM.

  end for

end for

Return $\mathbf{O}$.

Recomputation: Backward Pass

By storing softmax normalization factors from forward (size N), recompute attention in the backward from inputs in

Attention	Standard	FlashAttention
GFLOPs	66.6	75.2
Global mem access	40.3 GB	4.4 GB
Runtime	41.7 ms	7.3 ms

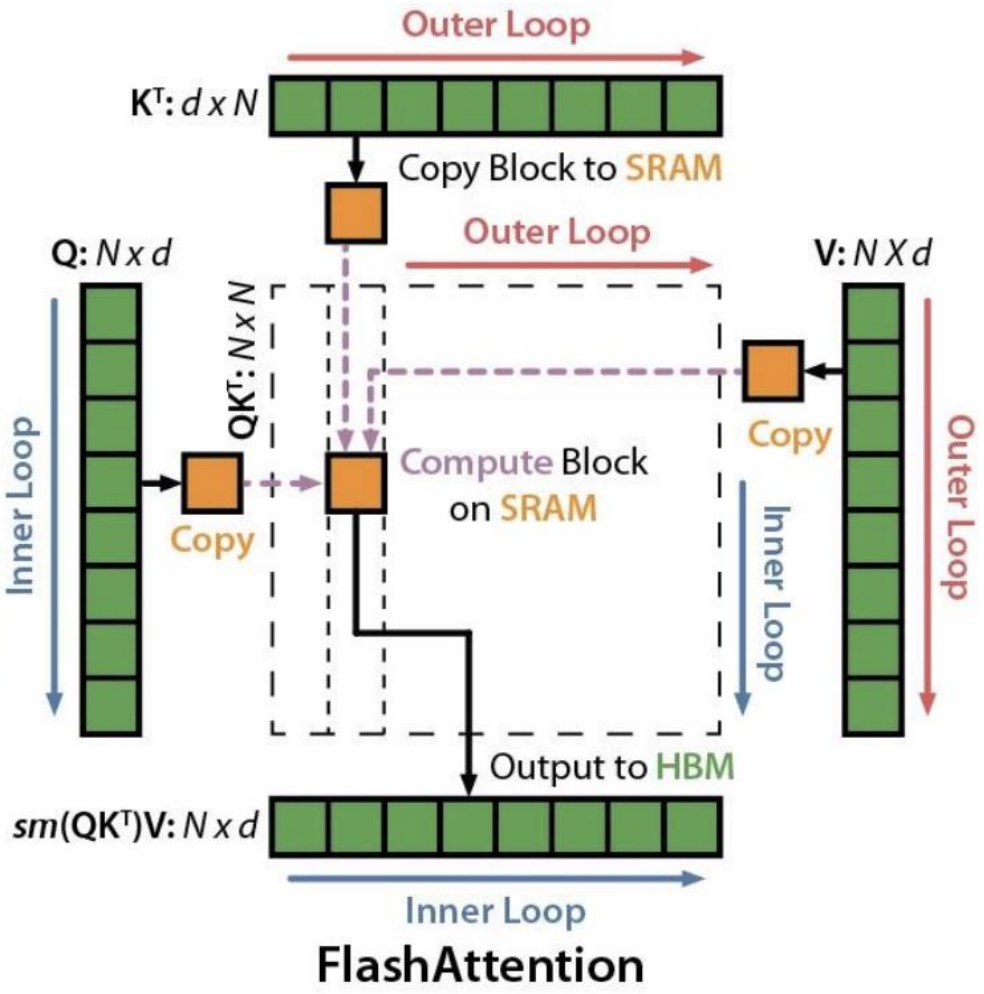

Speed up backward pass with with increased FLOPs!