TPU

Danyang Zhuo
Duke University

GPU generations

- Tesla (2006)
- Fermi (2010)
- Kepler (2012)
- Maxwell (2014)
- Pascall (2016): P100
- Volta (2017): V100
- Ampere (2020) : A100
- Hopper (2022): H100, H200
- Blackwell (2024): B100, B200

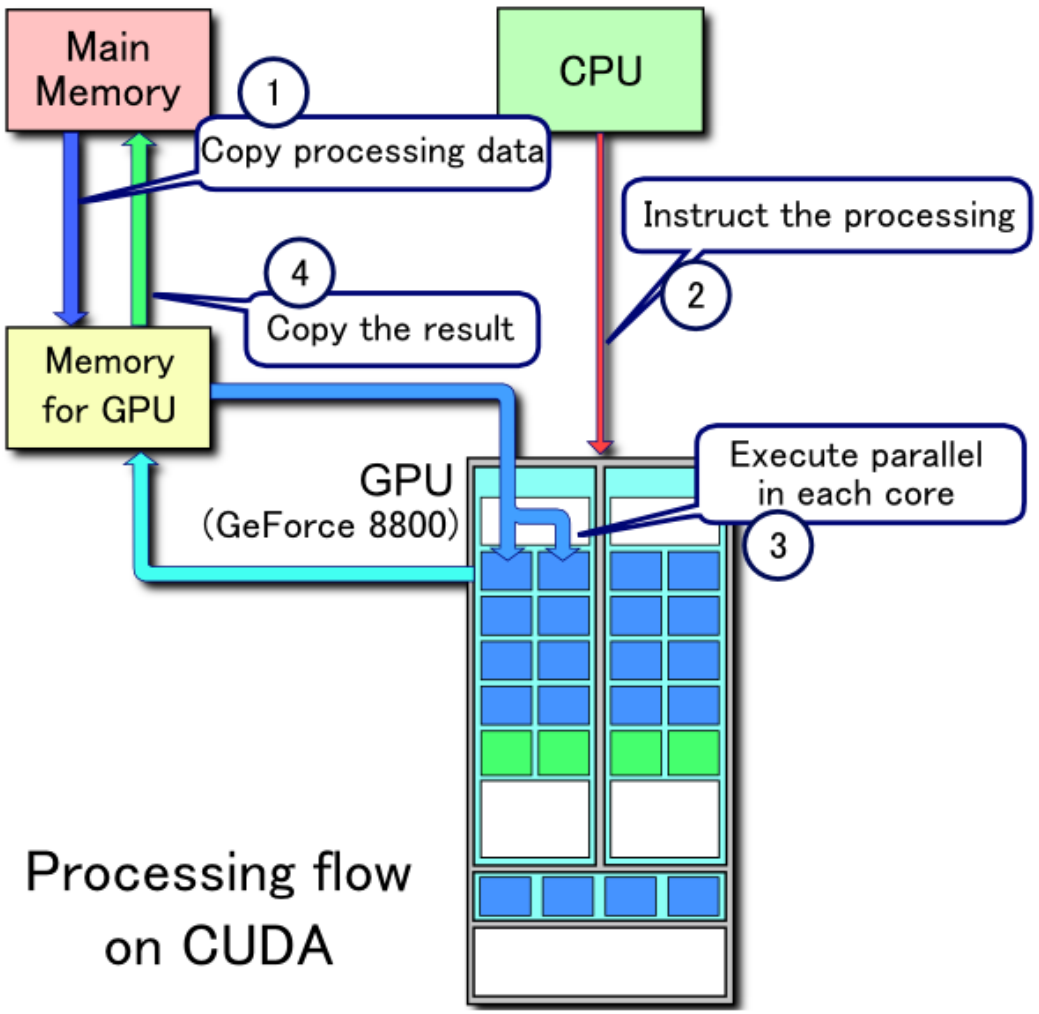

GPU generations

- Tesla (2006)
- Fermi (2010)
- Kepler (2012)
- Maxwell (2014)
- Pascall (2016): P100
- Volta (2017): V100
- Ampere (2020) : A100
- Hopper (2022): H100, H200
- Blackwell (2024): B100, B200

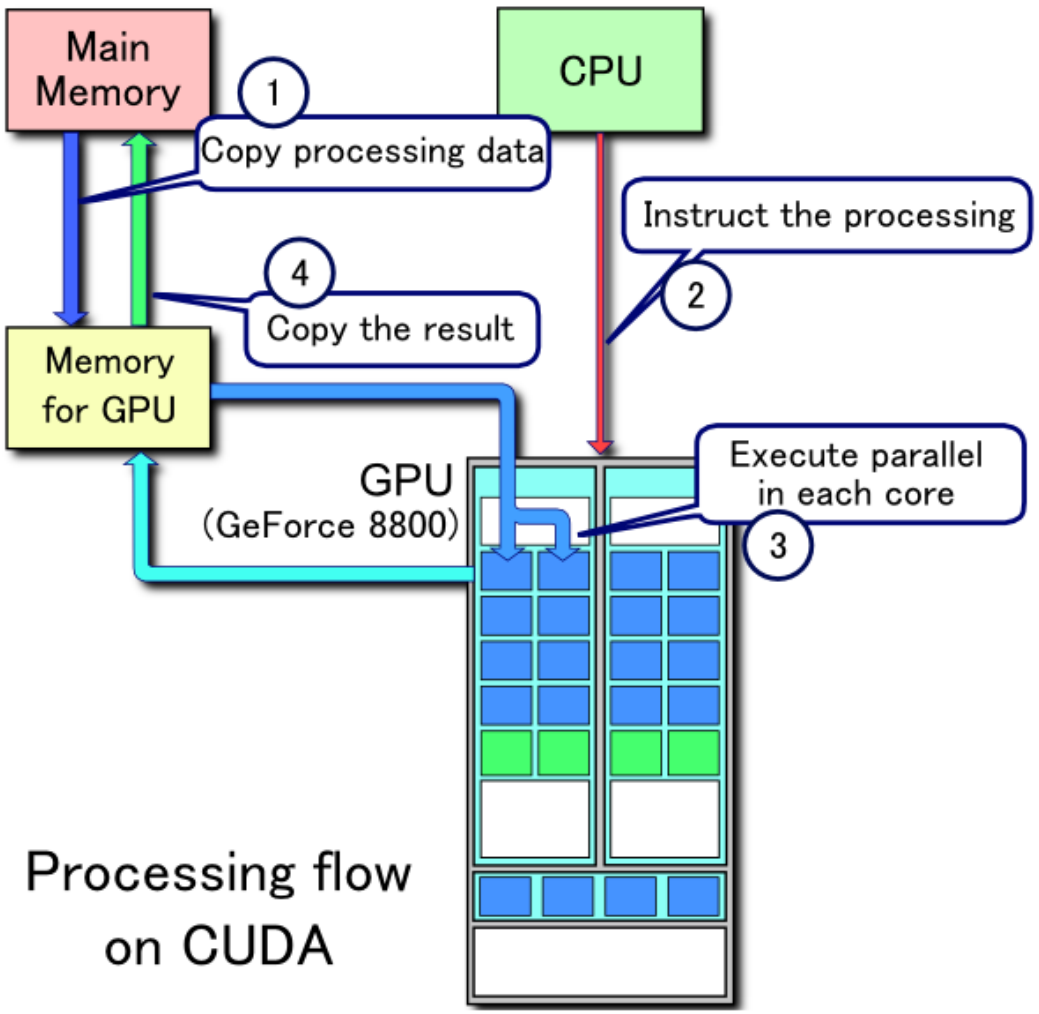

GPU generations

- Tesla (2006)
- Fermi (2010)
- Kepler (2012)
- Maxwell (2014)
- Pascall (2016): P100
- Volta (2017): V100
- Ampere (2020) : A100
- Hopper (2022): H100, H200
- Blackwell (2024): B100, B200

High Bandwidth Memory

NVLink

GPU generations

- Tesla (2006)
- Fermi (2010)
- Kepler (2012)
- Maxwell (2014)
- Pascall (2016): P100
- Volta (2017): V100
- Ampere (2020) : A100
- Hopper (2022): H100, H200
- Blackwell (2024): B100, B200

Tensor Cores

GPU generations

- Tesla (2006)
- Fermi (2010)
- Kepler (2012)
- Maxwell (2014)
- Pascall (2016): P100
- Volta (2017): V100
- Ampere (2020) : A100
- Hopper (2022): H100, H200
- Blackwell (2024): B100, B200

FP8

FP4

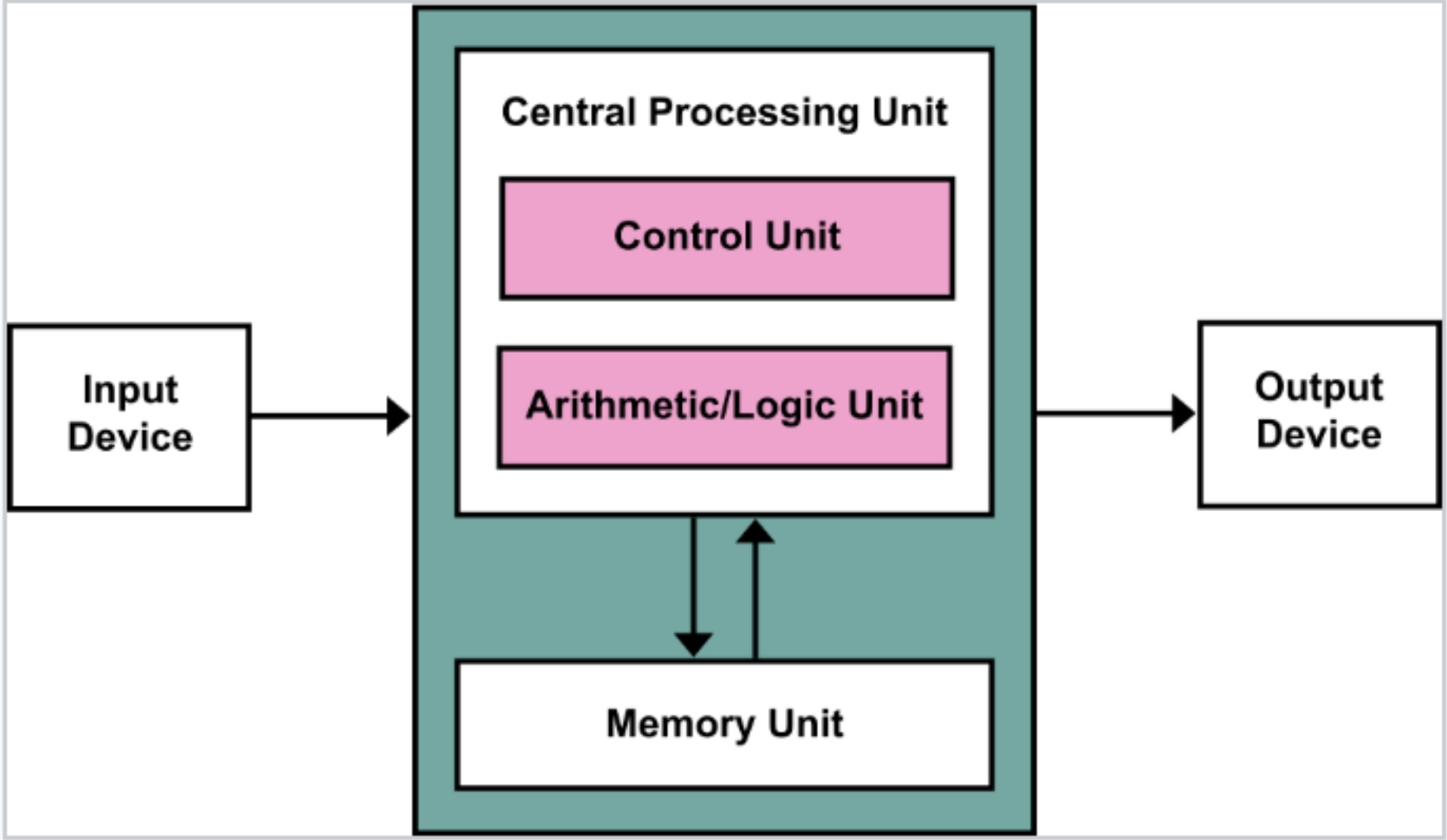

A von Neumann architecture scheme

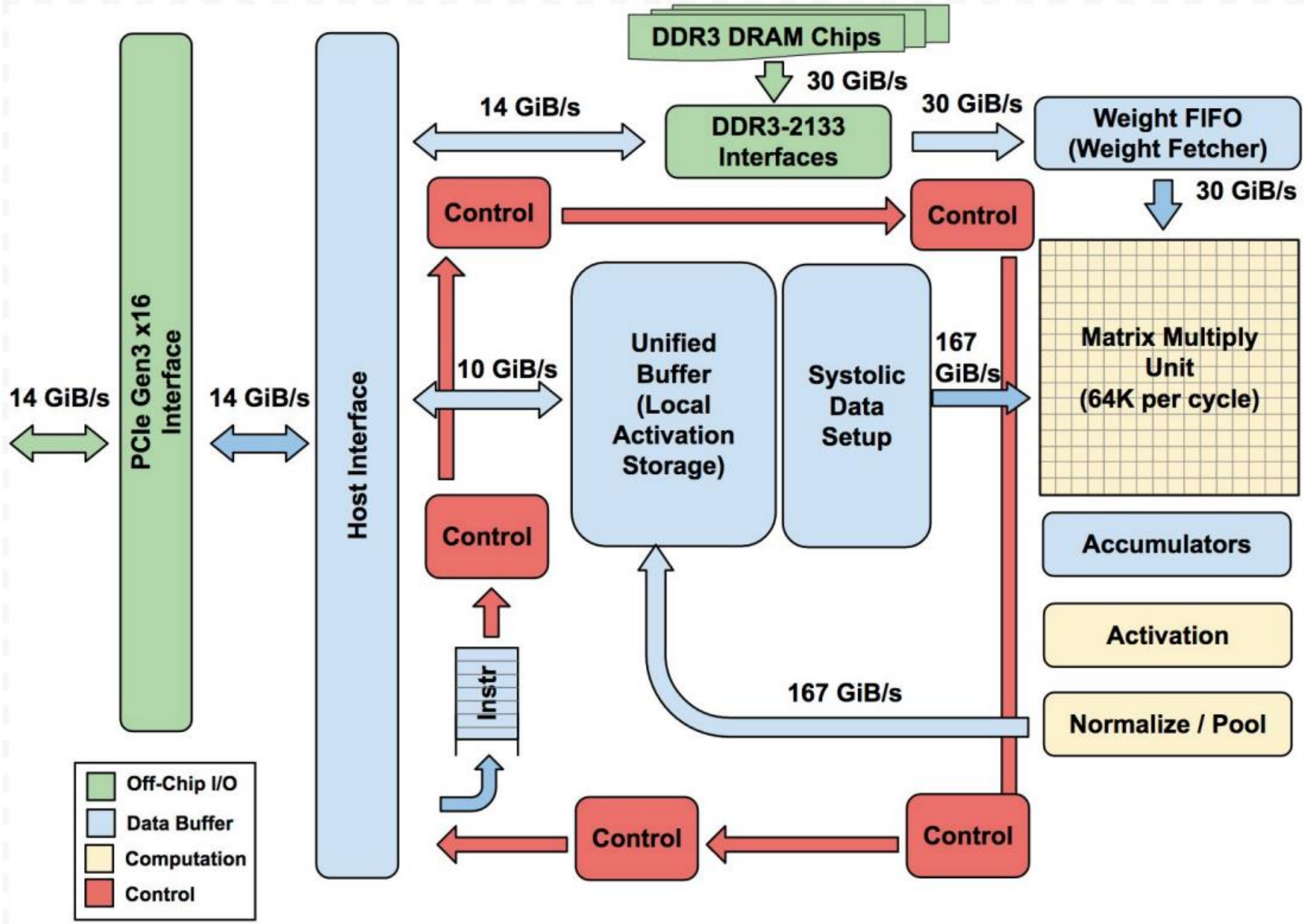
DDR3 DRAM Chips
30 GiB/s
14 GiB/s
DDR3-2133 Interfaces
30 GiB/s
Weight FIFO (Weight Fetcher)
30 GiB/s
Control
Control
14 GiB/s
PCIe Gen3 x16 Interface
14 GiB/s
Host Interface
10 GiB/s
Unified Buffer (Local Activation Storage)
Systolic Data Setup
167 GiB/s
Matrix Multiply Unit (64K per cycle)
Control
Accumulators
Activation
Instr
167 GiB/s
Normalize / Pool
Control
Control
Off-Chip I/O
Data Buffer
Computation
Control

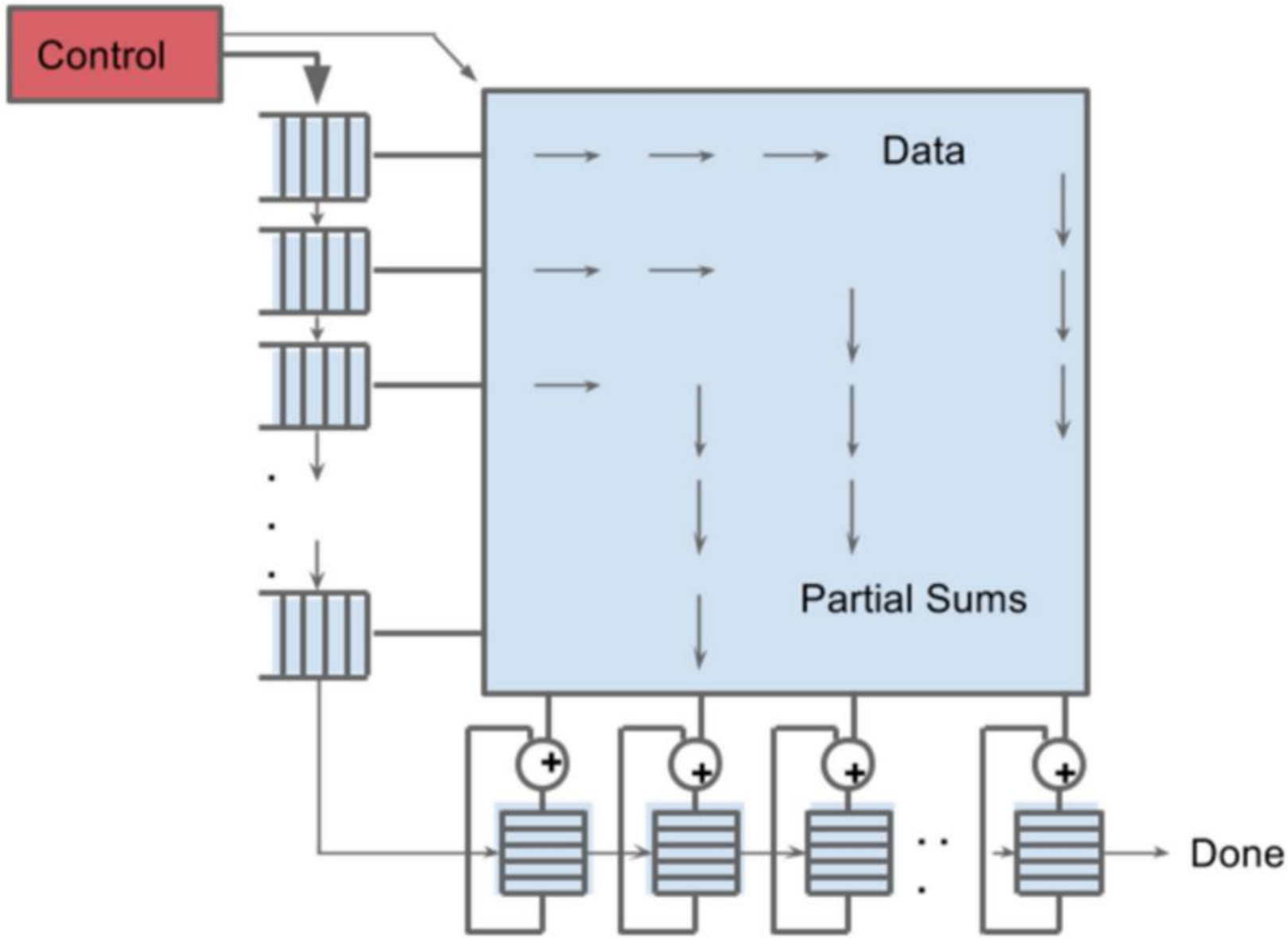
Control
Data
Partial Sums
Done

TPU generations

- TPU v1 (2015) ← Systolic Array architecture
- TPU v2 (2017) ← High Bandwidth Memory
- TPU v3 (2018)
- TPU v4 (2021) ← Optical Circuit Switching
- TPU v5 (2023)
- TPU v6 (2024)
- TPU v7 (2025) ← FP8

TPU v4: An Optically Reconfigurable Supercomputer for Machine Learning with Hardware Support for Embeddings

Industrial Product*

Norman P. Jouppi, George Kurian, Sheng Li, Peter Ma, Rahul Nagarajan, Lifeng Nai, Nishant Patil, Suvinay Subramanian, Andy Swing, Brian Towles, Cliff Young, Xiang Zhou, Zongwei Zhou, and David Patterson
Google, Mountain View, CA

2D Torus

Configurations

Cloud TPU v5e is a combined training and inference (serving) product. Training jobs are optimized for throughput and availability, while serving jobs are optimized for latency. A training job on TPUs provisioned for serving could have lower availability and similarly, a serving job executed on TPUs provisioned for training could have higher latency.

The following 2D slice shapes are supported for v5e:

Topology	Number of TPU chips	Number of hosts
1x1	1	1/8
2x2	4	1/2
2x4	8	1
4x4	16	2
4x8	32	4
8x8	64	8
8x16	128	16
16x16	256	32

2D Torus

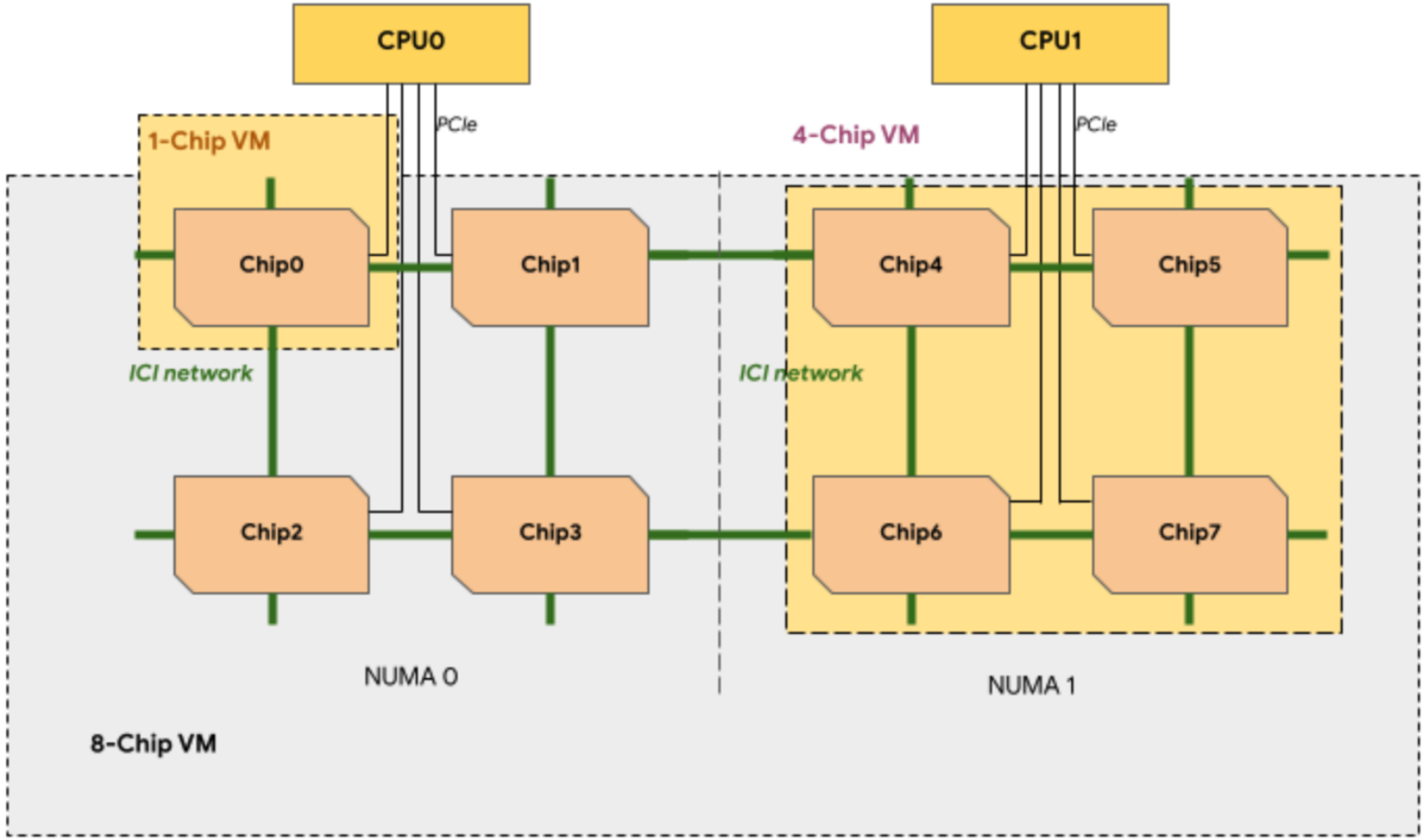
CPU0
CPU1
PCIe
PCIe
1-Chip VM
4-Chip VM
Chip0
Chip1
Chip4
Chip5
ICI network
ICI network
Chip2
Chip3
Chip6
Chip7
NUMA 0
NUMA 1
8-Chip VM

3D Torus

Figure 1 shows the links from the 6 "faces" of a 4^3 block. There are 16 links per face, totaling 96 optical links per block that connect to OCSes. To provide the wraparound links of a 3D torus, the links on the opposing sides must connect to the same OCS. Thus, each 4^3 block connects to $6 \times 16 \div 2 = 48$ OCSes. The Palomar OCS is 136×136 (128 ports plus 8 spares for link testing and repairs), so 48 OCSes connect the 48 pairs of cables from 64 4^3 blocks (each 64 chips), yielding the desired total of 4096 TPU v4 chips.

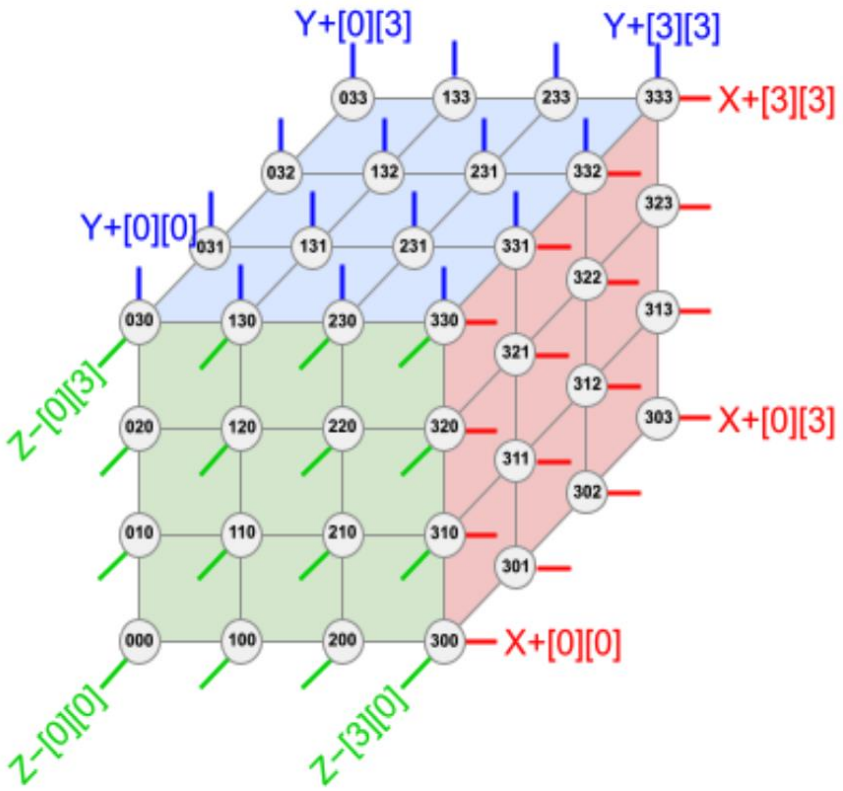

3D Torus

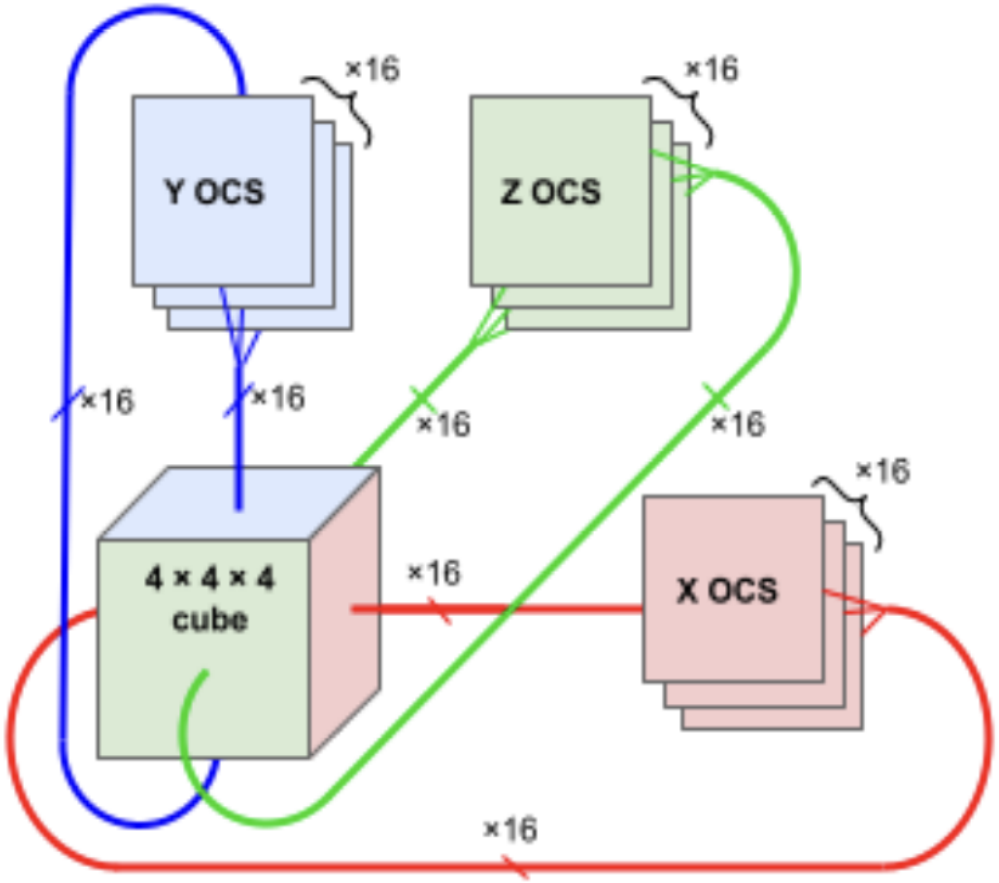

Figure 1: Connectivity of a 4×4×4 cube (top) to 3 OCSes (bottom). The "+" and "–" connections with the same dimension and index are connected to the same OCS; 48 of these in-out pairs each connect to a distinct OCS.

3D Torus

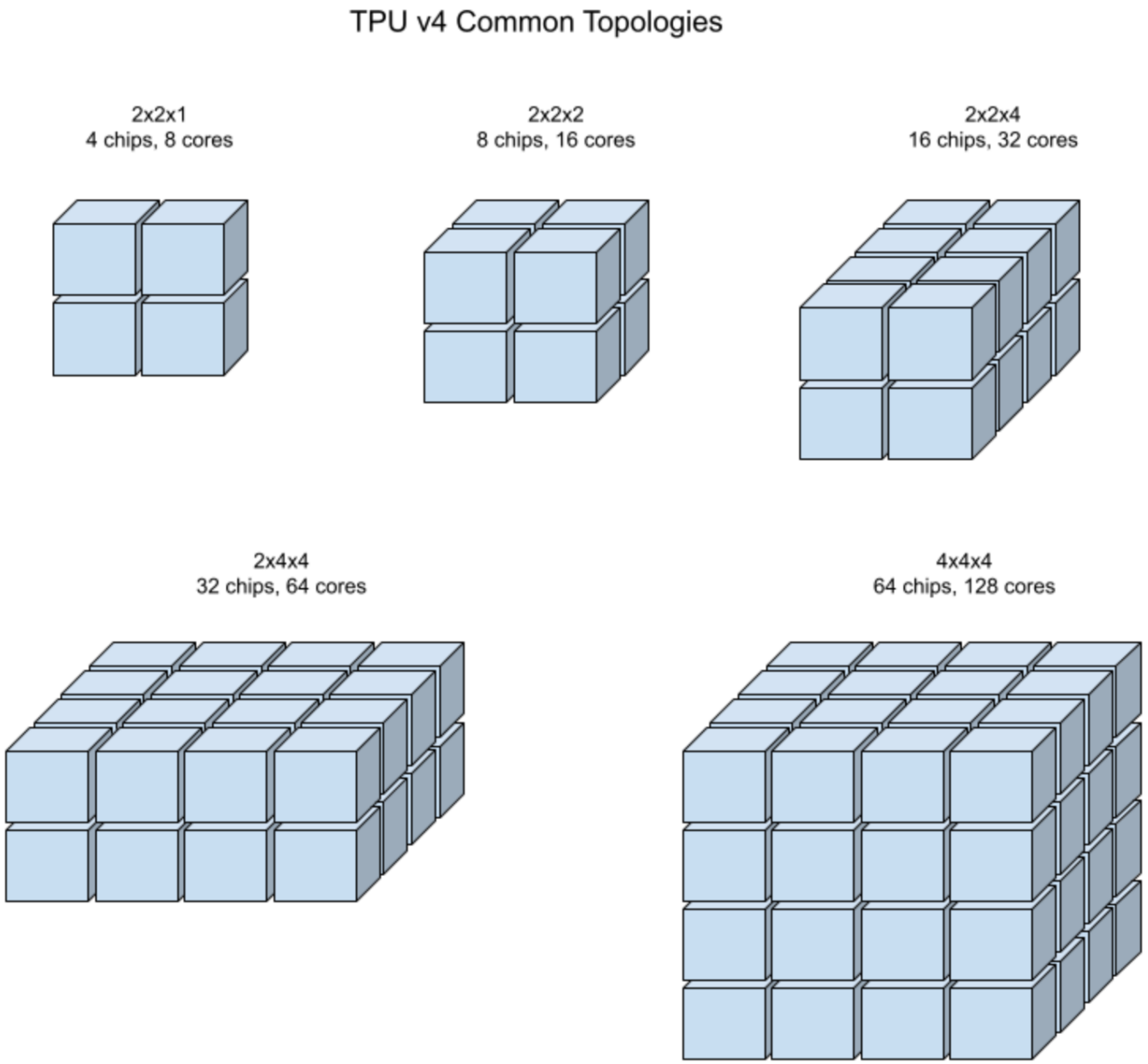
TPU v4 Common Topologies
2x2x1
4 chips, 8 cores
2x2x2
8 chips, 16 cores
2x2x4
16 chips, 32 cores
2x4x4
32 chips, 64 cores
4x4x4
64 chips, 128 cores

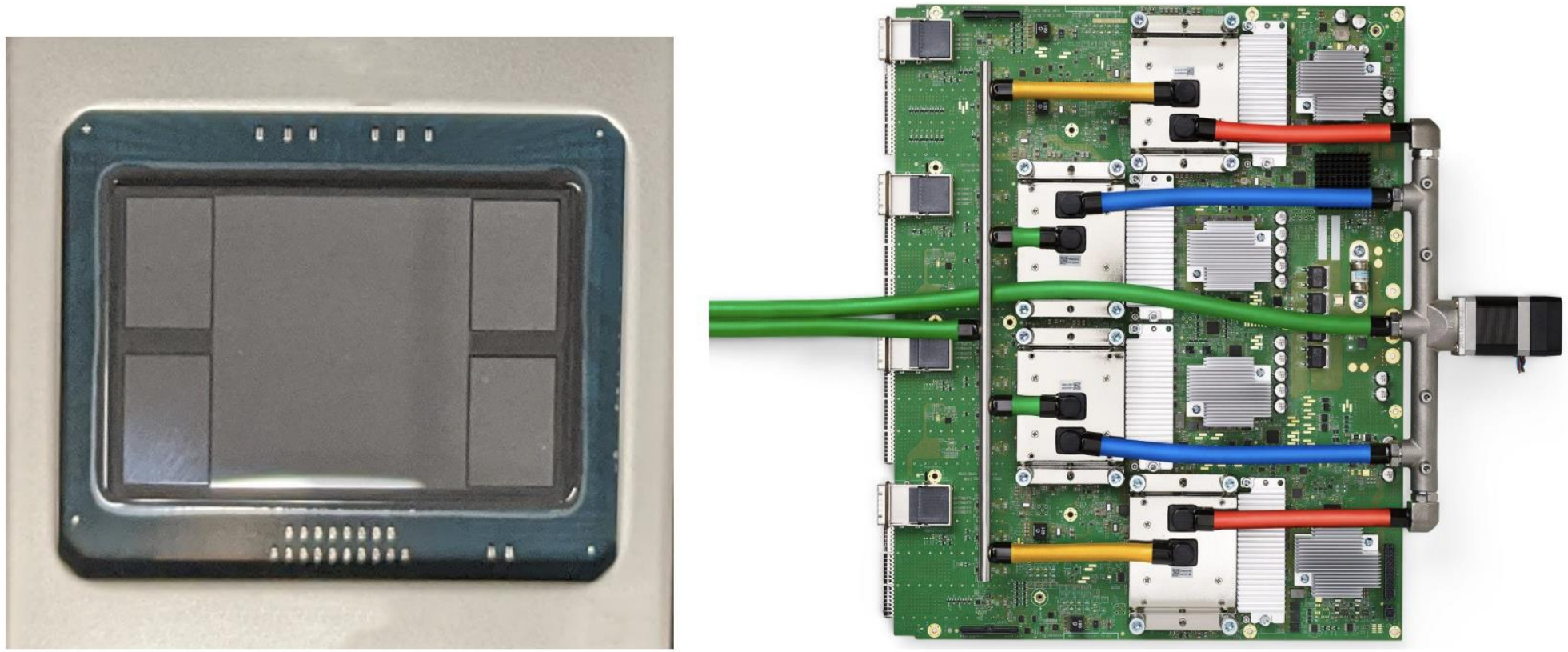

Figure 2: The TPU v4 package (ASIC in center plus 4 HBM stacks) and printed circuit board with 4 liquid-cooled packages. The board's front panel has 4 top-side PCIe connectors and 16 bottom-side OSFP connectors for inter-tray ICI links.

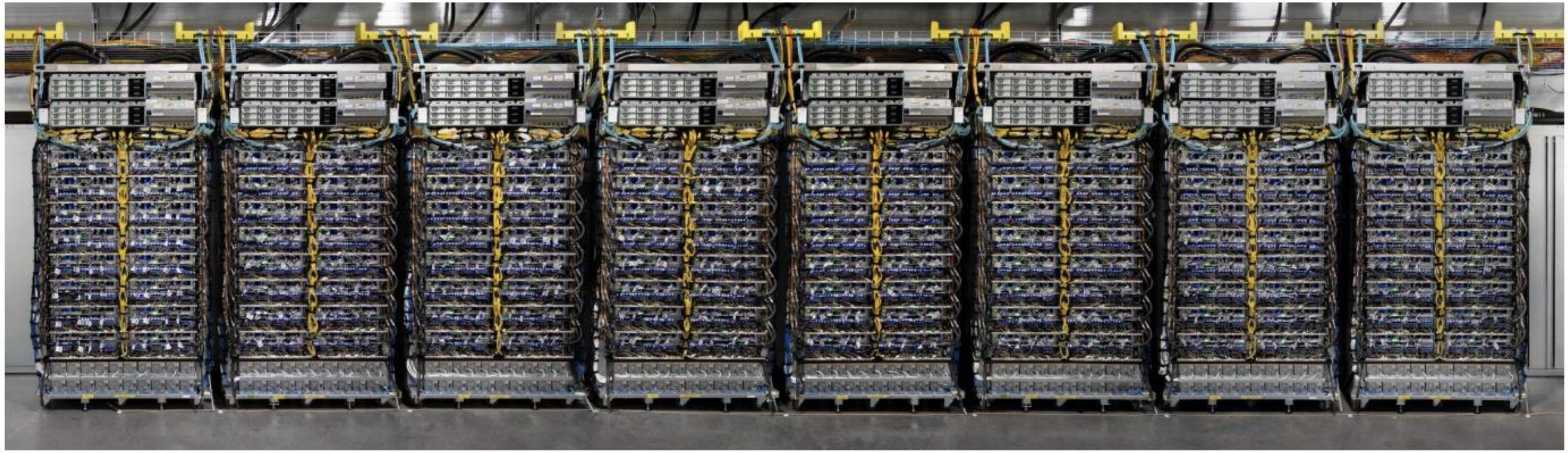

Figure 3: Eight of 64 racks for one 4096-chip supercomputer.

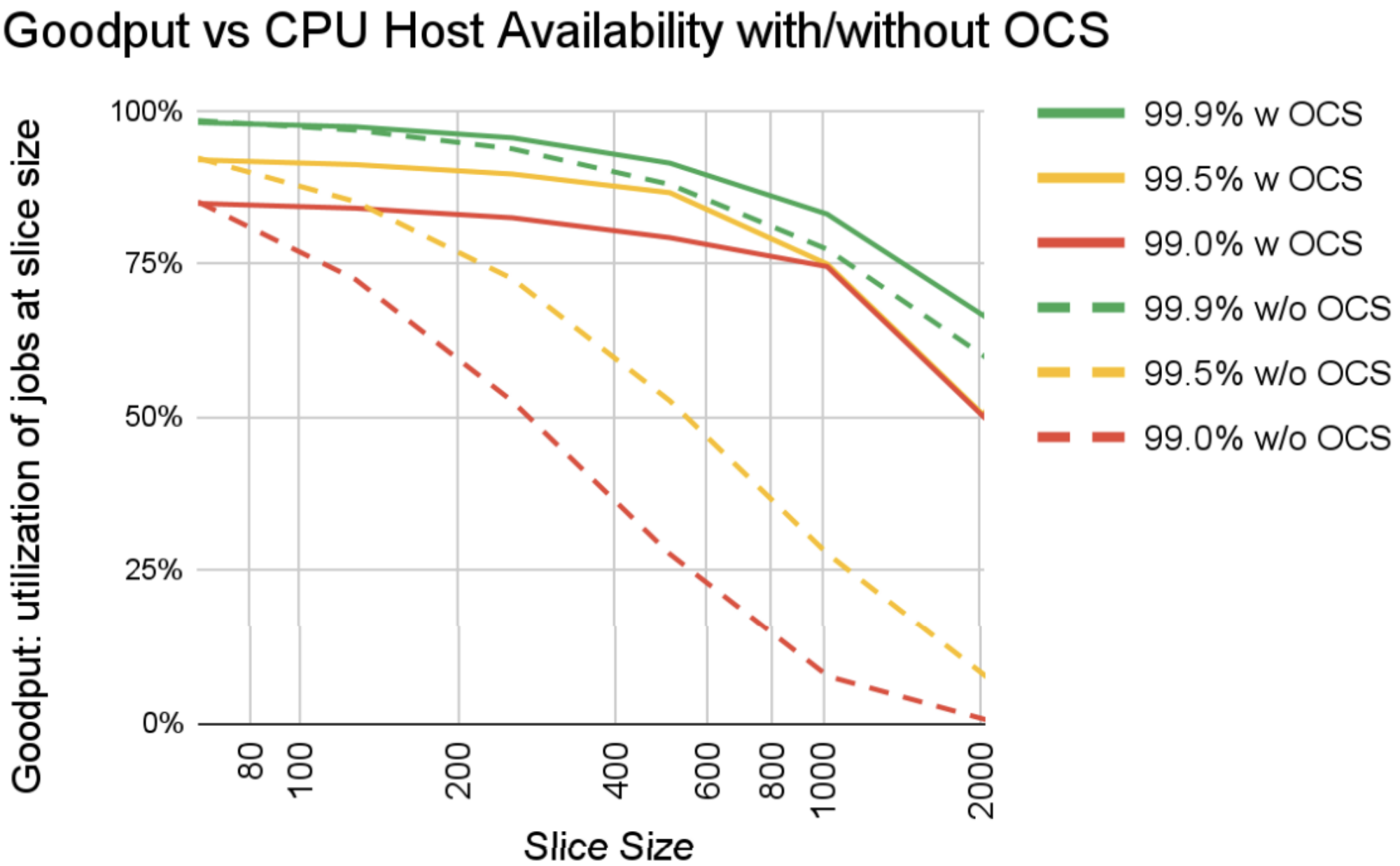
Goodput vs CPU Host Availability with/without OCS
Goodput: utilization of jobs at slice size
100%
75%
50%
25%
0%
80
100
200
400
600
800
1000
2000
Slice Size
99.9% w OCS
99.5% w OCS
99.0% w OCS
99.9% w/o OCS
99.5% w/o OCS
99.0% w/o OCS

Users can change the TPU v4 topology to match the type of parallelism being used, e.g., for a 512 slice, pipeline parallelism might want a cigar shape (4×4×32) instead of the conventional 8^3 cube (8×8×8). For the highest bisection bandwidth, often needed by embedding heavy applications, the conventional 8^3 cube is preferred. ML practitioners often combine parallelism types to get the best performance, such as data plus model parallelism. Model parallelism typically has two parameters: width and length. To take full advantage of the bandwidth available, users map data parallelism along one dimension of the 3D torus and the two model parallel parameters on the other dimensions. Table 3 in Section 4 gives examples of performance gains of 1.2x to 2.3x by varying the topology and the hyperparameters.

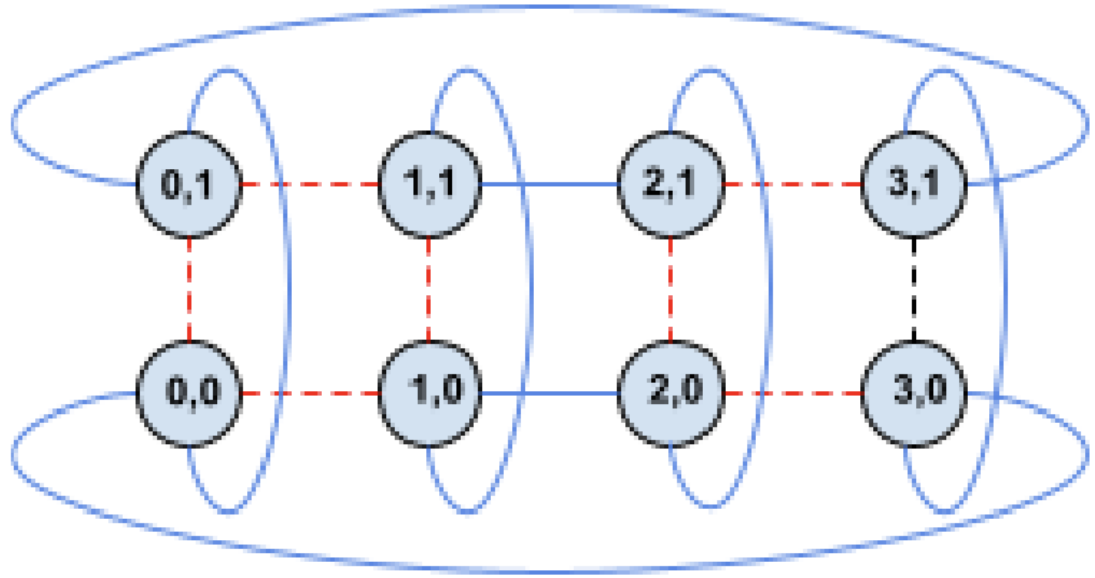
0,1
1,1
2,1
3,1
0,0
1,0
2,0
3,0

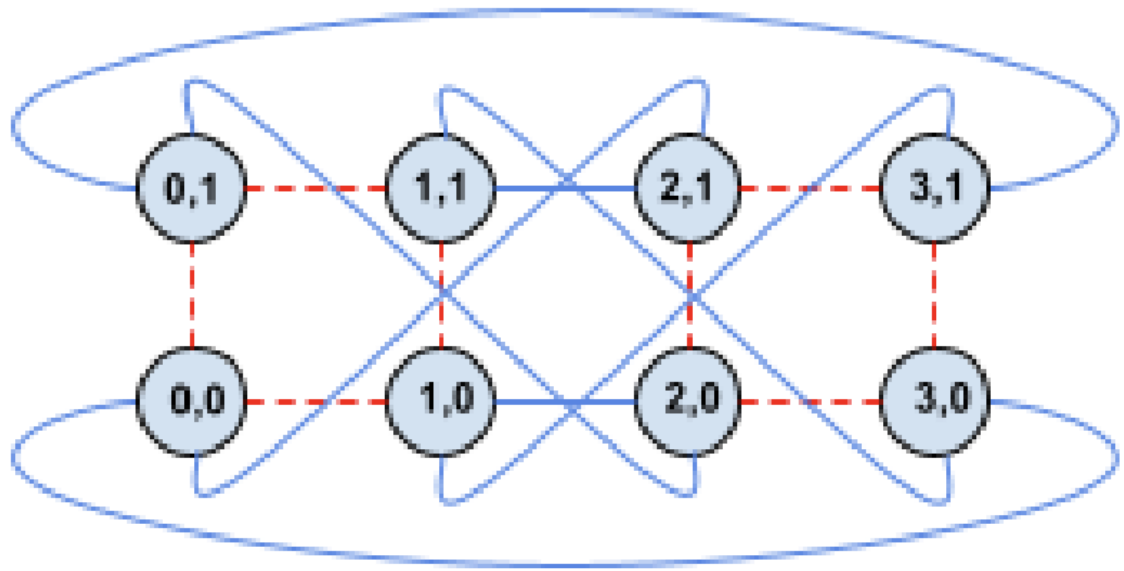
0,1
1,1
2,1
3,1
0,0
1,0
2,0
3,0

RDMA over Ethernet for Distributed AI Training at Meta Scale

Adithya Gangidi, Rui Miao, Shengbao Zheng, Sai Jayesh Bondu, Guilherme Goes, Hany Morsy, Rohit Puri, Mohammad Riftadi, Ashmitha Jeevaraj Shetty, Jingyi Yang, Shuqiang Zhang, Mikel Jimenez Fernandez, Shashidhar Gandham, Hongyi Zeng
Meta

Collectives	Model Dist. purpose	Traffic pattern	Network congestion	GPU Msg (MB)	NIC Msg (KB)	Flow entropy per NIC	Topology need
`AlltoAll(v)`	Embedding distribution	full mesh with imbalanced traffic	N-to-N with possible incast	1	128	$\log(M * N)$	Full bisection bandwidth
`AllReduce`	DDP	Tree or Ring	2-to-1 incast for Tree	4 (Tree) 1 (Ring)	512	$\log(M)$	Tolerate over-subscription
`AllGather`	FSDP	Ring	1-to-1 low congestion	1	512	$\log(M)$	Tolerate over-subscription
`ReduceScatter`	FSDP	Ring	1-to-1 low congestion	1	512	$\log(M)$	Tolerate over-subscription

Table 1: Transport implications from model and collectives for large collective sizes. M is number of channels used in NCCL. N is number of RDMA NICs. Full-mesh implementation assumed for `AlltoAll`

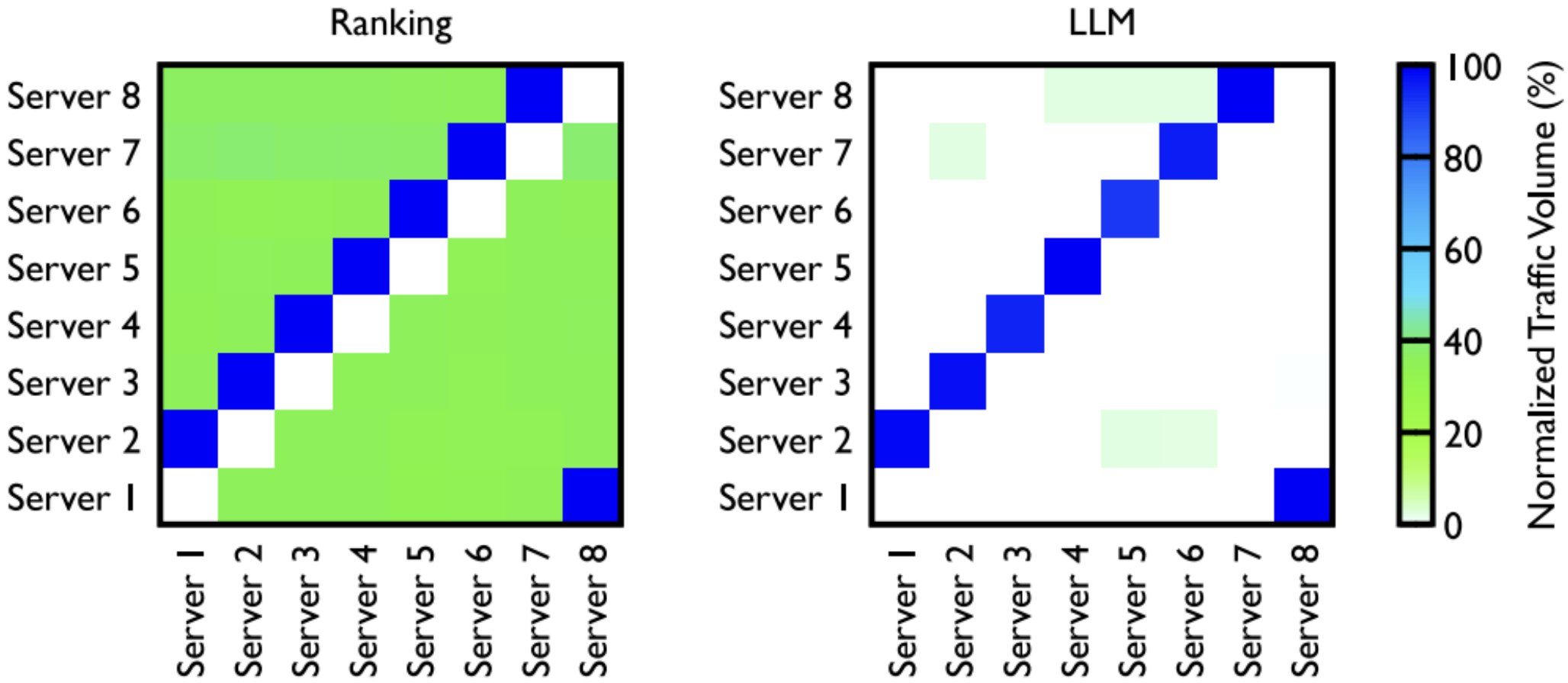

Figure 3: Traffic pattern comparison from experiments

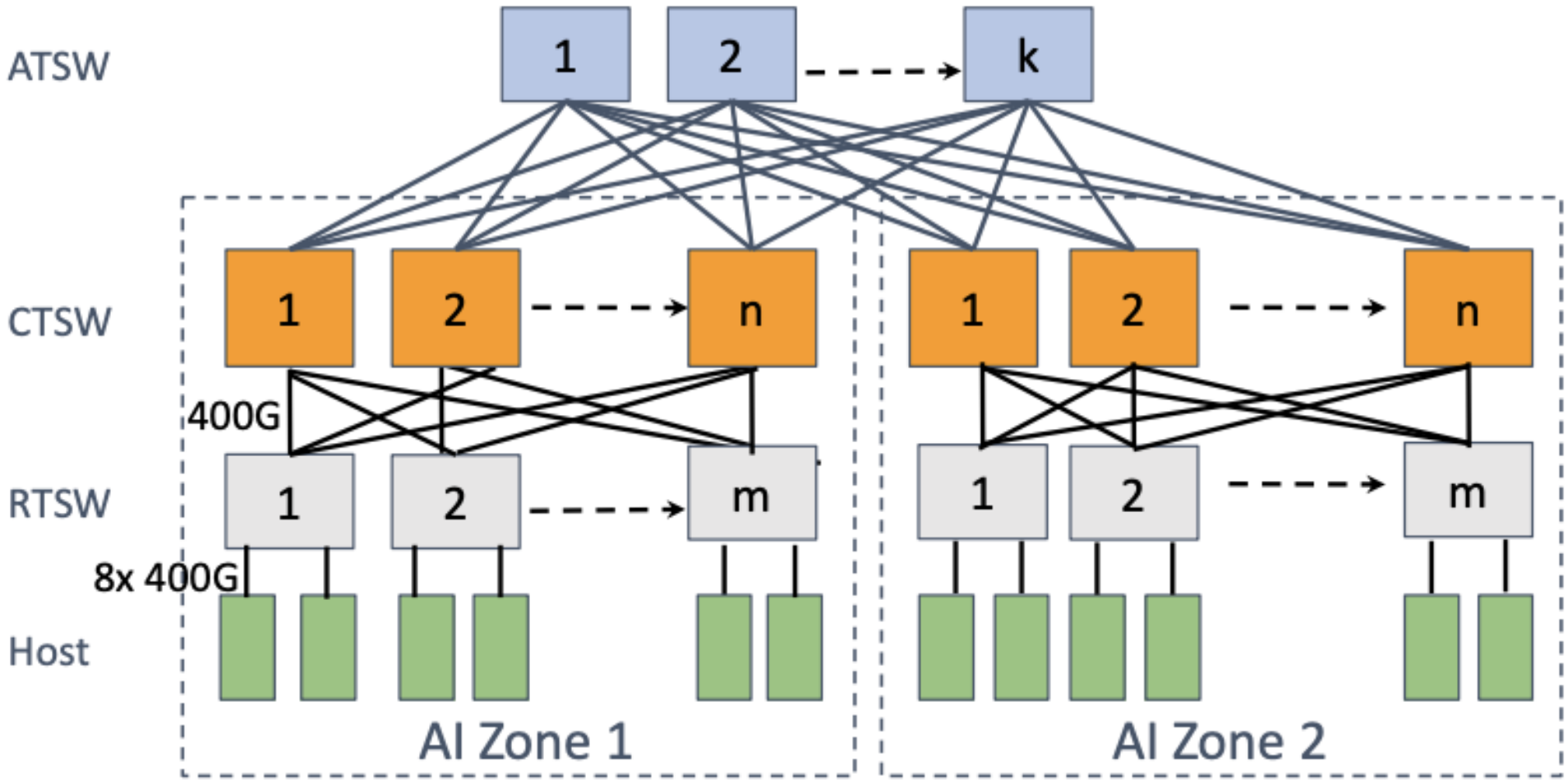

Figure 6: Backend Network Topology

Problems in networks for AI

- ECMP Routing
  - QP scaling
  - Customized hashing
- Centralized traffic engineering

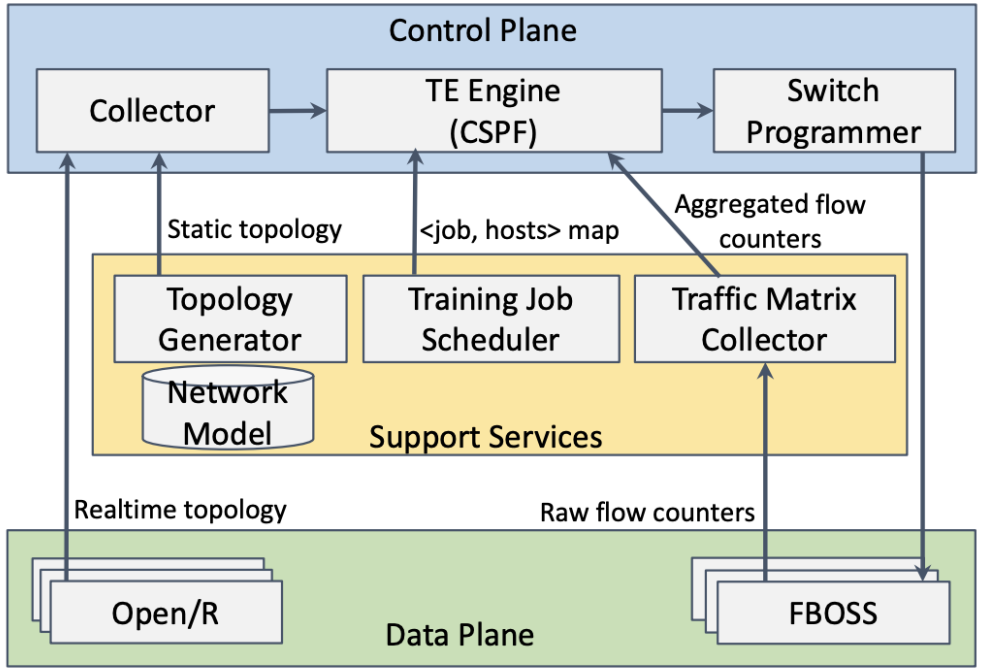

Figure 9: Centralized Traffic Engineering architecture