SPH6611LR5H-1

High SNR Support Bottom Port SiSonic™ Microphone

Preliminary Information
Confidential & Proprietary

The SPH6611LR5H-1 is a miniature, high-performance, low power, bottom port silicon microphone. Using Knowles' proven high performance SiSonic™ MEMS technology, the SPH6611LR5H-1 consists of an acoustic sensor, a low noise input buffer, and an output amplifier. These devices are suitable for applications such as cellphones, smart phones, laptop computers, sensors, digital still cameras, portable music recorders, and other portable electronic devices where excellent wideband audio performance and RF immunity are required

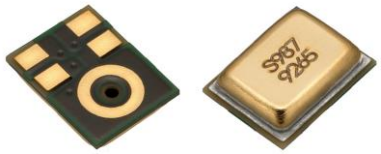

Product Features

- Low Distortion /High AOP
- High SNR
- Low Current Consumption in Low-Power Mode
- Flat Frequency Response
- High Drive Capability
- RF Shielded
- Bottom Port
- Sensitivity Matching
- Supports Dual Multiplexed Channels
- Ultra-Stable Performance
- Omnidirectional
- Small Size
- Standard SMD Reflow
- LGA Package

Typical Applications

- Portable electronics
- Cellphones
- Laptop Computers
- Tablets
- Digital Still Cameras
- Portable Music Recorders

Absolute Maximum Ratings

Table 1: Absolute Maximum Ratings

Parameter	Absolute Maximum Rating	Units
Vdd, DATA to Ground	-0.3, +5.0	V
CLOCK, SELECT to Ground	-0.3, +5.0	V
Input Current	±5	mA
Short Circuit to/from DATA	Indefinite to Ground or Vdd	sec
Temperature	-40 to +100	ºC

Stresses exceeding these "Absolute Maximum Ratings" may cause permanent damage to the device. These are stress ratings only. Functional operation at these or any other conditions beyond those indicated under "Acoustic & Electrical Specifications" is not implied. Exposure beyond those indicated under "Acoustic & Electrical Specifications" for extended periods may affect device reliability

@2017; Knowles Electronics, LLC, Itasca, IL, USA, All Rights Reserved. SiSonic, Knowles and the trademarks of Knowles Electronics, LLC

Acoustic & Electrical Specifications

Table 2: General Microphone Specifications
Test Conditions: 23 ±2°C, 55±20% R.H., V_{DD} =1.8V, no load, unless otherwise indicate

Parameter	Symbol	Conditions	Min	Typ	Max	Units
Supply Voltage[2]	Vdd		1.5	-	3.6	V
Supply Current[1,2]	Idd			145	185	µA
Sensitivity[1]	S	94 dB SPL @ 1 kHz	-39	-38	-37	dBV/Pa
Signal to Noise Ratio	SNR	94 dB SPL @ 1 kHz, A-weighted	-	65	-	dB(A)
Total Harmonic Distortion	THD	94 dB SPL @ 1 kHz, S = Typ, Rload > 2kΩ	-	0.2	0.5	%
Acoustic Overload Point	AOP	10% THD @ 1 kHz, S = Typ, Vdd = 1.8V, Rload > 2kΩ	-	124	-	dB SPL
Power Supply Rejection Ratio	PSRR	100 mVpp, 1 kHz sinewave	-	60	-	dB
Power Supply Rejection	PSR	100 mVpp square wave @ 217 Hz, Vdd = 1.8V, A-weighted	-	-92	-	dBV(A)
Low Frequency Roll off	LFRO	-3dB Normalized to 1k Hz	-	90	-	Hz
DC Output			-	1.1	-	V
Output Impedance	Zout	@ 1 kHz	-	-	400	Ω
Directivity			Omnidirectional			
Polarity		Increasing sound pressure	Increasing output voltage			

[1] 100% tested.
[2] Maximum specifications are measured at maximum V_{DD}. Typical specifications are measured at V_{DD} = 1.8V.

Application Notes

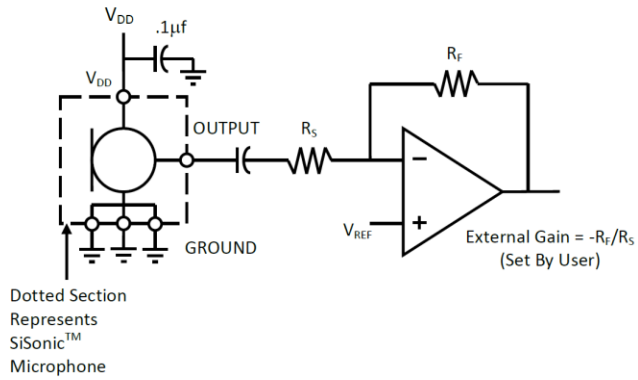

Figure 1: Typical Application Circuit

Notes: All Ground pins must be connected to ground

Capacitors near the microphone should not contain Class 2 dielectrics due to their piezoelectric effects.

Detailed information on acoustic, mechanical, and system integration can be found in the latest *SiSonic™ Design Guide* application note.

.

Preliminary Information
Confidential & Proprietary

@2017; Knowles Electronics, LLC, Itasca, IL, USA, All Rights Reserved. SiSonic, Knowles and the trademarks of Knowles Electronics, LLC

Performance Curves

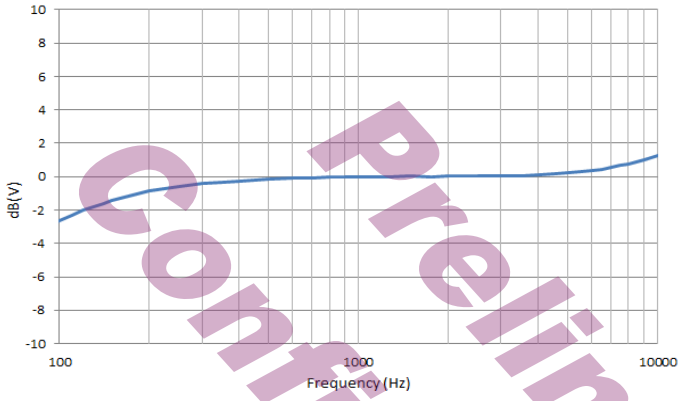

Figure 2: Typical Free Field Response Normalized to 1 kHz

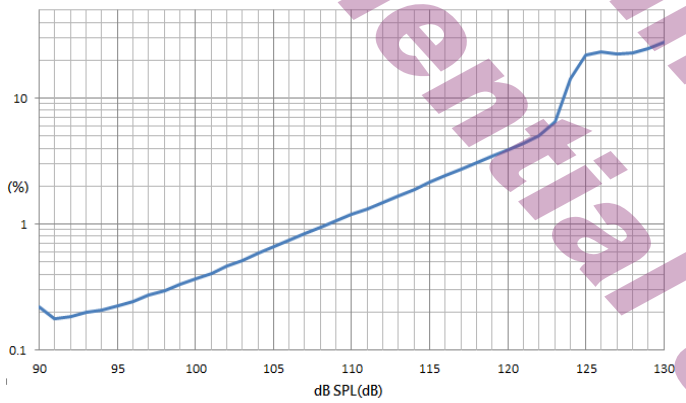

Figure 3: Typical THD vs SPL

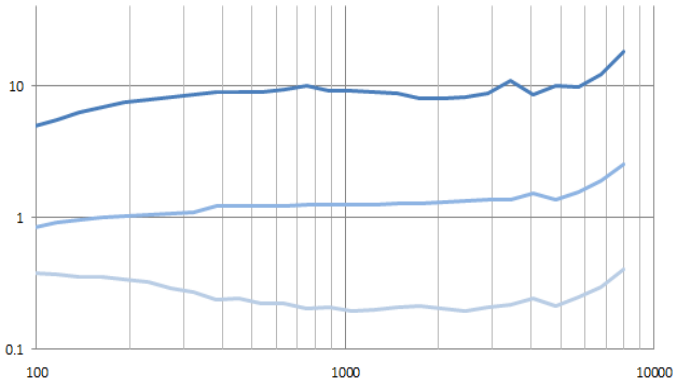

Figure 4: Typical THD vs Frequency

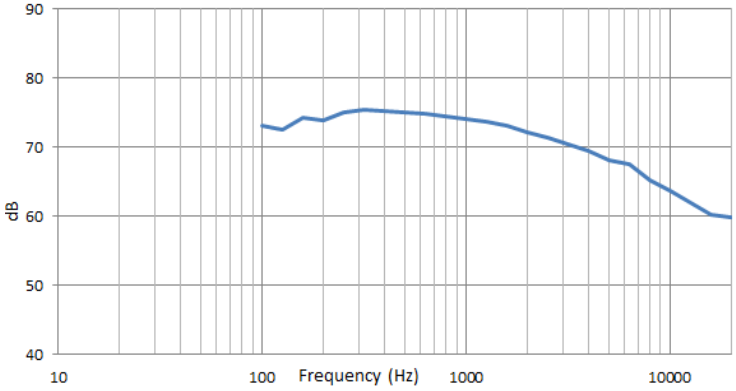

Figure 5: Typical PSRR

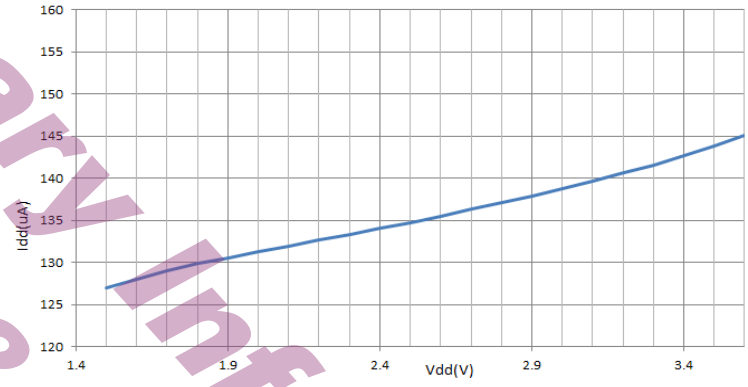

Figure 6: Typical Idd vs Vdd

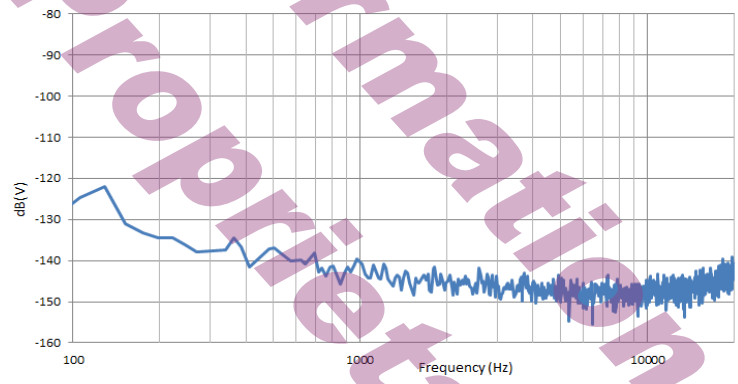

Figure 7: Noise Floor Power Spectral Density

Preliminary Information
Confidential & Proprietary

@2017; Knowles Electronics, LLC, Itasca, IL, USA, All Rights Reserved. SiSonic,
Knowles and the trademarks of Knowles Electronics, LLC

Mechanical Specifications

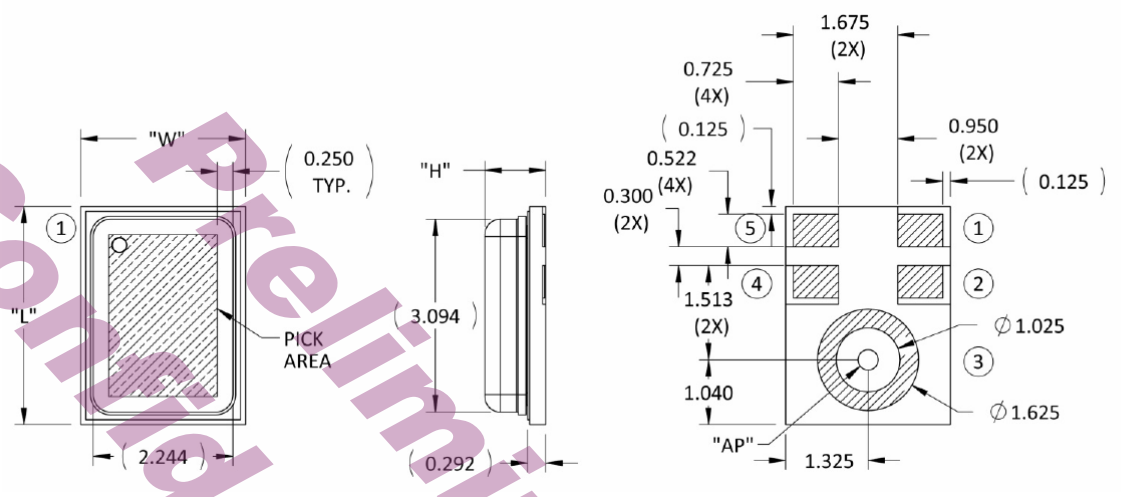

Item	Dimension	Tolerance
Length (L)	3.50	±0.10
Width (W)	2.65	±0.10
Height (H)	0.98	±0.10
Acoustic Port (AP)	Ø0.325	±0.05

Pin #	Pin Name	Type	Description
1	OUTPUT	Signal	Output Signal
2	GROUND	Power	Ground
3	GROUND	Power	Ground
4	Test Pin	N/A	Test Pin(Knowles Internal use)-Connect to Ground
5	V_{DD}	Power	Power Supply

EXAMPLE LAND PATTERN

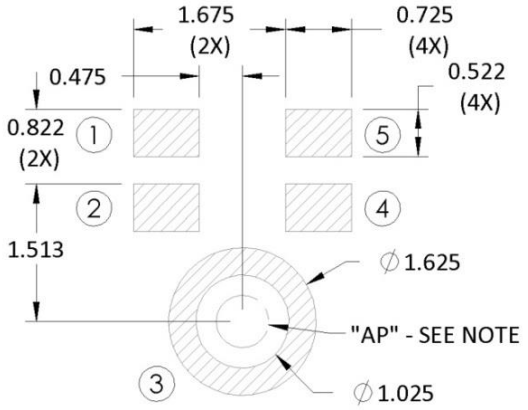

EXAMPLE SOLDER STENCIL PATTERN

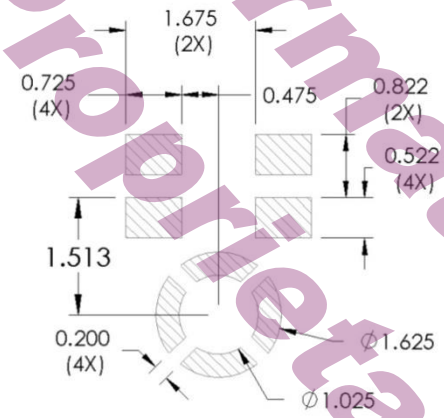

Notes: Pick Area only extends to 0.25 mm of any edge or hole unless otherwise specified.
Dimensions are in millimeters unless otherwise specified.
Tolerance is ±0.15mm unless otherwise specified
In the acoustic path, the recommended PCB hole Diameter is Ø 0.65< PCB Hole< Ø 1, recommended Gasket Cavity Diameter is D≧ 1.0mm; and recommended Case Hole Diameter is 1.0mm < D <1.5mm. More information on AP size considerations can be found in the latest SiSonic™ Design Guide application note.
Further optimizations based on application should be performed.

Preliminary Information
Confidential & Proprietary

@2017; Knowles Electronics, LLC, Itasca, IL, USA, All Rights Reserved. SiSonic, Knowles and the trademarks of Knowles Electronics, LLC

Packaging & Marking Detail

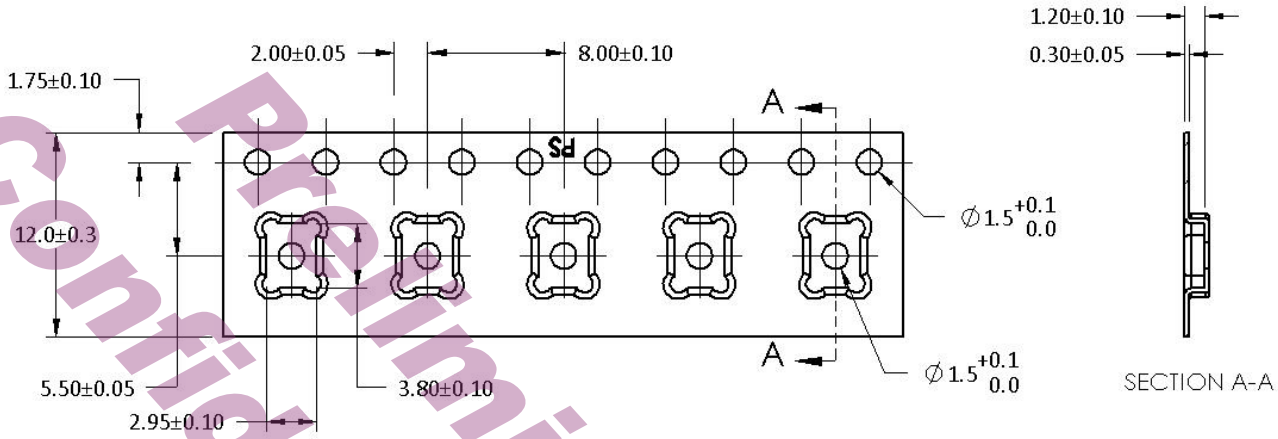

Model Number	Suffix	Reel Diameter	Quantity Per Reel
SPH6611LR5H-1	-8	13”	5,900

Alpha Character A:

“S”: Knowles SiSonic™ Production
“E”: Knowles Engineering Samples
“P”: Knowles Prototype Samples

“12345678”:

Unique Job Identification Number for Product traceability

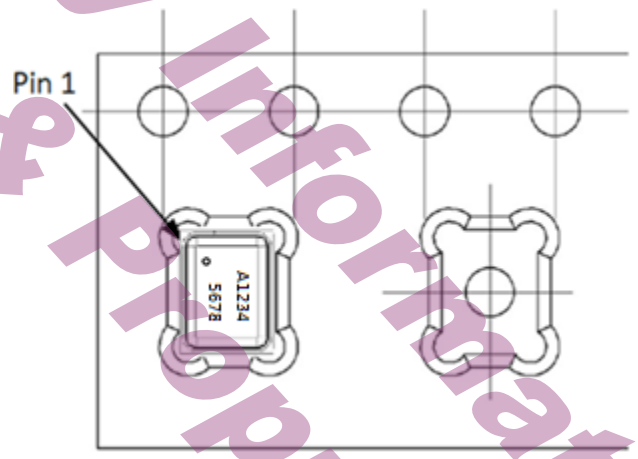

Notes: Dimensions are in millimeters unless otherwise specified.
Vacuum pickup only in the pick area indicated in Mechanical Specifications.
Tape & reel per EIA-481 "REVC”.
Labels applied directly to reel and external package.
Shelf life: Twelve (12) months when devices are to be stored in factory supplied, unopened ESD moisture sensitive bag under maximum environmental conditions of 30°C, 70% R.H.

Preliminary Information
Confidential & Proprietary

@2017; Knowles Electronics, LLC, Itasca, IL, USA, All Rights Reserved. SiSonic, Knowles and the trademarks of Knowles Electronics, LLC

Recommended Reflow Profile

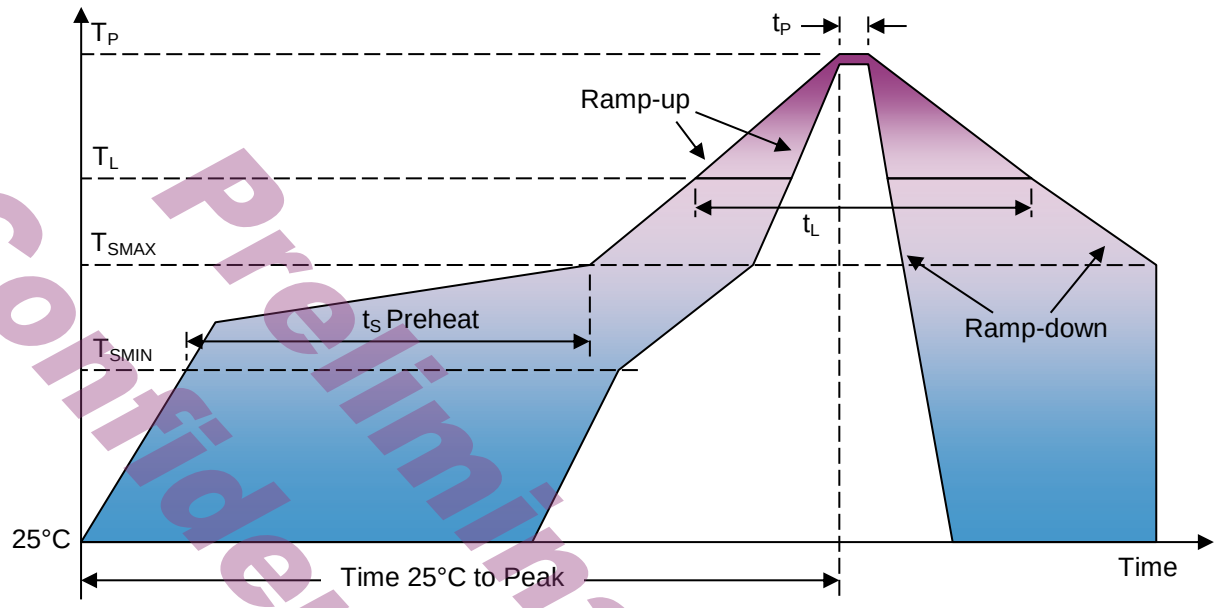

Profile Feature	Pb-Free
Average Ramp-up rate (T_{SMAX} to T_P)	3°C/second max.
Preheat • Temperature Min (T_{SMIN}) • Temperature Max (T_{SMAX}) • Time (T_{SMIN} to T_{SMAX}) (t_S)	 150°C 200°C 60-180 seconds
Time maintained above: • Temperature (T_L) • Time (t_L)	 217°C 60-150 seconds
Peak Temperature (T_P)	260°C
Time within 5°C of actual Peak Temperature (t_P)	20-40 seconds
Ramp-down rate (T_P to T_{SMAX})	6°C/second max
Time 25°C to Peak Temperature	8 minutes max

Notes: Based on IPC/JDEC J-STD-020 Revision C.
All temperatures refer to topside of the package, measured on the package body surface

Additional Notes

(A) MSL (moisture sensitivity level) Class 1.
(B) Maximum of 3 reflow cycles is recommended.
(C) In order to minimize device damage:

- Do not board wash or clean after the reflow process.
- Do not brush board with or without solvents after the reflow process.
- Do not directly expose to ultrasonic processing, welding, or cleaning.
- Do not insert any object in port hole of device at any time.
- Do not apply over 30 psi of air pressure into the port hole.
- Do not pull a vacuum over port hole of the microphone.
- Do not apply a vacuum when repacking into sealed bags at a rate faster than 0.5 atm/sec.

.

Preliminary Information
Confidential & Proprietary

@2017; Knowles Electronics, LLC, Itasca, IL, USA, All Rights Reserved. SiSonic, Knowles and the trademarks of Knowles Electronics, LLC

Materials Statement

Meets the requirements of the European RoHS directive 2011/65/EC as amended.

Meets the requirements of the industry standard IEC 61249-2-21:2003 for halogenated substances and Knowles Green Materials Standards Policy section on Halogen-Free.

Product is Beryllium Free according to limit specified on the Knowles Hazardous Material List(HSL for products)

Ozone depleting substances are not used in the product or the processes used to make the product, including compounds listed in Annex A, B, and C of the "Montreal Protocol on Substances That Deplete the Ozone Layer."

Reliability Specifications

Test	Description
Thermal Shock	100 cycles of air-air thermal shock from -40°C to +125°C with 15 minute soaks (IEC 68-2-4)
High Temperature Storage	+105°C environment for 1,000 hours (IEC 68-2-2 Test Ba)
Low Temperature Storage	-40°C environment for 1,000 hours (IEC 68-2-2 Test Aa)
High Temperature Bias	+105°C environment while under bias for 1,000 hours (IEC 68-2-2 Test Ba)
Low Temperature Bias	-40°C environment while under bias for 1,000 hours (IEC 68-2-2 Test Aa)
Temperature/Humidity Bias	+85°C/85% R.H. environment while under bias for 1,000 hours (JESD22-A101A-B)
Vibration	12 minutes in each axis from 20 to 2,000 Hz in X,Y, and Z directions with peak acceleration of 20g (MIL 883E, Method 2007.2,A)
ESD-HBM	3 discharges of ±2 kV direct contact to I/O pins. (ESD STM5.2)
ESD-LID/GND	3 discharges of ±8 kV direct contact to lid while unit is grounded. (IEC 61000-4-2)
ESD-MM	3 discharges of ±200V direct contact to I/O pins. (MIL 883E, Method 3015.7)
Reflow	5 reflow cycles with peak temperature of +260°C
Tumble test	200 tumbles in 100g block from a height of 1m onto a steel base
Mechanical Shock	3 pulses of 10,000g in each of the ±X, ±Y, ±Z directions while under bias (IEC 68-2-27 Test Ea)

Notes: After reliability tests are performed, the sensitivity of the microphones shall not deviate more than 3dB from their initial value. After 3 reflow cycles, the sensitivity of the microphones shall not deviate more than 1 dB from its initial value.

.

Preliminary Information
Confidential & Proprietary

@2017; Knowles Electronics, LLC, Itasca, IL, USA, All Rights Reserved. SiSonic, Knowles and the trademarks of Knowles Electronics, LLC

Specification Revisions

Revision	Specification Changes	Date
1	Initial Draft	5/1/17

Preliminary Information
Confidential & Proprietary

@2017; Knowles Electronics, LLC, Itasca, IL, USA, All Rights Reserved. SiSonic,
Knowles and the trademarks of Knowles Electronics, LLC