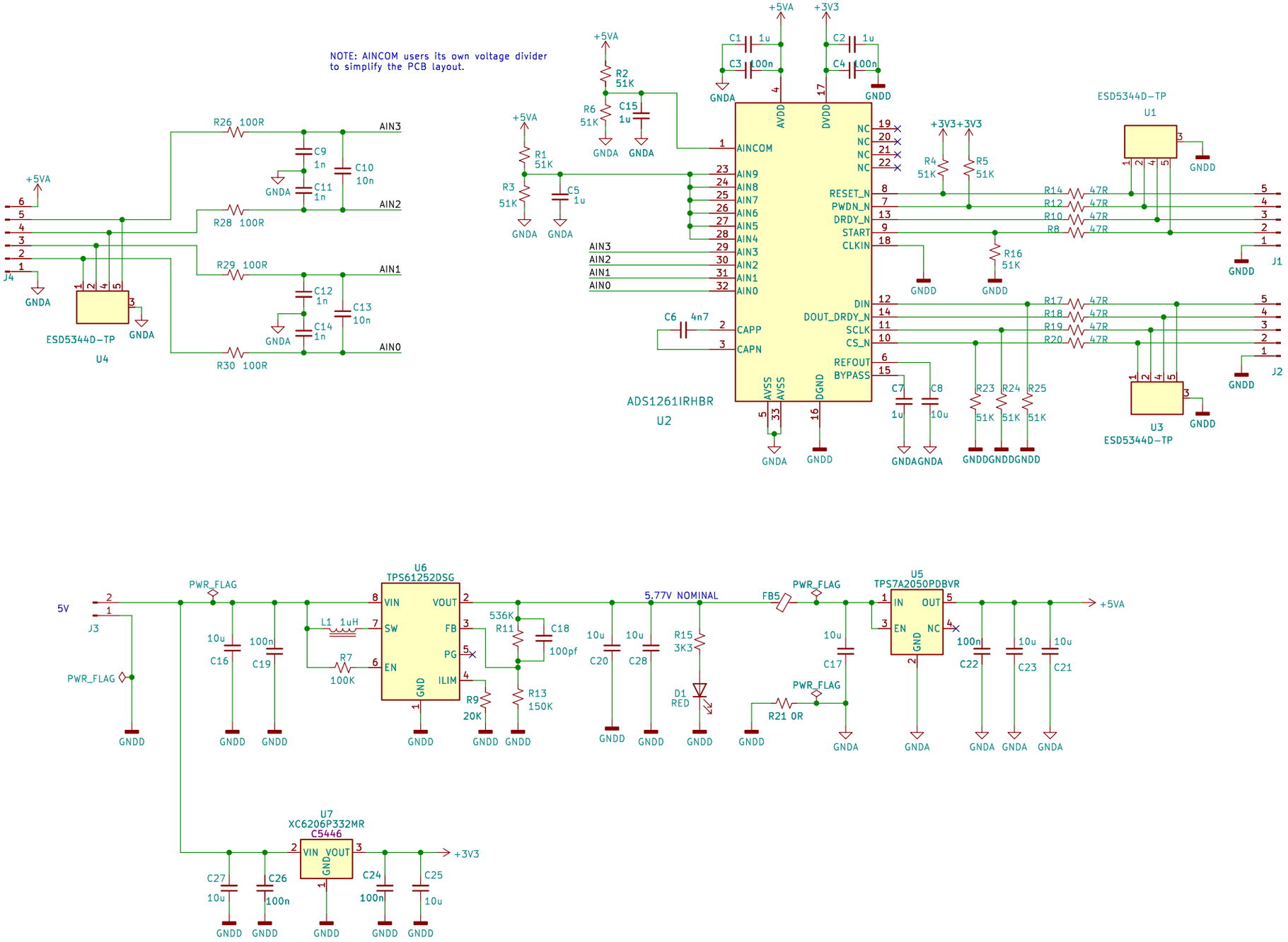
NOTE: AINCOM users its own voltage divider
to simplify the PCB layout.
ADS1261IRHBR
U2
ESD5344D-TP
U1
U3
U4
J1
J2
J3
J4
U6
TPS61252DSG
U5
TPS7A2050PDBVR
U7
XC6206P332MR
C5446
5V
5.77V NOMINAL
PWR_FLAG
+5VA
+3V3
GNDA
GNDD
AIN3
AIN2
AIN1
AIN0