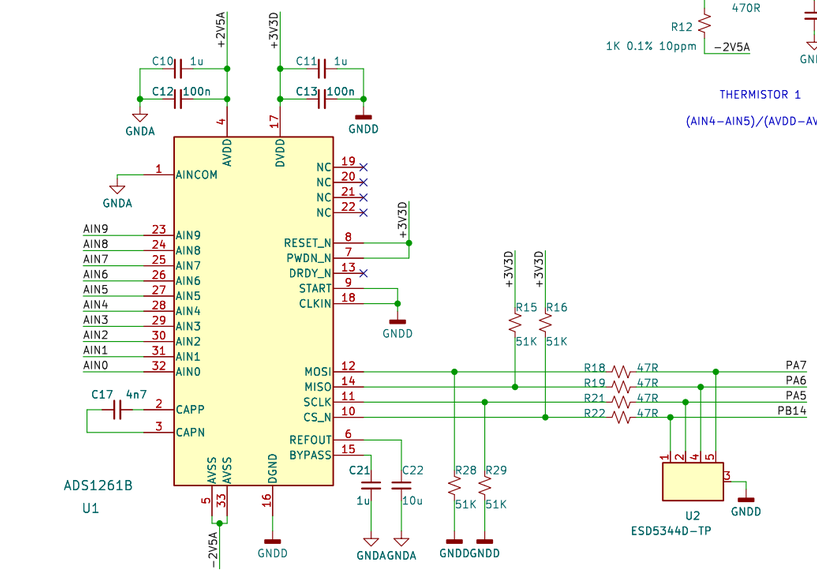

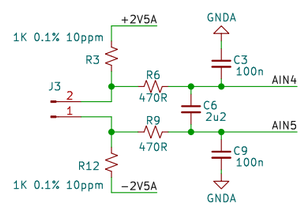

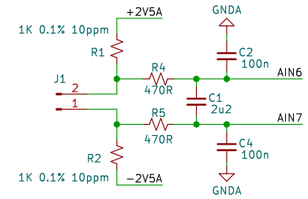

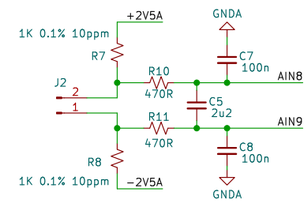

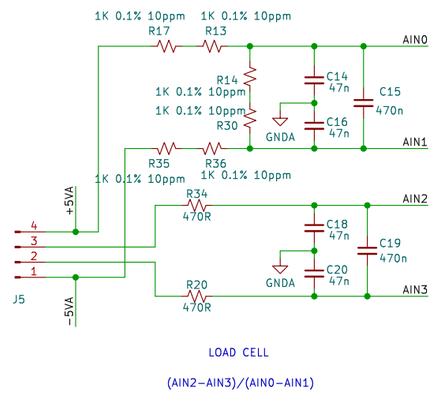

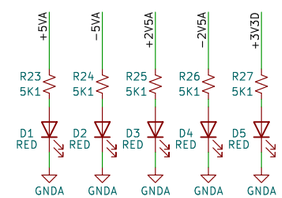

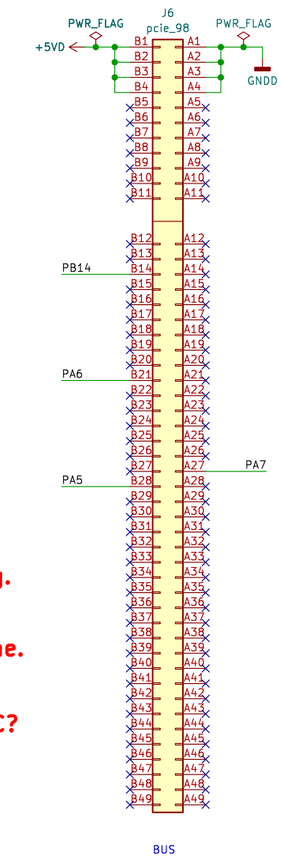

Have long pads for SMD footprints, for hand soldering.

Adjust the symbols of the positive and negative regulators to look the same.

Do the negative regulators also have pin 4 NC?

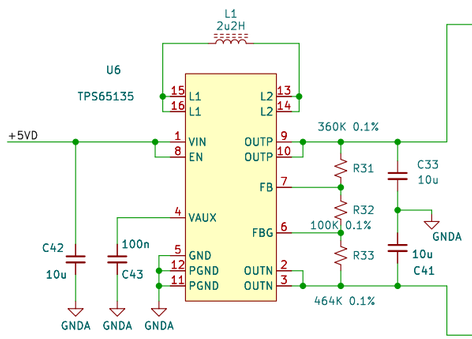

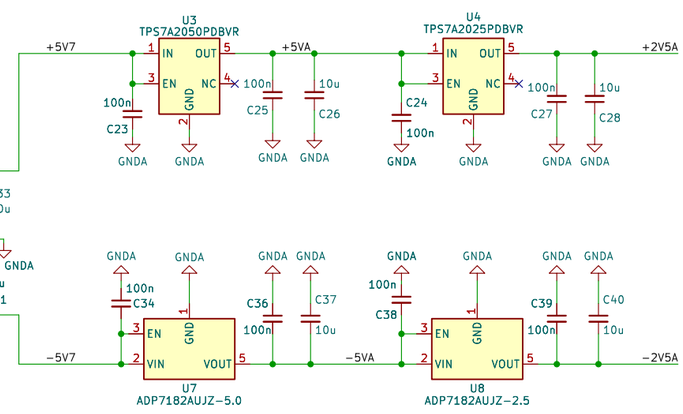

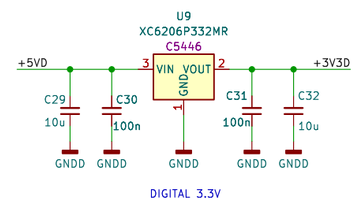

Consider to make the load cell connector 6 pins Kelvin style (with s
jumps for bypassing the Kelvin arrangment)

Add to the load cell connector pin for ground/shield

Sheet: /
File: adc.kicad_sch

Title: ADS1261 ADC BOARD

Size: USLedger	Date:	Rev: 0.1
KiCad E.D.A. kicad 7.0.1-0		Id: 1/1