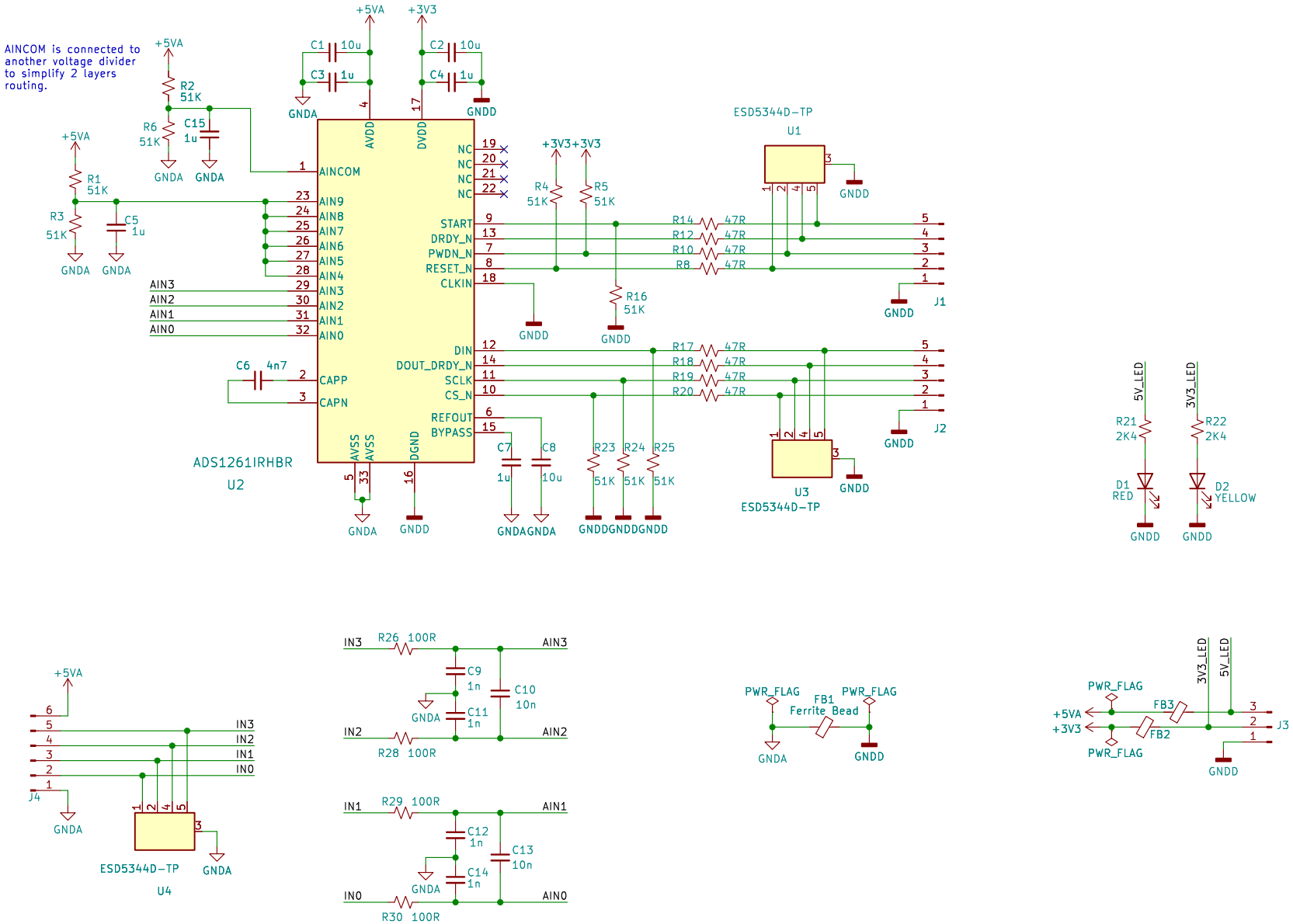
AINCOM is connected to another voltage divider to simplify 2 layers routing.
ADS1261IRHBR
U2
ESD5344D-TP
U1
U3
U4
J1
J2
J3
J4
AIN3
AIN2
AIN1
AIN0
IN3
IN2
IN1
IN0
START
DRDY_N
PWDN_N
RESET_N
CLKIN
DIN
DOUT_DRDY_N
SCLK
CS_N
REFOUT
BYPASS
AINCOM
CAPP
CAPN
AVDD
DVDD
AVSS
DGND
NC
+5VA
+3V3
GNDA
GNDD
5V_LED
3V3_LED
D1
RED
D2
YELLOW
PWR_FLAG
FB1
Ferrite Bead
FB2
FB3