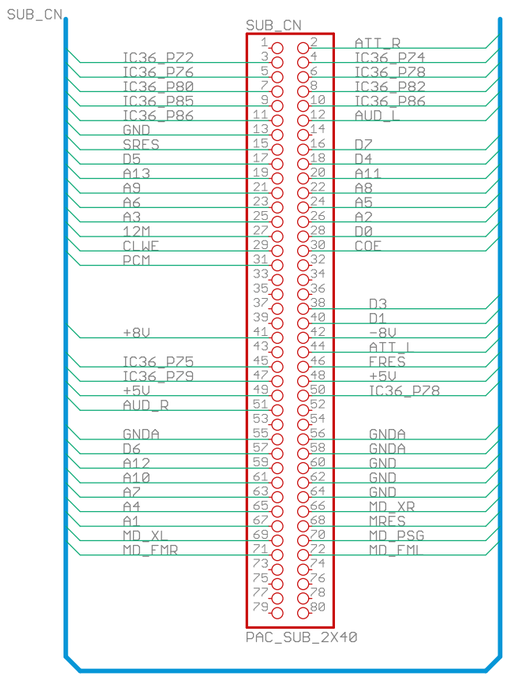

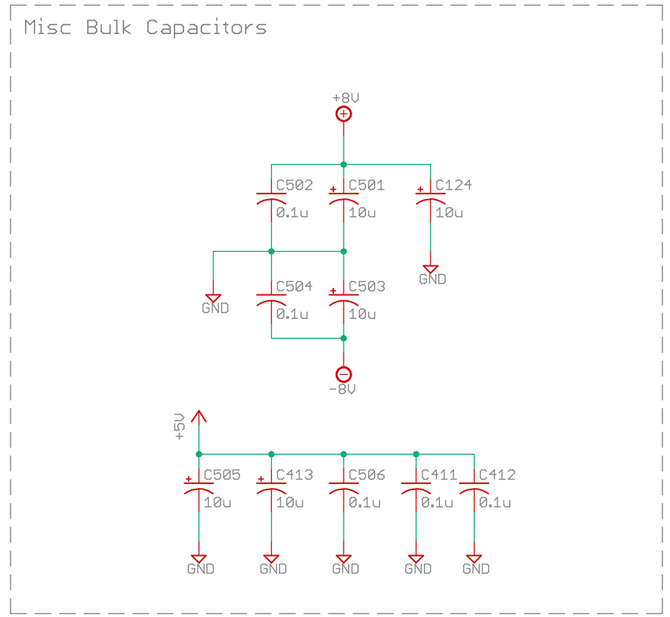

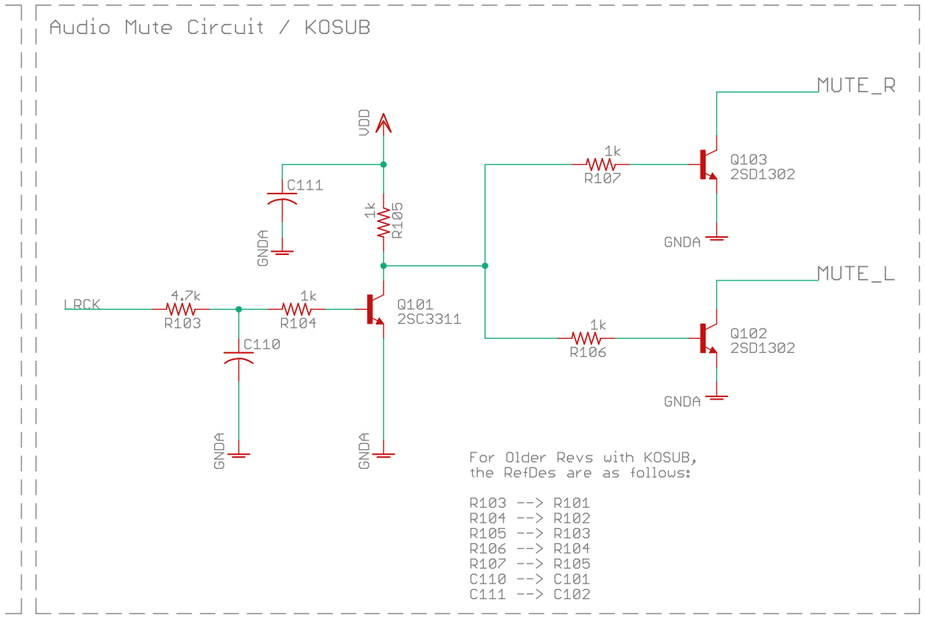

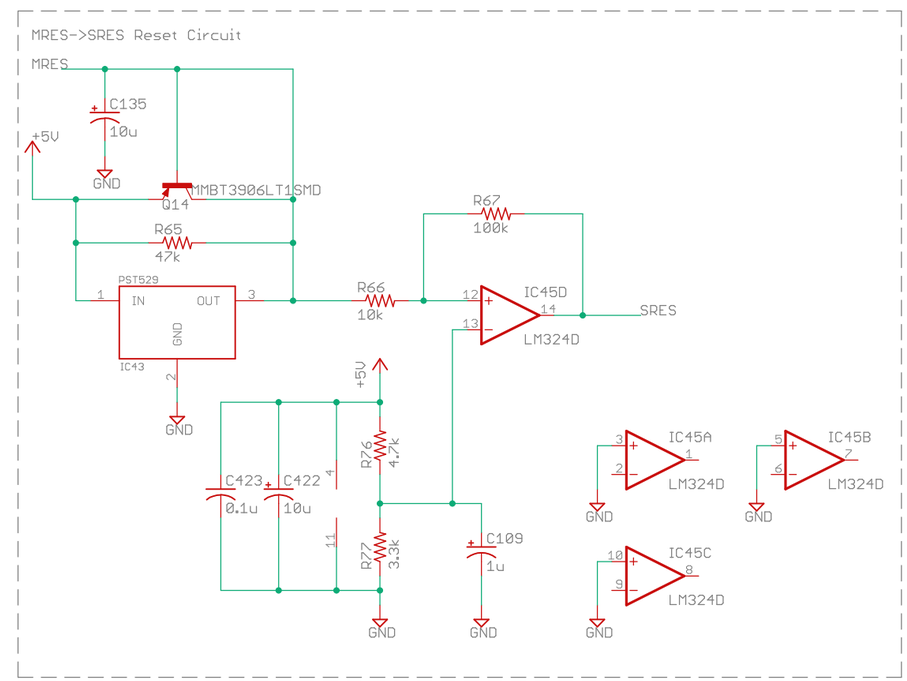

TITLE: PAC-S10 & S1 SSUB

Document Number:

REV:

Date: 7/15/2022 11:08 AM

Sheet: 1/4