Order No. MD0403084C2

Service Manual

DVD Stereo System

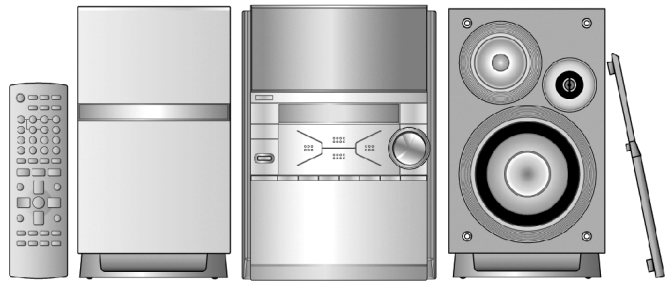

SA-PM39DE
SA-PM39DEB
SA-PM39DEG

Colour

(S) ... Silver Type

Specification

n Amplifier Section

RMS Output Power Stereo mode (Both channel driven)	
10% Total harmonic distortion	
1 kHz, (Low channel)	35 W per channel (6Ω)
8 kHz, (High channel)	35 W per channel (6Ω)
Total RMS Stereo mode power	140 W
DIN Output Power Stereo mode (Both channel driven)	
1% Total harmonic distortion	
1 kHz, (Low channel)	25 W per channel (6Ω)
8 kHz, (High channel)	25 W per channel (6Ω)
Total DIN Stereo mode power	100 W

n FM Tuner Section

Frequency range	87.50 - 108.00 MHz (50 kHz steps)
Sensitivity	1.6 µV (IHF)
S/N 26 dB	1.5 µV
Antenna terminal(s)	75 Ω (unbalanced)
Preset stations	15

n AM Tuner Section

Frequency range	522 - 1629 kHz (9 kHz steps)
Sensitivity	
S/N 20 dB (at 999 kHz)	560 µV/m
Preset stations	15
Phone jack	
Terminal	Stereo 3.5 mm jack

n Cassette Deck Section

Track system	4 track, 2 channel
Heads	
Record/playback	Solid permalloy head
Erasure	Double gap ferrite head
Motor	DC servo motor
Recording system	AC bias 100 kHz AC erase 100 kHz
Tape speed	4.8 cm/s
Overall frequency response (+3 to -6 dB at Deck Out)	
Normal (Type I)	35 Hz - 14 kHz
S/N ratio	50 dB (A weighted)
Wow and flutter	0.18% (WRMS)
Fast forward and rewind times	Approx. 120 seconds with C-60 cassette tape

n Disc Section

Disc played [8cm or 12 cm]

1. DVD-RAM (DVD-VR compatible, JPEG formatted disc)
2. DVD-Audio
3. DVD-Video
4. DVD-R (DVD-Video compatible)
5. CD-Audio (CD-DA)
6. Video CD
7. SVCD (Conforming to IEC62107)

Panasonic

© 2004 Panasonic AVC Networks Singapore Pte. Ltd. All rights reserved. Unauthorized copying and distribution is a violation of law.

8. CD-R/CD-RW
(CD-DA, Video-CD, SVCD, MP3, WMA, JPEG formatted disc)
9. MP3/WMA*
- Compatible compression rate:
  MP3: between 32 kbps and 320 kbps
  WMA: between 48 kbps and 320 kbps
10. JPEG*
- Exif Ver 2.1 JPEG Baseline files
- Picture resolution:
  between 320 x 240 and 6144 x 4096 pixels
  (Sub sampling is 4:2:2 or 4:2:0)
11. HighMAT Level 2 (Audio and Image)

* The total combined maximum number of recognizable audio and picture contents and groups: 4000 audio and picture contents and 400 groups.

Video system	PAL625/50, PAL525/60, NTSC
Composite video output	
Output level	1 Vp-p (75Ω)
Terminal	Pin jack (1 system)
S-Video output	
Y output level	1 Vp-p (75Ω)
C output level	0.3 Vp-p (75Ω)(PAL) 0.286 Vp-p (75Ω)(NTSC)
Terminal	S terminal (1 system)
RGB video output	
R output level	0.7 Vp-p (75Ω)
G output level	0.7 Vp-p (75Ω)
B output level	0.7 Vp-p (75Ω)
Terminal	SCART jack (1 system)
Audio output	
Number of channels	2
Digital audio output	
Optical digital output	Optical terminal
Pick up	
Wavelength	
DVD	662 nm
CD	785 nm
Laser power	CLASS 2/CLASS 3a
n General	
Power supply	
For EB	AC 230 - 240 V, 50 Hz
For E/EG	AC 230 V, 50 Hz
Power consumption	125 W
Power consumption (standby mode)	0.7 W
Dimensions (W x H x D)	174.6 x 251 x 376 mm
Mass	5.8 kg
Operating temperature range	+5°C to + 35°C (+41°F to +95°F)
Operating humidity range	5% to 90% RH (no condensation)
n System	
n System: SC-PM39D E-S	Music Center: SA-PM39D E-S Speaker: SB-PM39 EG-M
n System: SC-PM39D EB-S	Music Center: SA-PM39D EB-S Speaker: SB-PM39 EG-M
n System: SC-PM39D EG-S	Music Center: SA-PM39D EG-S Speaker: SB-PM39 EG-M

Notes:
1. Specifications are subject to change without notice.
   Mass and dimensions are approximate.
2. Total harmonic distortion is measured by the digital spectrum analyzer.

⚠ WARNING

This service information is designed for experienced repair technicians only and is not designed for use by the general public.
It does not contain warnings or cautions to advise non-technical individuals of potential dangers in attempting to service a product.
Products powered by electricity should be serviced or repaired only by experienced professional technicians. Any attempt to service or repair the product or products dealt with in this service information by anyone else could result in serious injury or death.

CONTENTS

	Page
1 Caution for AC Mains Lead	**4**
2 Before Repair and Adjustment	**5**
3 Protection Circuitry	**5**
4 Prevention of Electro Static Discharge (ESD) to Electrostatically Sensitive (ES) Devices	**5**
5 Handling the Lead-free Solder	**6**
5.1. About lead free solder (PbF)	6
6 Handling Precautions For Traverse Deck	**6**
7 Precaution of Laser Diode	**7**
8 Accessories	**9**
9 Operating Instructions	**10**
10 About HighMAT	**12**
10.1. What is HighMAT?	12
10.2. Why use HighMAT?	12
10.3. The advantages of using HighMAT	12
10.4. Outline of the HighMAT standard	13
11 Disassembly and Main Component Replacement Procedures.	**15**
11.1. Disassembly flow chart	15
11.2. Disassembly of Side Panel (L) & (R)	16
11.3. Disassembly of Top Cabinet Unit	16
11.4. Disassembly of Deck Mechanism Unit and Tape Eject P.C.B.	16
11.5. Disassembly of Front Panel Unit	17
11.6. Disassembly of Panel P.C.B.	18
11.7. Disassembly of Rear Panel	19

11.8. Disassembly of Tuner Pack ---- 19
11.9. Disassembly of Main P.C.B. and Scart Terminal P.C.B. ---- 20
11.10. Disassembly of Transformer P.C.B. ---- 21
11.11. Disassembly of Power P.C.B. & Speaker Terminal P.C.B. ---- 21
11.12. Disassembly of CD Mechanism Unit ---- 22
11.13. Procedure for Replacing Cassette Holder ---- 24
11.14. Procedure for Replacing Pinch Roller and Head Block (Cassette Mechanism Unit) ---- 25
11.15. Procedure for Replacing Motor, Capstan Belt A, Capstan Belt B, and Winding Belt (Cassette Mechanism Unit) ---- 26
11.16. Procedure for Replacing Parts on Mechanism PCB ---- 27
11.17. Procedure for removing CD loading mechanism ---- 28
11.18. CR16 mechanism disassembly procedure ---- 28
11.19. Replacement for traverse deck ---- 35
11.20. Replacement for optical pickup unit (CD mechanism) ---- 36
11.21. CR16 MECHANISM ASSEMBLY PROCEDURE ---- 38
11.22. Disassembly for Traverse Unit ---- 50
11.23. Handling of cassette tape jam ---- 51
12 Self-Diagnosis Function ---- 52
12.1. Automatic Displayed Error Codes ---- 52
12.2. Memorized Error Codes ---- 52
12.3. Service Mode Table 1 ---- 53
12.4. DVD/CD Self-Diagnosis Error Code Description ---- 53
12.5. Error Codes Stored During No Play ---- 54
12.6. Service Mode Table 2 ---- 54
12.7. Tray Lock Function ---- 56
12.8. Things to Do After Repair (Precaution) ---- 57
12.9. Displaying Self-Diagnostic Results ---- 57
12.10. Error detection for CD block ---- 57
12.11. Error detection code for Cassette Mechanism Block ---- 58
13 Cautions To Be Taken During Servicing ---- 59
13.1. Recovery after the dvd player is repaired ---- 59
13.2. DVD Player Firmware Version Upgrade Process ---- 59
13.3. Firmware Version Upgrade Process by Using Disc and Recovery Process ---- 59
13.4. Using Recovery Disc ---- 60
13.5. Total Usage Time Display ---- 60
14 Procedure for Checking Operation of Individual Parts of Cassette Mechanism Unit ---- 61
14.1. Operation Check with Cassette Tape ---- 61
14.2. Operation Check without Cassette Tape ---- 61
15 Measurement And Adjustments ---- 62
15.1. Tuner Section ---- 62
15.2. Cassette Deck Section ---- 62
16 Block Diagram ---- 65
17 Schematic Diagram ---- 75
17.1. Optical Pickup Circuit ---- 76
17.2. (A) DVD Module Circuit ---- 77
17.3. (B) Main Circuit ---- 84
17.4. (C) Panel Circuit & (E) Scart Circuit ---- 89
17.5. (H) Deck Circuit, (I) Tape Eject Circuit & (J) Deck Mechanism Circuit ---- 91
17.6. (F) Power Circuit ---- 93
17.7. (D) Speaker Circuit & (G) Transformer Circuit ---- 95
17.8. (K) CD Loading Circuit ---- 96
18 Printed Circuit Board ---- 97
18.1. (A) DVD Module P.C.B. (Side: A & B) ---- 97
18.2. (B) Main P.C.B. ---- 99
18.3. (C) Panel P.C.B. ---- 101
18.4. (D) Speaker P.C.B. & (E) Scart P.C.B. ---- 102
18.5. (F) Power P.C.B. ---- 103
18.6. (G) Transformer P.C.B. ---- 105
18.7. (H) Deck P.C.B. & (I) Tape Eject P.C.B. ---- 106
18.8. (J) Deck Mechanism P.C.B. & (K) CD Loading P.C.B. ---- 107
19 Wiring Connection Diagram ---- 108
20 Type Illustrations of ICs, Transistors & Diodes ---- 110
21 Terminal Function of IC 痴 ---- 111
21.1. IC2801(C2CBJG000403) System Microprocessor ---- 111
22 Troubleshooting Flowchart (CD Section Circuit) ---- 112
23 Parts Location and Replacement Parts List ---- 114
23.1. Deck Mechanism (RAA4110-S) ---- 115
23.2. CD Loading Mechanism ---- 117
23.3. Cabinet ---- 120
23.4. Electrical Parts List ---- 124
23.5. Packing Materials & Accessories Parts List ---- 133
23.6. Packaging ---- 134

1 Caution for AC Mains Lead

(For "EB" area code model only.)

For your safety, please read the following text carefully.

This appliance is supplied with a moulded three pin mains plug for your safety and convenience.
A 5-ampere fuse is fitted in this plug.
Should the fuse need to be replaced please ensure that the replacement fuse has a rating of 5-ampere and that it is approved by ASTA or BSI to BS1362.

Check for the ASTA mark or the BSI mark on the body of the fuse.

If the plug contains a removable fuse cover you must ensure that it is refitted when the fuse is replaced.
If you lose the fuse cover, the plug must not be used until a replacement cover is obtained.
A replacement fuse cover can be purchased from your local dealer.

CAUTION!
IF THE FITTED MOULDED PLUG IS UNSUITABLE FOR THE SOCKET OUTLET IN YOUR HOME THEN THE FUSE SHOULD BE REMOVED AND THE PLUG CUT OFF AND DISPOSED OFF SAFELY.
THERE IS A DANGER OF SEVERE ELECTRICAL SHOCK IF THE CUT OFF PLUG IS INSERTED INTO ANY 13-AMPERE SOCKET.

If a new plug is to be fitted, please observe the wiring code as shown below.
If in any doubt please consult a qualified electrician.

IMPORTANT

The wires in this mains lead are coloured in accordance with the following code:

Blue: Neutral
Brown: Live

As these colours may not correspond with the coloured markings identifying the terminals in your plug, proceed as follows:
The wire which is coloured Blue must be connected to the terminal which is marked with the letter N or coloured Black or Blue.

The wire which is coloured Brown must be connected to the terminal which is marked with the letter L or coloured Brown or Red.

WARNING: DO NOT CONNECT EITHER WIRE TO THE EARTH TERMINAL WHICH IS MARKED WITH THE LETTER E, BY THE EARTH SYMBOL ⏚ OR COLOURED GREEN OR GREEN/YELLOW.

THIS PLUG IS NOT WATERPROOF—KEEP DRY.

Before use

Remove the connector cover.

How to replace the fuse

The location of the fuse differ according to the type of AC mains plug (figures A and B). Confirm the AC mains plug fitted and follow the instructions below.
Illustrations may differ from actual AC mains plug.

1. Open the fuse cover with a screwdriver.

Figure A

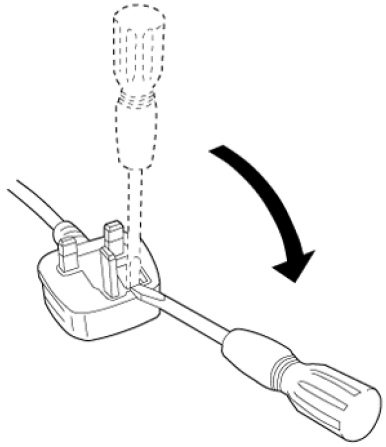

Figure B

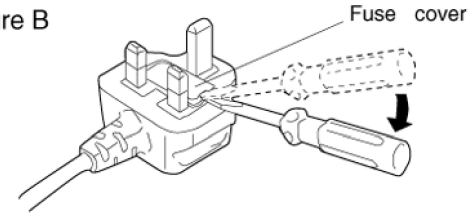

2. Replace the fuse and close or attach the fuse cover.

Figure A

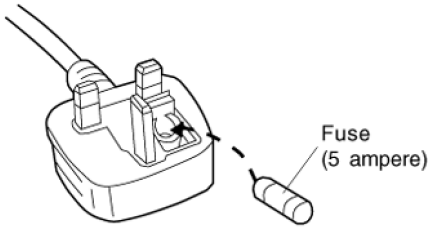

Figure B

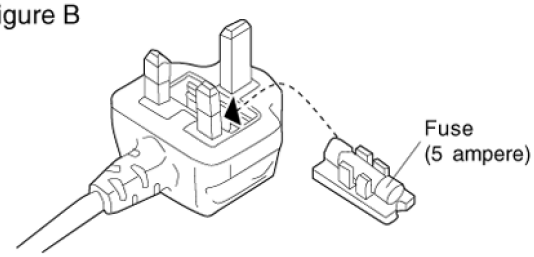

2 Before Repair and Adjustment

Disconnect AC power, discharge Power Supply Capacitors C5802, C5803, C5804 and C5902 through a 10 Ω, 1 W resistor to ground. DO NOT SHORT-CIRCUIT DIRECTLY (with a screw driver blade, for instance), as this may destroy solid state devices.

After repairs are completed, restore power gradually using a variac, to avoid over current.

Current consumption at AC 230 V, 50 Hz in NO SIGNAL mode should be ~300 mA. (For E/EG only)

Current consumption at AC 230~240 V, 50 Hz in NO SIGNAL mode should be ~300 mA. (For EB only)

3 Protection Circuitry

The protection circuitry may have operated if either of the following conditions are noticed:

- No sound is heard when the power is turned on.
- Sound stops during a performance.

The function of this circuitry is to prevent circuitry damage if, for example, the positive and negative speaker connection wires are "shorted", or if speaker systems with an impedance less than the indicated rated impedance of the amplifier are used.

If this occurs, follow the procedure outlines below:

1. Turn off the power.
2. Determine the cause of the problem and correct it.
3. Turn on the power once again after one minute.

Note :

When the protection circuitry functions, the unit will not operate unless the power is first turned off and then on again.

4 Prevention of Electro Static Discharge (ESD) to Electrostatically Sensitive (ES) Devices

Some semiconductor (solid state) devices can be damaged easily by electricity. Such components commonly are called Electrostatically Sensitive (ES) Devices. Examples of typical ES devices are integrated circuits and some field-effect transistors and semiconductor "chip" components. The following techniques should be used to help reduce the incidence of component damage caused by electro static discharge (ESD).

1. Immediately before handling any semiconductor component or semiconductor-equiped assembly, drain off any ESD on your body by touching a known earth ground. Alternatively, obtain and wear a commercially available discharging ESD wrist strap, which should be removed for potential shock reasons prior to applying power to the unit under test.
2. After removing an electrical assembly equiped with ES devices, place the assembly on a conductive surface such as aluminium foil, to prevent electrostatic charge build up or exposure of the assembly.
3. Use only a grounded-tip soldering iron to solder or unsolder ES devices.
4. Use only an anti-static solder remover device. Some solder removal devices not classified as "anti-static (ESD protected)" can generate electrical charge to damage ES devices.
5. Do not use freon-propelled chemicals. These can generate electrical charges sufficient to damage ES devices.
6. Do not remove a replacement ES device from its protective package until immediately before you are ready to install it. (Most replacement ES devices are packaged with leads electrically shorted together by conductive foam, aluminium foil or comparable conductive material).
7. Immediately before removing the protective material from the leads of a replacement ES device, touch the protective material to the chassis or circuit assembly into which the device will be installed.

   Caution

   Be sure no power is applied to the chassis or circuit, and observe all other safety precautions.
8. Minimize body motions when handling unpackaged replacement ES devices. (Otherwise harmless motion such as the brushing together of your clothes fabric or the lifting of your foot from a carpeted floor can generate static electricity (ESD) sufficient to damage an ES device).

IMPORTANT SAFETY NOTICE

There are special components used in this equipment which are imporant for safety.
These parts are marked by ⚠ in the schematic diagrams, Exploded Views and replacement parts list. It is essential that these critical parts should be replaced with manufacturer's specified parts to prevent shock, fire, or other hazards. Do not modify the original design without permission of manufacturer.

5 Handling the Lead-free Solder

5.1. About lead free solder (PbF)

Distinction of PbF P.C.B.:

P.C.B.s (manufactured) using lead free solder will have a PbF stamp on the P.C.B.

Caution:

- Pb free solder has a higher melting point than standard solder; Typically the melting point is 50 - 70°F (30 - 40°C) higher. Please use a high temperature soldering iron. In case of soldering iron with temperature control, please set it to 700 ± 20°F (370 ± 10°C).
- Pb free solder will tend to splash when heated too high (about 1100°F/600°C).
- When soldering or unsoldering, please completely remove all of the solder on the pins or solder area, and be sure to heat the soldering points with the Pb free solder until it melts enough.

6 Handling Precautions For Traverse Deck

The laser diode in the traverse deck (optical pickup) may break down due to potential difference caused by static electricity of clothes or human body. So, be careful of electrostatic breakdown during repair of the traverse deck (optical pickup).

- **Handling of traverse deck (optical pickup)**
  1. Do not subject the traverse deck (optical pickup) to static electricity as it is extremely sensitive to electrical shock.
  2. To prevent the breakdown of the laser diode, an antistatic shorting pin is inserted into the flexible board (FFC board).
  3. Take care not to apply excessive stress to the flexible board (FFC board). When removing or connecting the short pin, finish the job in as short time as possible.
  4. Do not turn the variable resistor (laser power adjustment). It has already been adjusted.

- **Grounding for electrostatic breakdown prevention**
  1. Human body grounding

     Use the anti-static wrist strap to discharge the static electricity from your body.
  2. Work table grounding.

     Put a conductive material (sheet) or steel sheet on the area where the traverse deck (optical pickup) is place, and ground the sheet.

Caution:

The static electricity of your clothes will not be grounded through the wrist strap. So, take care not to let your clothes touch the traverse deck (optical pickup).

Caution when replacing the Traverse Deck

The traverse deck has a short point shorted with solder to protect the laser diode against electrostatics breakdown. Be sure to remove the solder from the short point before making connections.

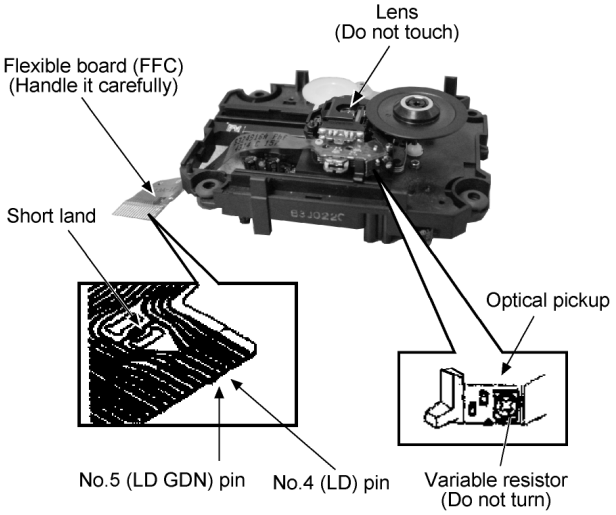

Figure No.6.1

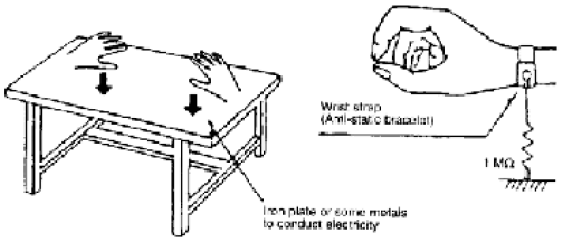

Figure No.6.2

7 Precaution of Laser Diode

Caution :

This product utilizes a laser diode with the unit turned "ON", invisible laser radiation is emitted from the pick up lens.
Maximum output radiation power from pick up : 100 µW/VDE
Laser radiation from pick up unit is safety level, but be sure the followings:

Wavelength: 662nm(DVD)/785nm(CD).

1. Do not disassemble the optical pick up unit, since radiation from exposed laser diode is dangerous.
2. Do not adjust the variable resistor on the pick up unit. It was already adjusted.
3. Do not look at the focus lens using optical instruments.
4. Recommend not to look at pick up lens for a long time.

CAUTION!
THIS PRODUCT UTILIZES A LASER.
USE OF CONTROLS OR ADJUSTMENTS OR PERFORMANCE OF PROCEDURES OTHER THAN THOSE SPECIFIED HEREIN MAY RESULT IN HAZARDOUS RADIATION EXPOSURE.

ACHTUNG :

Dieses Produkt enthält eine Laserdiode. Im eingeschalteten Zustand wird unsichtbare Laserstrahlung von der Lasereinheit abgestrahlt.
Wellenlänge : 662nm(DVD)/785nm(CD).
Maximale Strahlungsleistung der Lasereinheit :100 µW/VDE
Die Strahlung an der Lasereinheit ist ungefährlich, wenn folgende Punkte beachtet werden:

1. Die Lasereinheit nicht zerlegen, da die Strahlung an der freigelegten Laserdiode gefährlich ist.
2. Den werkseitig justierten Einstellregler der Lasereinhit nicht verstellen.
3. Nicht mit optischen Instrumenten in die Fokussierlinse blicken.
4. Nicht über längere Zeit in die Fokussierlinse blicken.

ADVARSEL: I dette a apparat anvendes laser.

n Use of Caution Labels

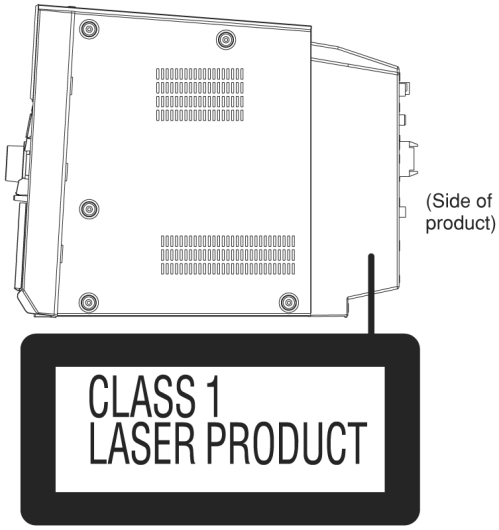

LUOKAN 1 LASERLAITE
KLASS 1 LASER APPARAT

CAUTION	–	LASER RADIATION WHEN OPEN DO NOT STARE NTO BEAM. FDA 21 CFR / Class II
CAUTION	–	VISIBLE AND INVISIBLE LASER RADIATION WHEN OPEN AVO D EXPOSURE TO BEAM IEC60825 1 / Class 3b
VARNING	–	SYNLIG OCH OSYNLIG LASERSTRÅLNING NÄR DENNA DEL ÄR ÖPPNAD. BETRAKTA EJ STRÅLEN.
ADVARSEL	–	SYNLIG OG USYNLIG LASERSTRÅL NG VED ÅBNING UNDGÅ UDS/ÆTTELSE FOR STRÅLING
ADVARSEL	–	SYNLIG OG USYNLIG LASERSTRÅL NG NÅR DEKSEL ÅPNES. UNNGÅ EKSPONERING FOR STRÅLEN.
VARO!		AVATTAESSA OLET ALTTIINA NÄKYVÄÄ JA NÄKYMÄTÖN LASERSÄTE LYLLE. ÄLÄ KATSO SÄTEESEEN.
VORSICHT	–	SICHTBARE UND UNSICHTBARE LASERSTRAHLUNG WENN ABDECKUNG GEÖFFNET. NIC'HT DEM STRAHL AUSSETZEN.
ATTENTION	–	RAYONNEMENT LASER VIS BLE ET NV S BLE EN CAS D OUVERTURE EXPOSITION DANGEREUSE AU FAISCEAU
注意		打开时有可见及不可见激光辐射，避免激光光照射。
注意		ここを開くと可視及び不可視レーザー光が出ます。 ビームを見たり、触れたりしないで下さい。

(Inside of product)
(Tuotteen sisällä)
(Produktets innside)

8 Accessories

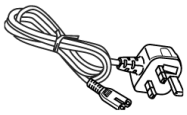

AC Main Lead (For EB only)

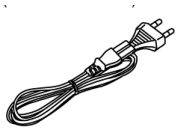

AC Main Lead (For E & EG only)

AM Loop Antenna

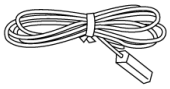

FM Indoor Antenna

Video Cable

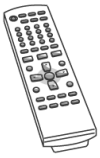

Remote Control Transmitter

Antenna plug adaptor (For EB only)

9 Operating Instructions

Main unit

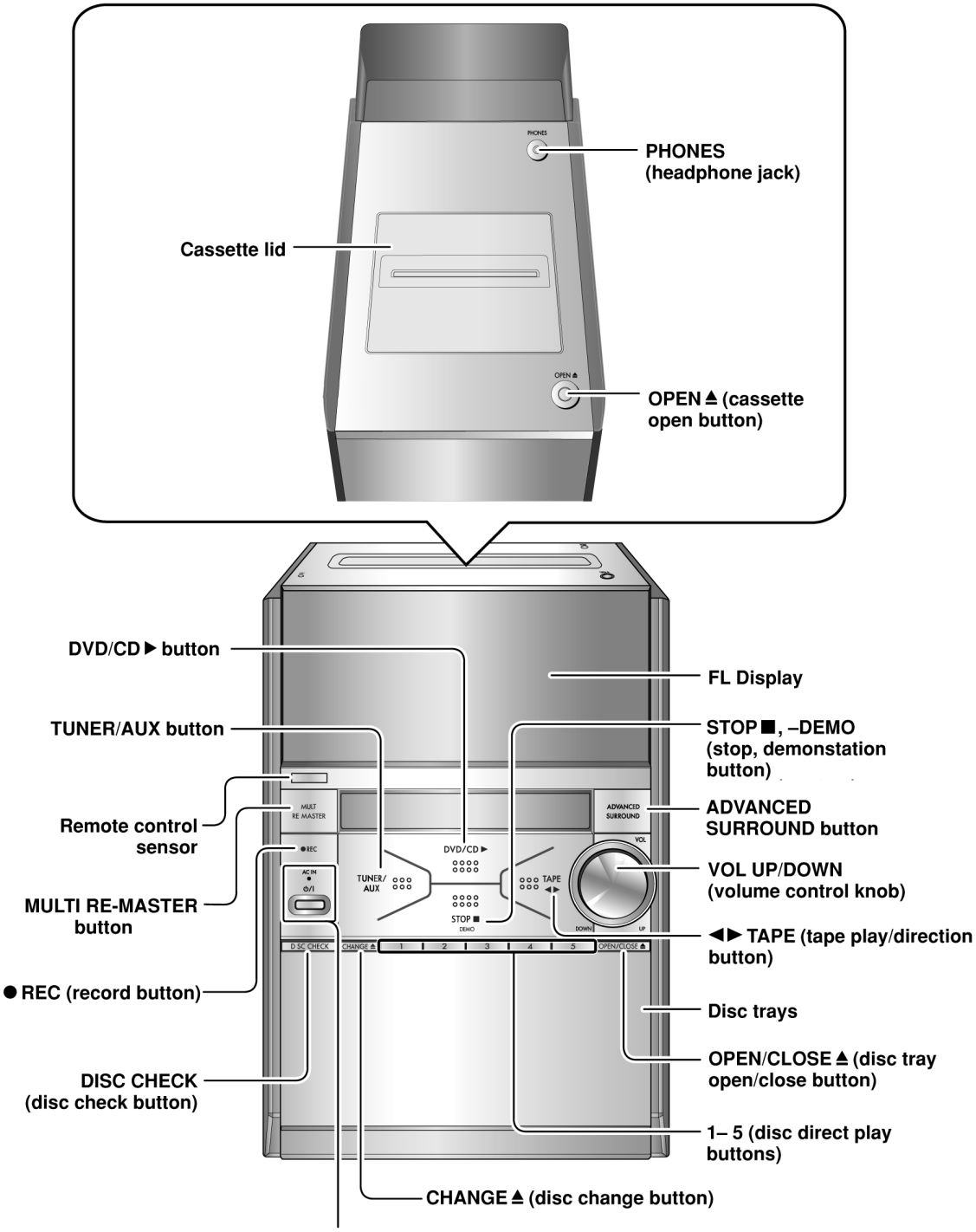

AC IN (AC supply indicator)
This indicator lights when the unit is connected to the AC mains supply.
⏻/| (standby/on switch)
Press to switch the unit from on to standby mode or vice versa.
In standby mode, the unit is still consuming a small amount of power.

Remote control

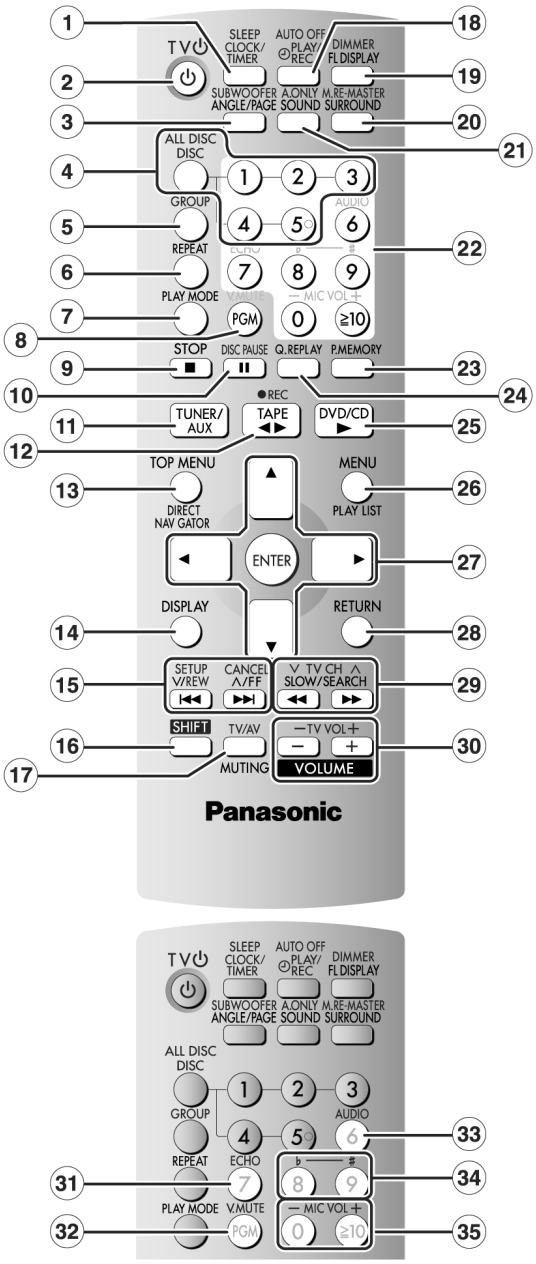

① **Clock/timer, Sleep timer button [CLOCK/TIMER, SLEEP]**

② **Standby/on, TV standby/on switch [⏻, TV ⏻]**

③ **Angle/Page, Subwoofer button [ANGLE/PAGE, SUBWOOFER]**

④ **Disc select, All disc button [DISC, ALL DISC], Disc buttons [1–5]**

⑤ **Group button [GROUP]**

⑥ **Repeat button [REPEAT]**

⑦ **Play mode select button [PLAY MODE]**

⑧ **Program button [PGM]**

⑨ **Stop button [■ STOP]**

⑩ **Disc pause button [II DISC PAUSE]**

⑪ **Tuner/aux button [TUNER/AUX]**

⑫ **Tape play/direction, Record button [◀ ▶ TAPE, ●REC]**

⑬ **Top menu, Direct navigator button [TOP MENU, DIRECT NAVIGATOR]**

⑭ **Display button [DISPLAY]**

⑮ **Disc skip, tape fast-forward/rewind, preset channel select, time adjust, Setup, Cancel buttons [I◀◀ ▶▶I, ∨/REW, ∧/FF, SETUP, CANCEL]**

⑯ **Shift button [SHIFT]**
To use functions labelled in orange:
While pressing [SHIFT], press the corresponding button.

⑰ **Muting, TV/AV button [MUTING, TV/AV]**

⑱ **Play timer/record timer, Auto off button [⏲PLAY/REC, AUTO OFF]**

⑲ **FL display, Dimmer button [FL DISPLAY, DIMMER]**

⑳ **Surround, Multi re-master button [SURROUND, M.RE-MASTER]**

㉑ **Sound, Audio only button [SOUND, A.ONLY]**

㉒ **Numbered buttons [0 – 9, ≧10]**

㉓ **Position memory button [P.MEMORY]**

㉔ **Quick replay button [Q.REPLAY]**

㉕ **DVD/CD play button [▶ DVD/CD]**

㉖ **Menu, Playlist button [MENU, PLAY LIST]**

㉗ **Cursor buttons [▲, ▼, ◀, ▶], Enter button [ENTER]**

㉘ **Return button [RETURN]**

㉙ **Slow/search, tuning, character skip buttons [◀◀, ▶▶ SLOW/SEARCH]**
These buttons also have the following functions.
[◀◀, ▶▶]: TV channel select buttons [TV CH ∨, ∧].

㉚ **Volume buttons [– , + , VOLUME]**
These buttons also have the following functions.
[– , +]: TV volume buttons [TV VOL –, +]

10 About HighMAT

10.1. What is HighMAT?

This word combines the abbreviations of Matsushita Electric Industrial Co. Ltd. and High Performance Media Access Technology, and is a trademark of Microsoft Corporation. The products with the HighMAT logo shown below are made according to the HighMAT standard.

HighMAT is a format that allows users to save digital contents such as photographs, audio, and images on a CD. This gives consistency in the way of reading data when general consumer products (such as DVD players) and PCs are used, and thus, it is easy to operate for the user.

10.2. Why use HighMAT?

Up to now, there was no harmonized standard from playing digital content stored in CD-ROM formats (including CD-R) on consumer products like DVD players.Therefore, we used to have problems such as follow:

- There was no common play list or attached information on contents, which is called metadata.
- The data compression method differed according to the equipment.
- As the number of CD-ROMs recorded increased retrieved the contents became more difficult.
- Because display and operation methods were different depending on the equipment, the play order of the content on the same disc could change.

10.3. The advantages of using HighMAT

Applying the HighMAT standard will solve the following problems and will improve usability.

- It will create a common user interface for both PC and consumer products.

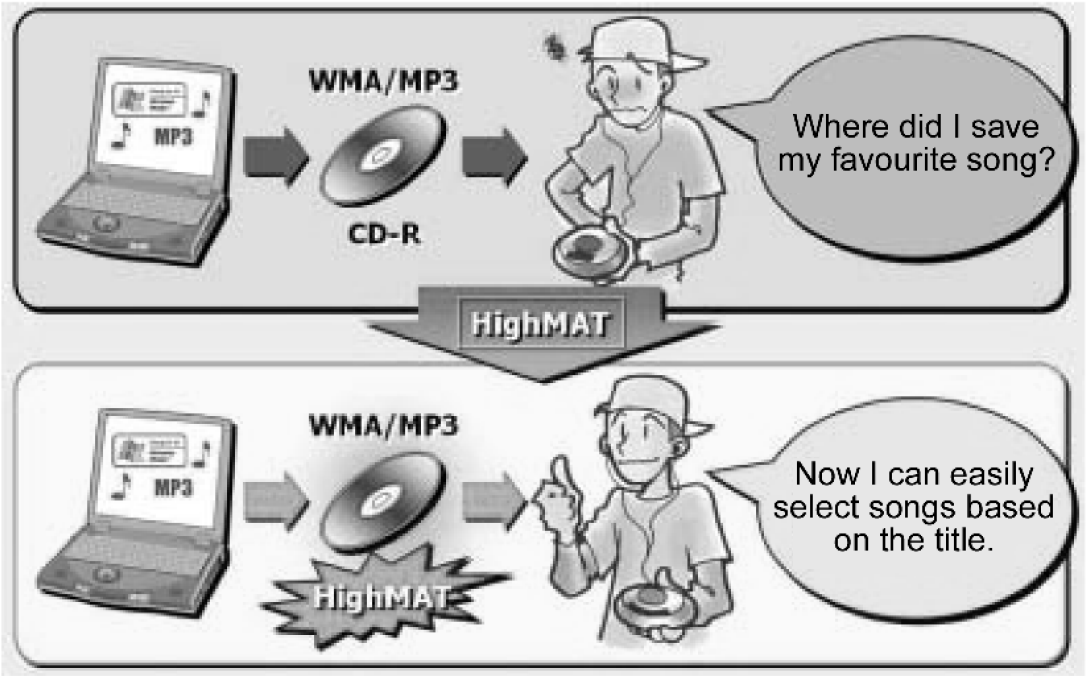

- Regardless of the types of consumer products, such as DVD players, portable CD players, car stereos, and micro computers, a consistent way to pay for digital content will be created and it will make it easier to retrieve data.

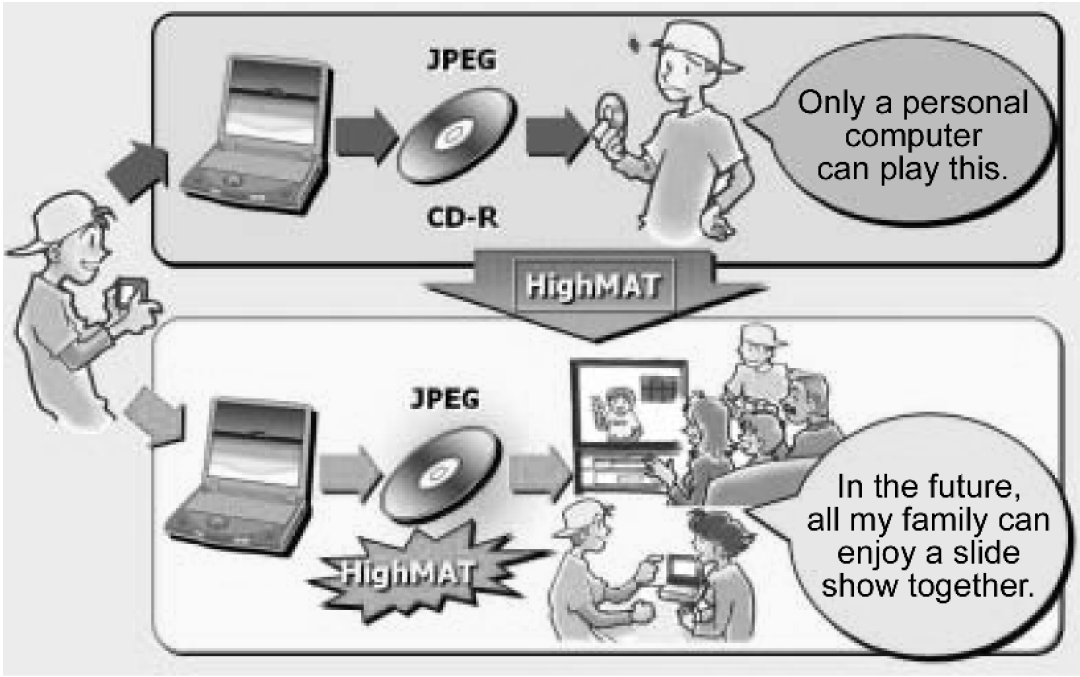

・You can also play digital content on the disc, which was created in accordance with the HighMAT format with a conventional CD-ROM player.

10.4. Outline of the HighMAT standard

1. Recording medium
   - ・CD-R/CD-RW
   - ・Supports ISO 9660 Level Expanded Joliet
   - ・For multiple session

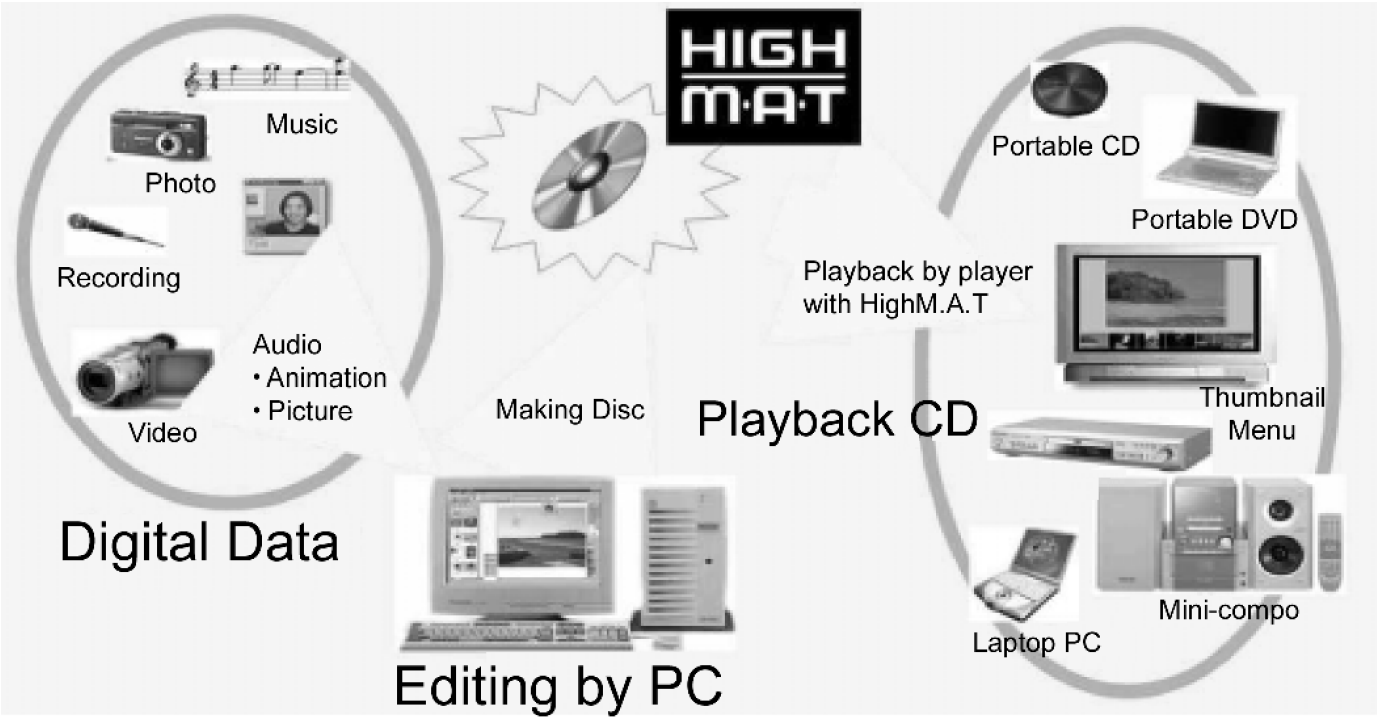

2. Support data format
   - ・Level 1 player: WMA, MP3 (MPEG-1 Audio Layer 3)
   - ・Level 2 player: WMA, MP3 (MPEG-1 Audio Layer 3), JPEG
   - ・Level 3 player: WMA, MP3 (MPEG-1 Audio Layer 3), JPEG, WMV, MPEG4 (optional)
3. Limitation of data format

- WMA, MP3 (MPEG-1 Audio Layer 3) 64 kbps - 160.999 kbps, 44.1 KHz, stereo, fixed bit rate/ variable bit rate.
- WMA, V2 and above, excluding Lossless/Voice/Pro
- JPEG: Max 6M pixel, Maximum file size: 3 MB

4. Limitations regarding the number of files on the media, etc.
   - Total number of audio files: Maximum 450
   - Total number of still picture files: Maximum 999
   - Total number of animation files: Maximum 200
   - Total number of directories: Maximum 400
   - Length of a file name: Maximum 108 characters (Unicode)
   - Total number of play lists: Maximum 200
   - Number of contents in the playlist: Maximum 900
5. Composition of HighMAT disc
   - Menu: Classified for the navigation of the HighMAT digital contents. When menu selected, its submenu or the play list will be displayed.
   - Play list: A list in which one or more digital contents are arranged in order
   - Group: Sub-divided group of a play list.
   - Digital Contents: Audio, still picture, and animation data.

11 Disassembly and Main Component Replacement Procedures.

“ATTENTION SERVICER”

Some chassis components maybe have sharp edges. Be careful when disassembling and servicing.

1. This section describes procedures for checking the operation of the major printed circuit boards and replacing the main components.
2. For reassembly after operation checks or replacement, reverse the respective procedures.
   Special reassembly procedures are described only when required.
3. Select items from the following index when checks or replacement are required.
4. Refer to the Parts No. on the page of “Main component Replacement Procedures”, if necessary.

Warning:

This product uses a laser diode. Refer to “Precaution of Laser Diode”.

ADVARSEL: I dette a apparat anvendes laser.

11.1. Disassembly flow chart

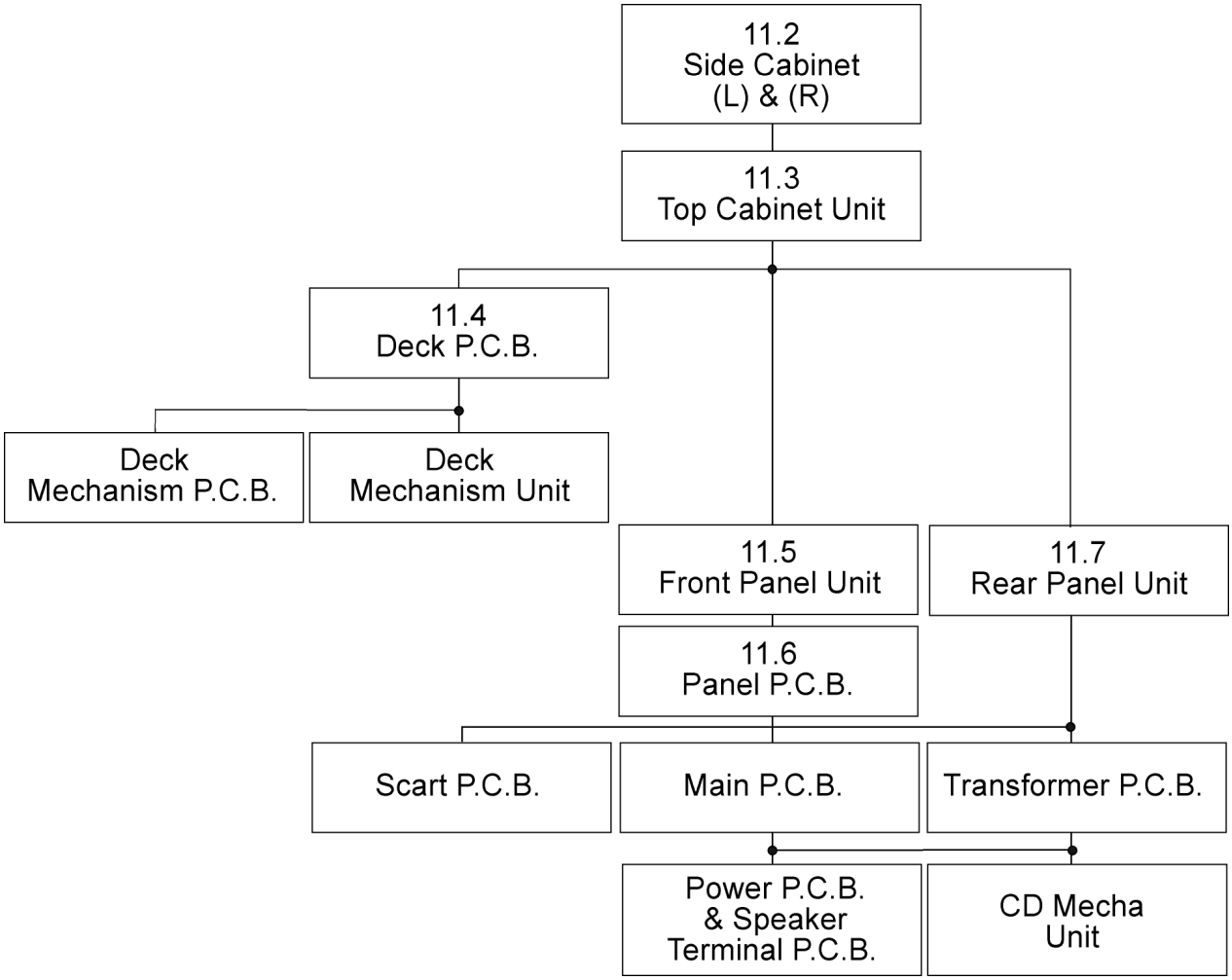

11.2. Disassembly of Side Panel (L) & (R)

Step 1 Remove 5 screws.

Step 2 Remove 1 screw.

Step 3 Remove the panel as arrow shown.

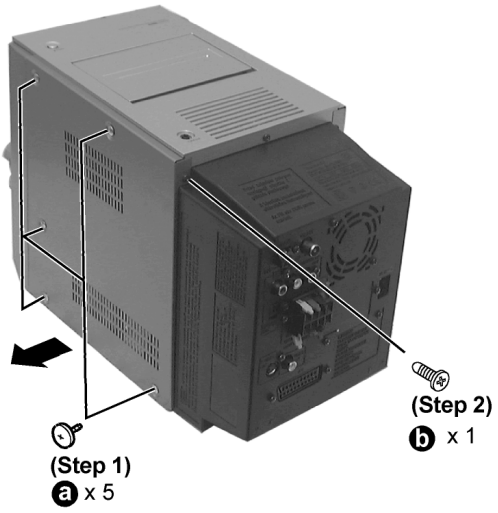

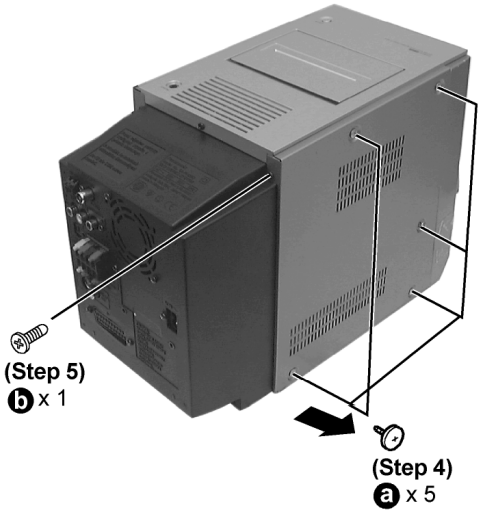

Step 4 Remove 5 screws .

Step 5 Remove 1 screw.

Step 6 Remove the panel as arrow shown.

11.3. Disassembly of Top Cabinet Unit

・Follow the (Step 1) - (Step 4) of Item 11.2

Step 1 Remove screw.

Step 2 Lift up the Top Cabinet unit, pull upward as arrow shown and flip Top Cabinet sideway.

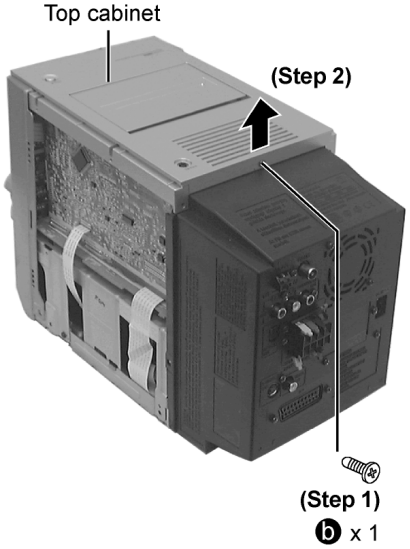

Step 3 Disconnect FFC Board (CN1305).

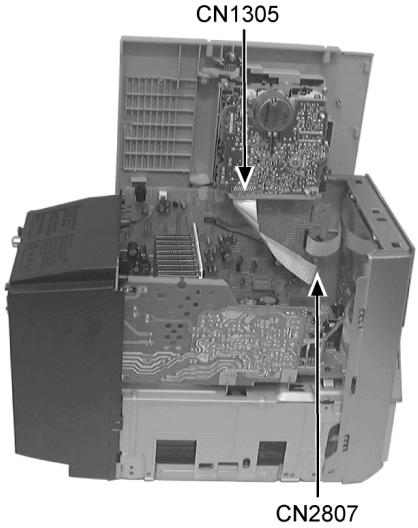

11.4. Disassembly of Deck Mechanism Unit and Tape Eject P.C.B.

・Follow the (Step 1) - (Step 4) of Item 11.2

・Follow the (Step 1) - (Step 3) of Item 11.3

Step 1 Remove 1 screw.

Step 2 Release the catch.

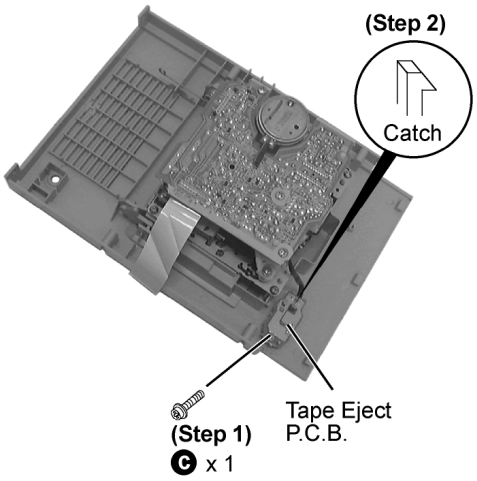

Step 3 Remove 3 screws.

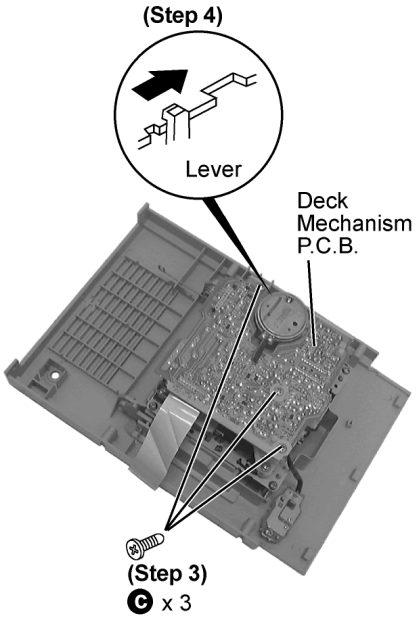

Step 4 Press the lever to open the cassette cover.

Step 5 Remove the cassette mechanism unit.

11.5. Disassembly of Front Panel Unit

・Follow the (Step 1) - (Step 4) of Item 11.2

・Follow the (Step 1) - (Step 3) of Item 11.3

Step 1 Detach connector CN5901.

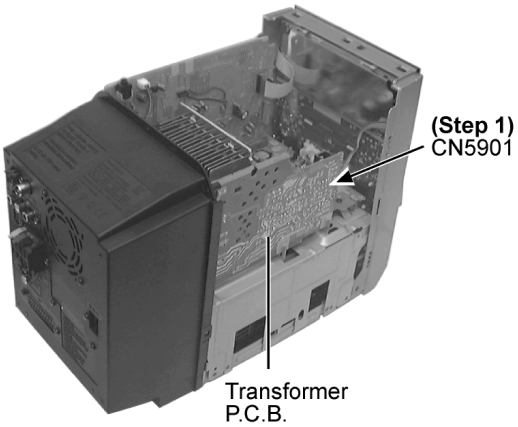

Step 2 Detach FFC board (CN2805).

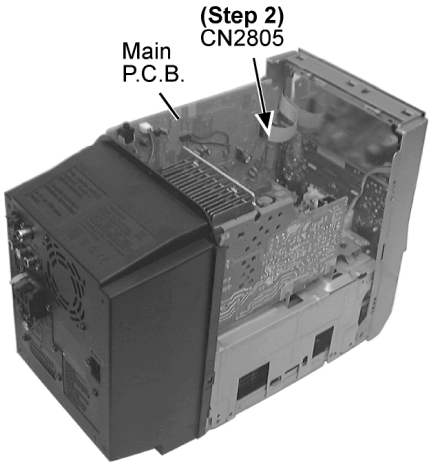

Step 3 Release 3 claws. (2 on the side and 1 at the bottom)

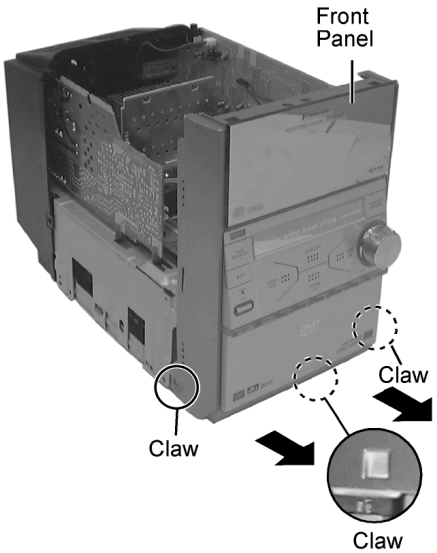

Step 4 Pull the Front Panel unit forward as arrow shown.

・Replacement of CD Lid.

Step 5 Remove 2 screws.

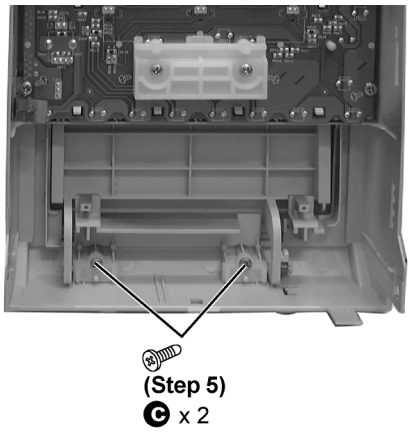

Step 6 Remove spring.

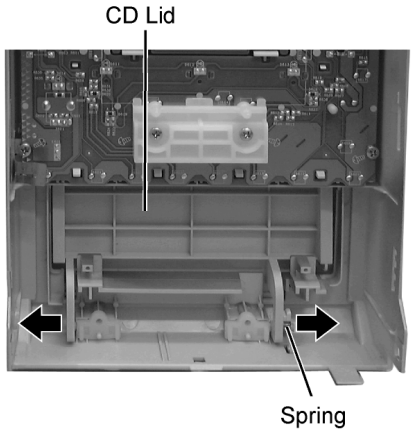

Step 7 Push the CD Lid sideward as arrow shown to remove it.

Note: Be careful of the spring.

11.6. Disassembly of Panel P.C.B.

- Follow the (Step 1) - (Step 4) of Item 11.2
- Follow the (Step 1) - (Step 3) of Item 11.3
- Follow the (Step 1) - (Step 4) of Item 11.5

Step 1 Remove Volume Knob.

Step 2 Remove 8 screws.

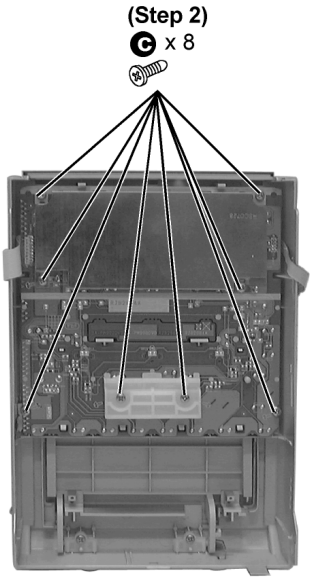

Step 3 Release 6 catches (2 on top & 4 below).

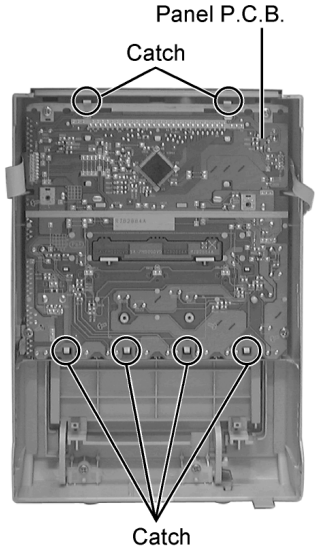

Step 4 Lift up Panel P.C.B..

Note: Replacement of FL Display IC

Step 1 Remove 2 screws.

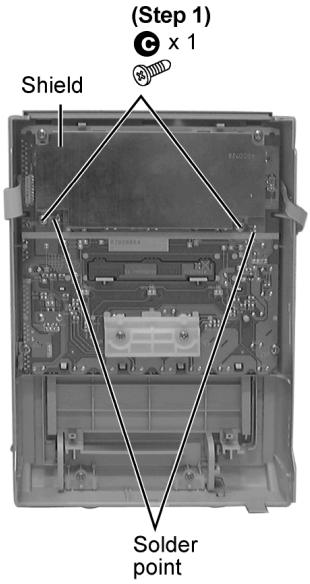

Step 2 Desolder the 2 solder point.

Step 3 Remove shield.

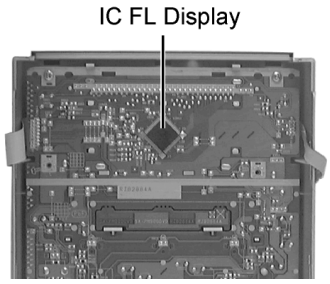

11.7. Disassembly of Rear Panel

- Follow the (Step 1) - (Step 4) of Item 11.2
- Follow the (Step 1) - (Step 3) of Item 11.3

Step 1 Remove 14 screws.

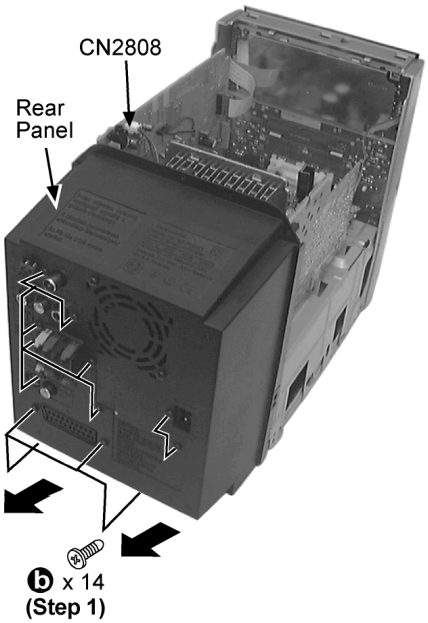

Step 2 Detach connector CN2808 (Fan).

Step 3 Pull the Rear Panel unit backwards as arrow shown.

11.8. Disassembly of Tuner Pack

- Follow the (Step 1) - (Step 4) of Item 11.2
- Follow the (Step 1) - (Step 3) of Item 11.3
- Follow the (Step 1) - (Step 3) of Item 11.7

Step 1 Detach connector CN2804.

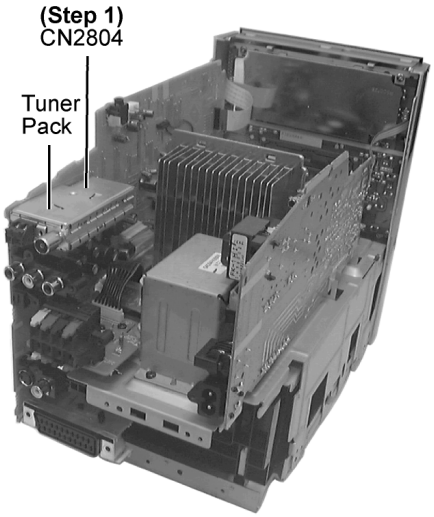

11.9. Disassembly of Main P.C.B. and Scart Terminal P.C.B.

- Follow the (Step 1) - (Step 4) of Item 11.2
- Follow the (Step 1) - (Step 3) of Item 11.3
- Follow the (Step 1) - (Step 3) of Item 11.7
- Follow the (Step 1) of Item 11.8
  - Disassembly of Main P.C.B.

Step 1 Detach 3 connectors CP5802, CP5803 & CP2805.

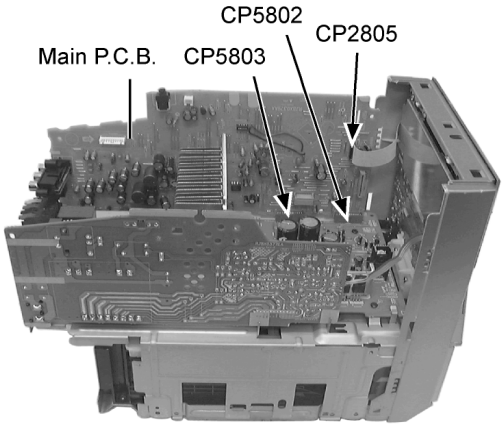

Step 2 Detach FFC board (CN2802 & CN2803).

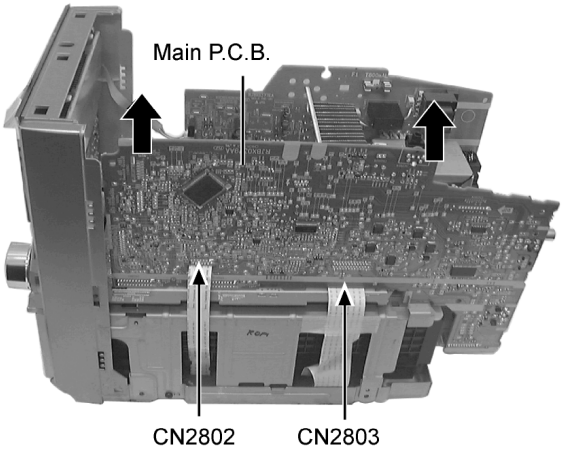

Step 3 Lift Main P.C.B. upward as arrow shown.

Note: Do not exert strong force when lifting up the P.C.B.

- **Disassembly of Scart Terminal P.C.B.**

- Follow the (Step 1) - (Step 4) of Item 11.2
- Follow the (Step 1) - (Step 3) of Item 11.3
- Follow the (Step 1) - (Step 3) of Item 11.7
- Follow the (Step 1) of Item 11.8

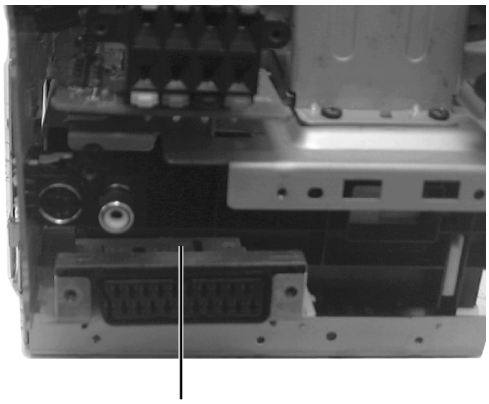

11.10. Disassembly of Transformer P.C.B.

- Follow the (Step 1) - (Step 4) of Item 11.2
- Follow the (Step 1) - (Step 3) of Item 11.3
- Follow the (Step 1) - (Step 3) of Item 11.7

Step 1 Detach connectors CN5901 & CN5801.

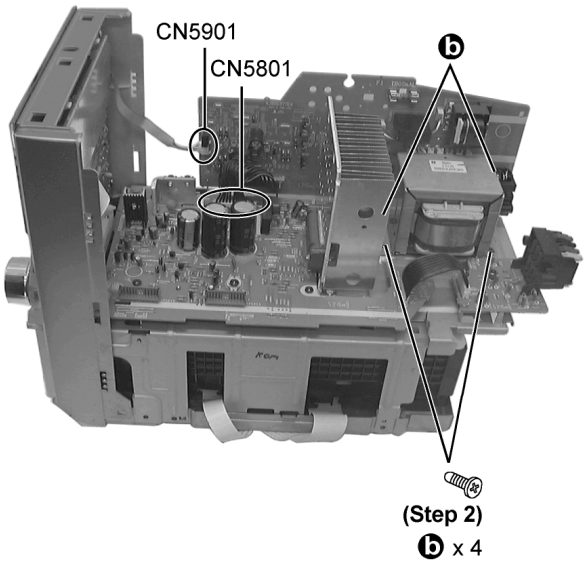

Step 2 Remove 4 mounting screws.

- **Replacement of Power Transformer**.

Step 1 Desolder the terminal points at Transformer P.C.B.

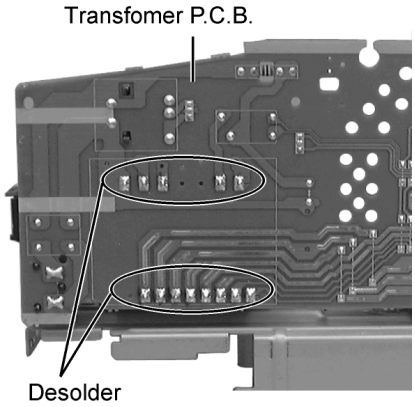

11.11. Disassembly of Power P.C.B. & Speaker Terminal P.C.B.

- Follow the (Step 1) - (Step 4) of Item 11.2
- Follow the (Step 1) - (Step 3) of Item 11.3
- Follow the (Step 1) - (Step 3) of Item 11.7
- Follow the (Step 1) - (Step 3) of Item 11.9
- Follow the (Step 1) - (Step 2) of Item 11.10

Step 1 Remove 4 screws.

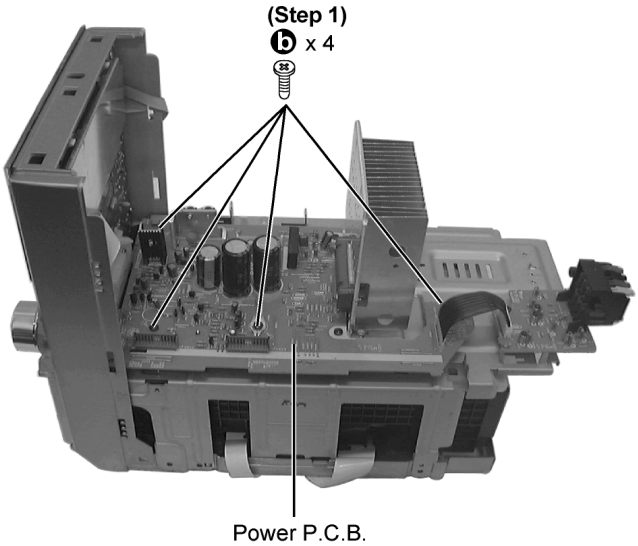

Step 2 Remove 2 screws from heat sink.

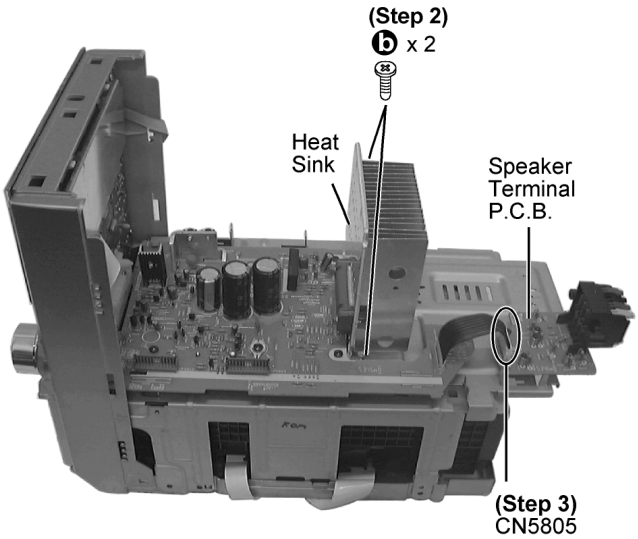

Step 3 Detach connector CN5805.

11.12. Disassembly of CD Mechanism Unit

- Follow the (Step 1) - (Step 3) of Item 11.2
- Follow the (Step 1) - (Step 3) of Item 11.3
- Follow the (Step 1) - (Step 4) of Item 11.5
- Follow the (Step 1) - (Step 3) of Item 11.7
- **Disassembly of Middle Unit**

Step 1 Detach both FFCs (CN2802 & CN2803).

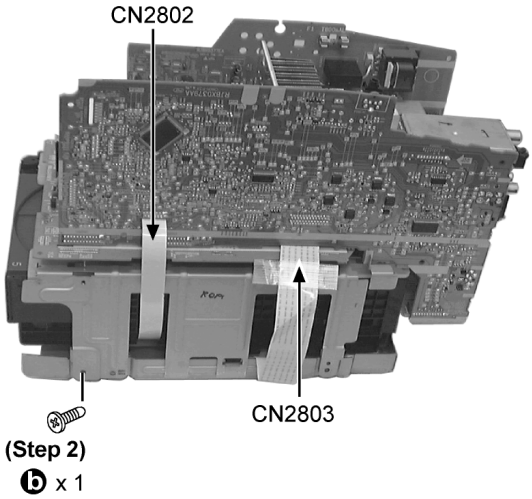

Step 2 Remove 1 screw.

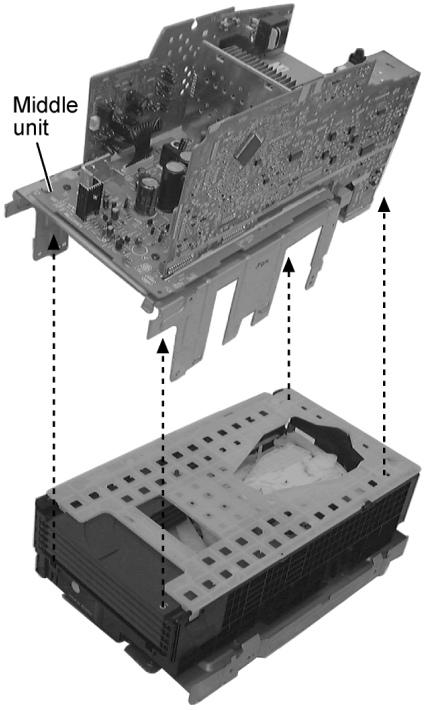

Step 3 Lift up middle unit.

- **Replacement of Power IC**
- Follow the (Step 1) - (Step 4) of item 11.2
- Follow the (Step 1) - (Step 3) of item 11.3
- Follow the (Step 1) - (Step 3) of item 11.7
- Follow the (Step 1) - (Step 2) of item 11.10

Step 1 Remove 2 screws.

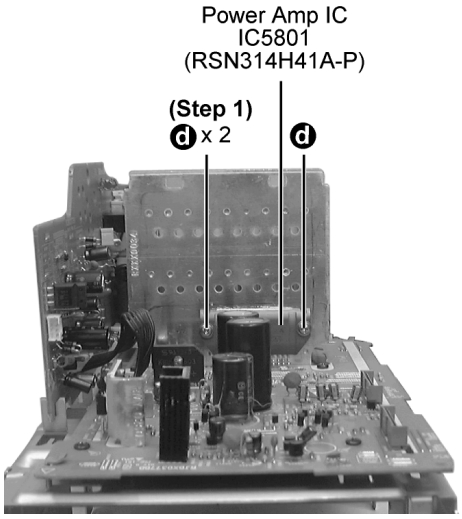

Step 2 Desolder the terminal of Power Amp IC and replace the component.

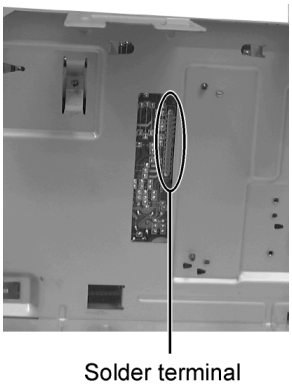

· **Disassembly of CD Mecha Unit**

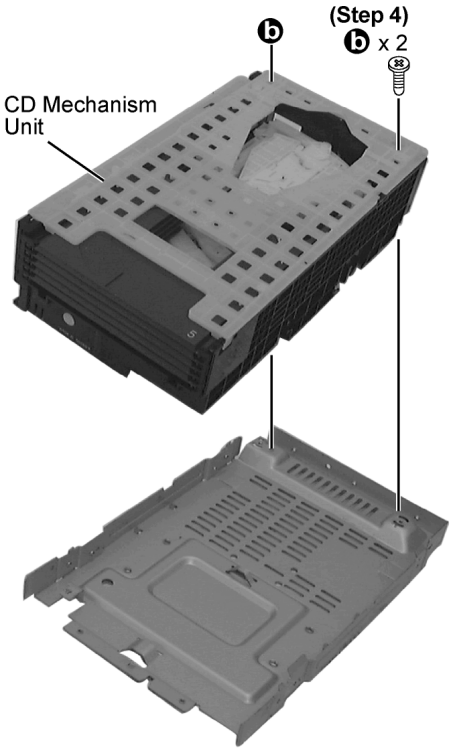

Step 4 Remove 2 screws.

Step 5 Lift up CD Mechanism unit.

11.13. Procedure for Replacing Cassette Holder

- Follow the (Step 1) - (Step 4) of Item 11.2
- Follow the (Step 1) - (Step 3) of Item 11.3

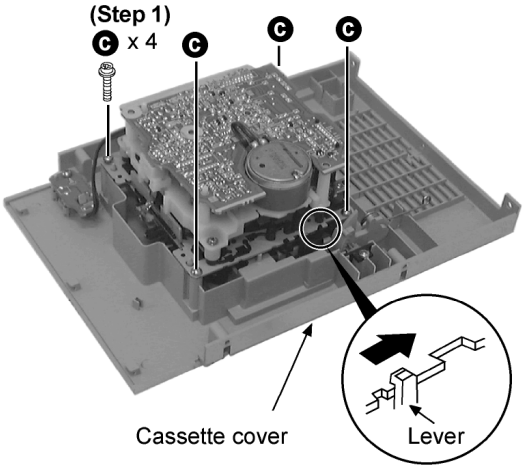

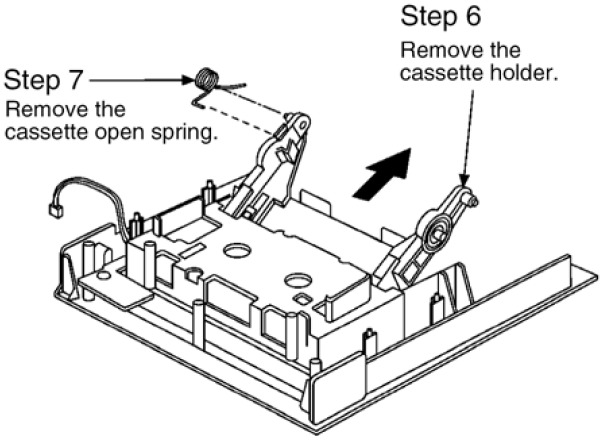

Step 2 Press the lever to open the cassette cover.

Step 3 Remove the cassette mechanism unit.

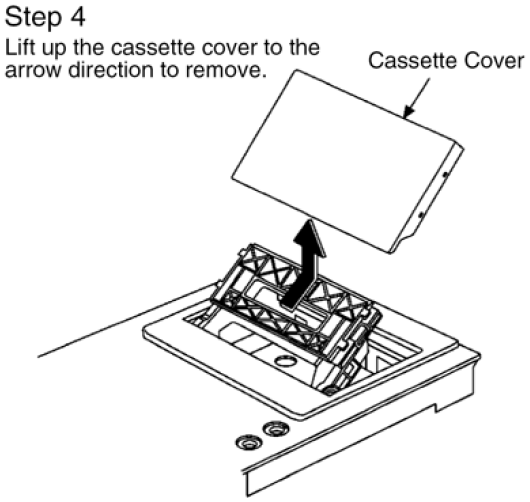

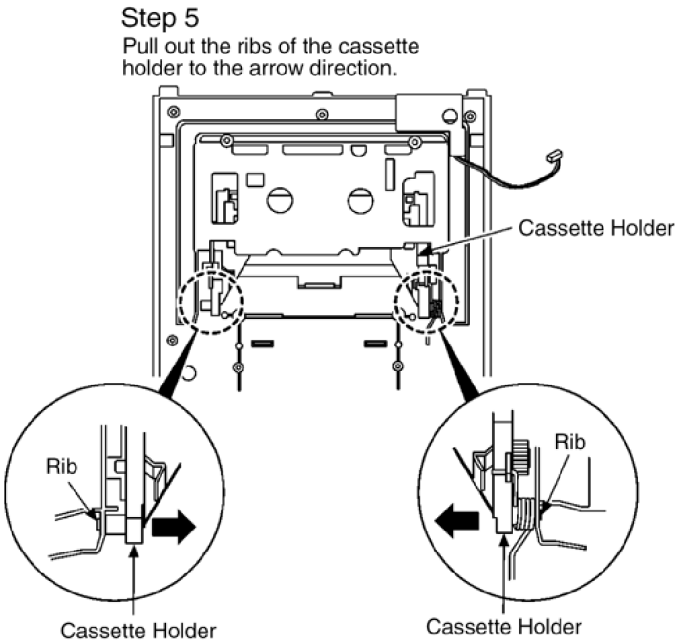

11.14. Procedure for Replacing Pinch Roller and Head Block (Cassette Mechanism Unit)

・Follow the (Step 1) - (Step 7) of Item 11.13

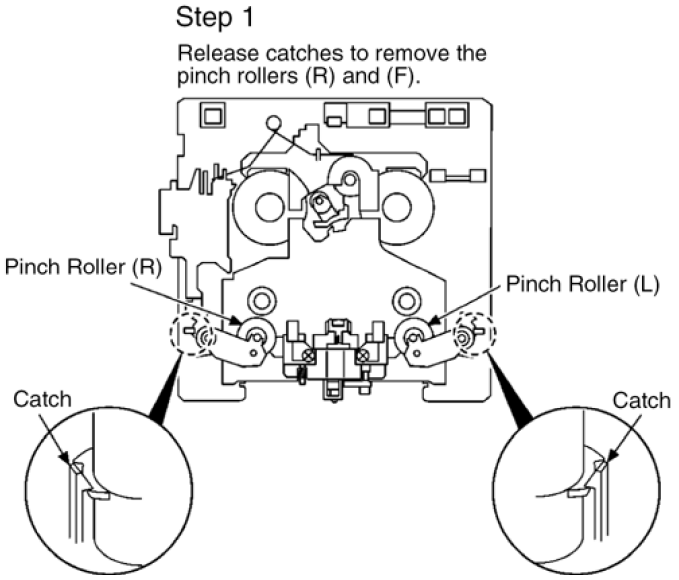

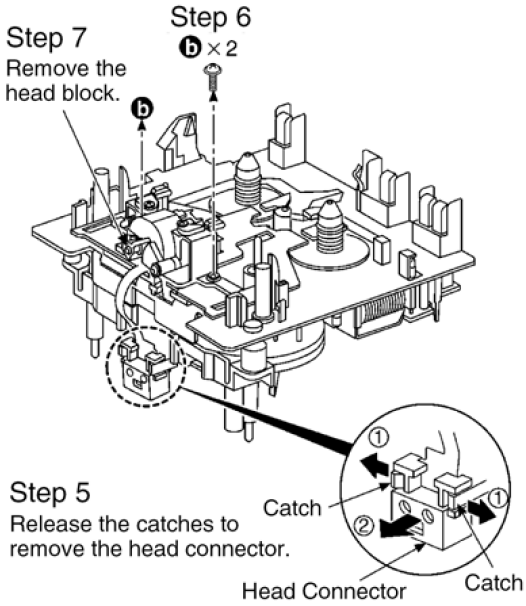

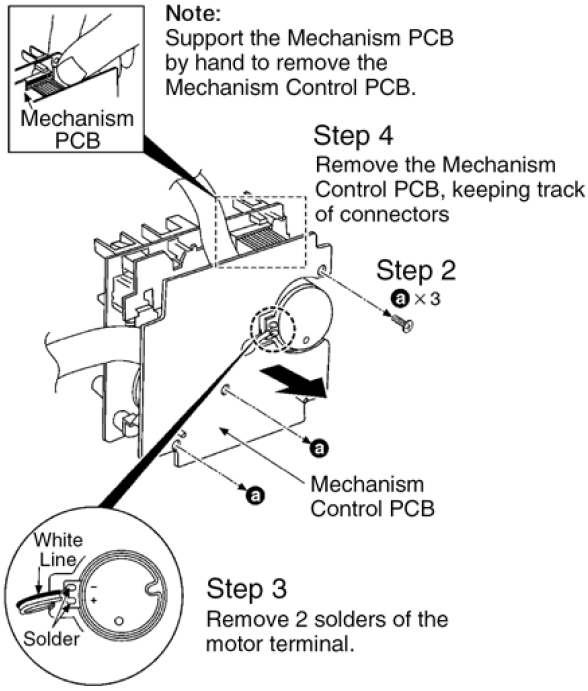

11.15. Procedure for Replacing Motor, Capstan Belt A, Capstan Belt B, and Winding Belt (Cassette Mechanism Unit)

- Follow the (Step 1) - (Step 7) of Item 11.13
- Follow the (Step 1) - (Step 7) of Item 11.14

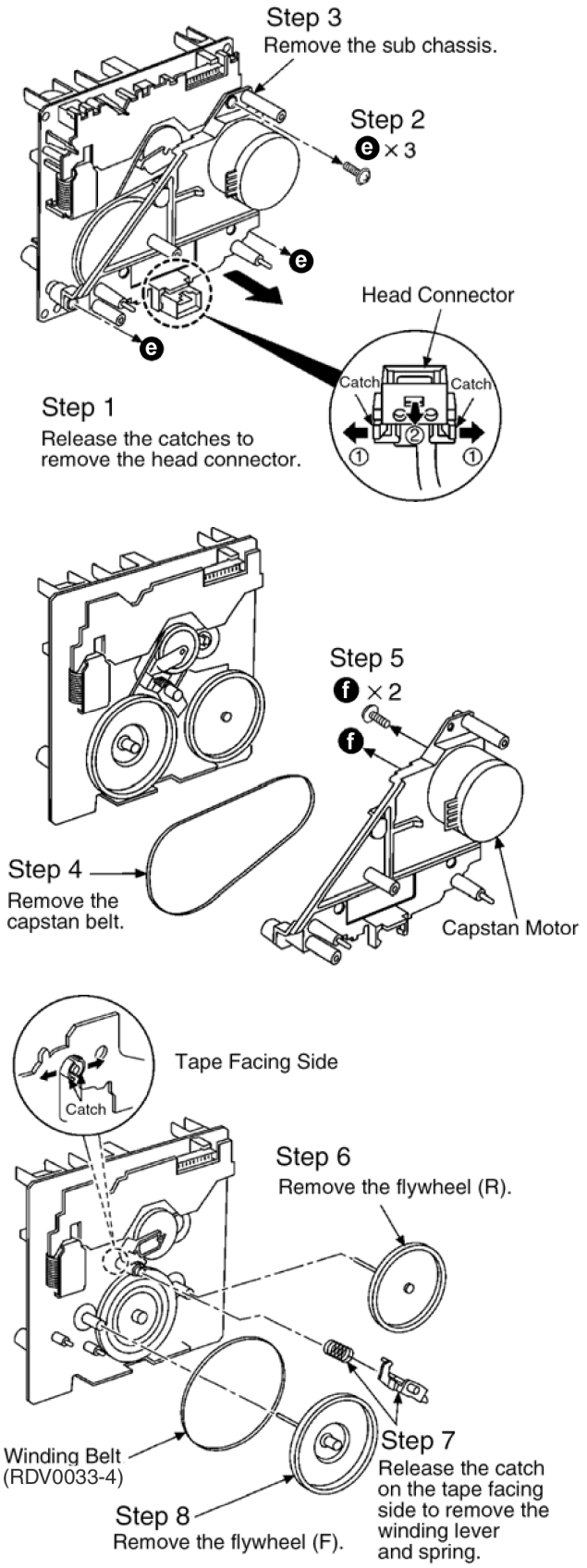

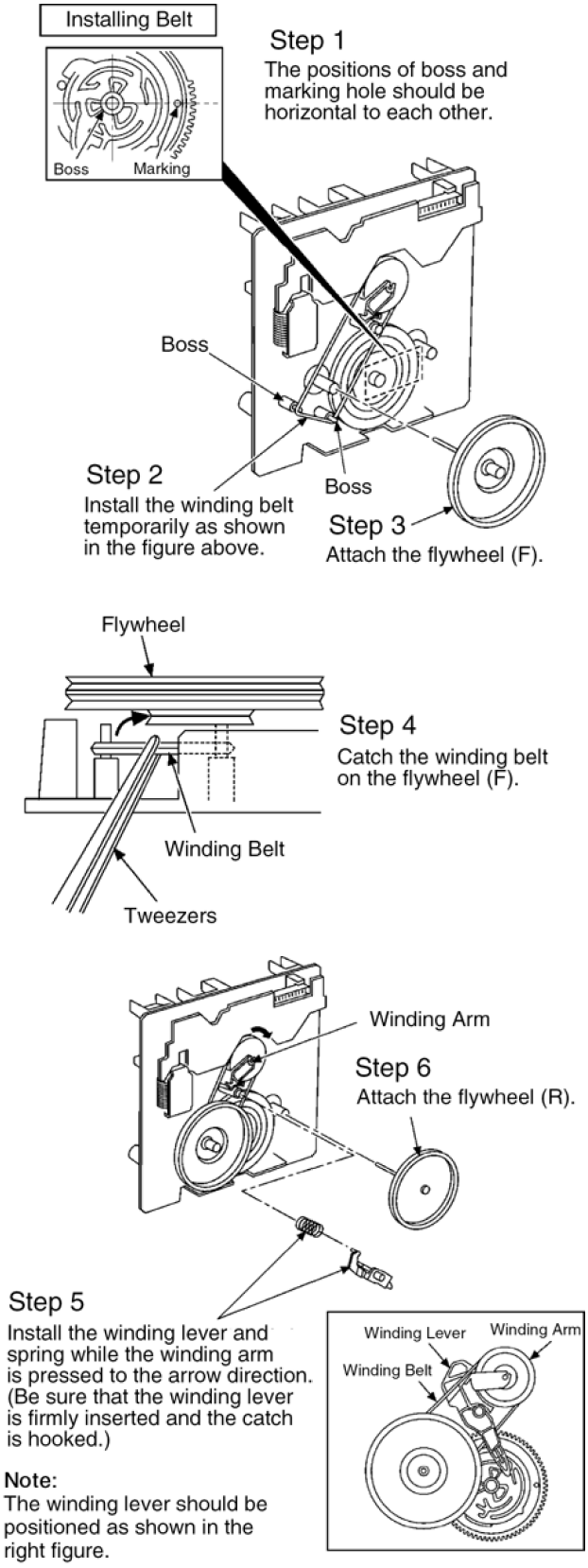

Step 7
Install the capstan belt temporarily as shown in the figure below.

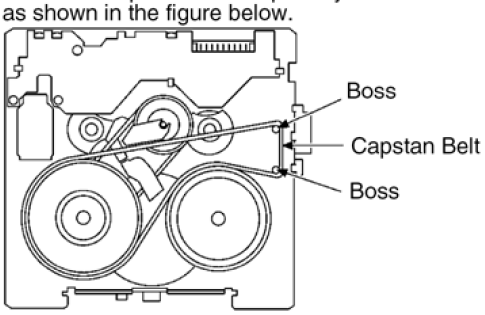

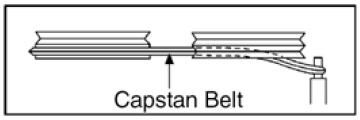

Side View

Note:
Keep the belt away from grease.

Step 9
ⓐ × 3

Step 8
Attach the sub chassis to the cassette mechanism.

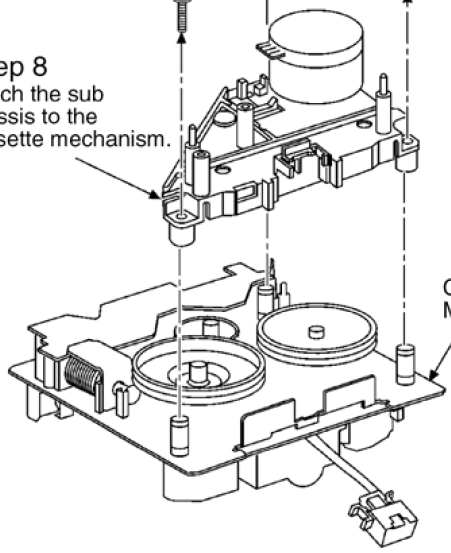

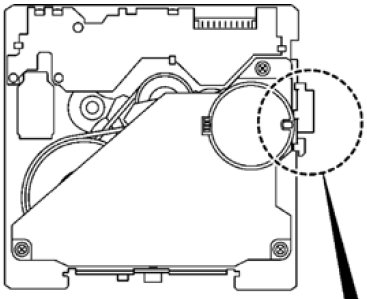

Step 10
Catch the capstan belt to the pulley of the capstan motor.

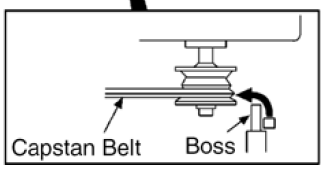

11.16. Procedure for Replacing Parts on Mechanism PCB

- Follow the (Step 1) - (Step 3) of Item 11.2
- Follow the (Step 1) - (Step 3) of Item 11.3
- Follow the (Step 1) - (Step 7) of Item 11.13
- Follow the (Step 1) - (Step 7) of Item 11.14
- Follow the (Step 1) - (Step 10) of Item 11.15

Step 1
ⓐ

Step 3
Remove 3 catches to remove the Mechanism PCB.

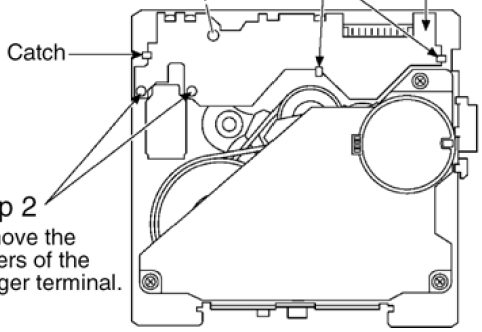

Step 2
Remove the solders of the plunger terminal.

11.17. Procedure for removing CD loading mechanism

1. Turn off by pressing power SW in the body.
2. Unplug AC power cord after the indication of [GOOD-BYE], then disassemble the body.
3. Disassemble the body, and take out CD loading mechanism.
4. Perform disassembly according to the following procedure for disassembly.

11.18. CR16 mechanism disassembly procedure

11.18.1. Gear for servicing information

- This unit has a gear which used for checking items (open/close of disc tray, up/down operation of traverse unit by manually) when servicing. (For gear information, that is described on the items for disassembly procedures.)
- For preparation of gear (for servicing), perform the procedures as follows.
- In case of re-servicing the same set, the “gear for servicing” may be took off because it had been used. So, the “gear for servicing” must be stored.

1. Remove the gear attached to top cover of CD loading mechanism.

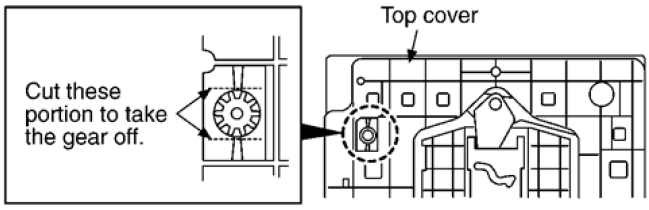

2. Insert the hexagonal wrench (2.5mm) into the gear.

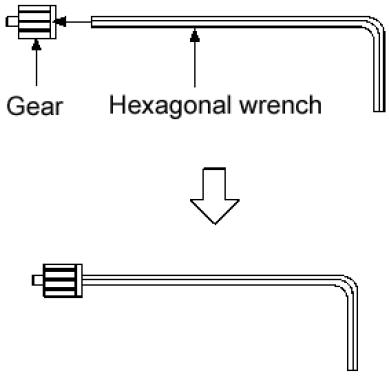

(Preparation of gear as jig is completed)

11.18.2. Replacement for the disc tray

(Step 1)
Rotate the gear for servicing and move the select rack to advanced corner.

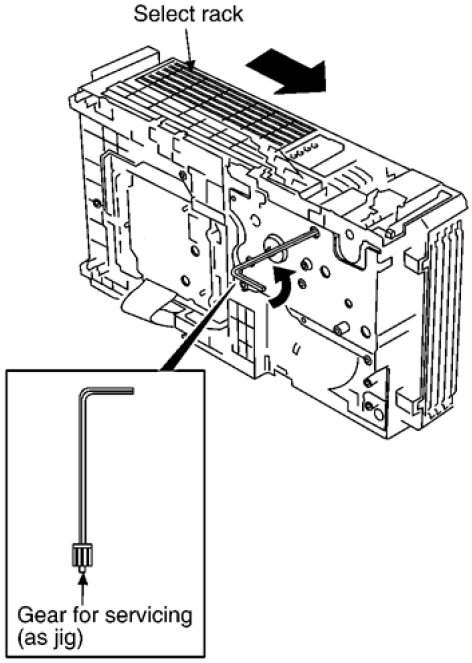

(Step 2)
Fit the mechanism unit base to select rack.

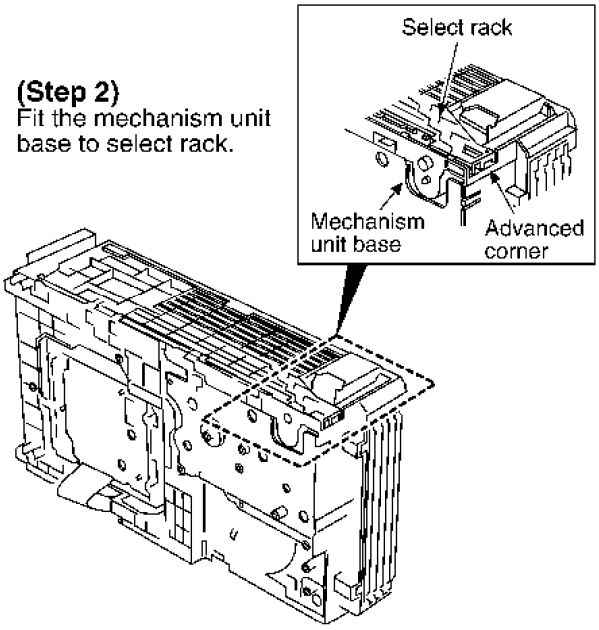

(Step 3)
Release the 2 claws, and then remove the top cover.

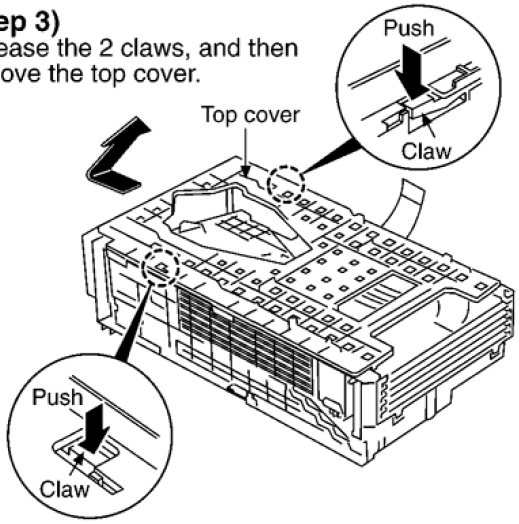

(Step 4)
Remove the open switch lever.

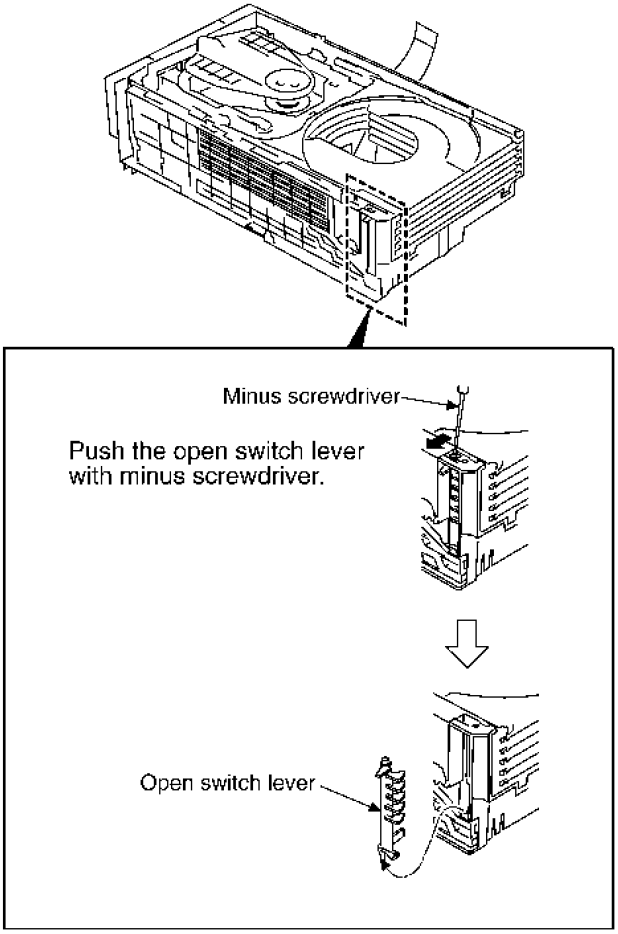

(Step 5)
Release the claw, and then remove the speed up lock.

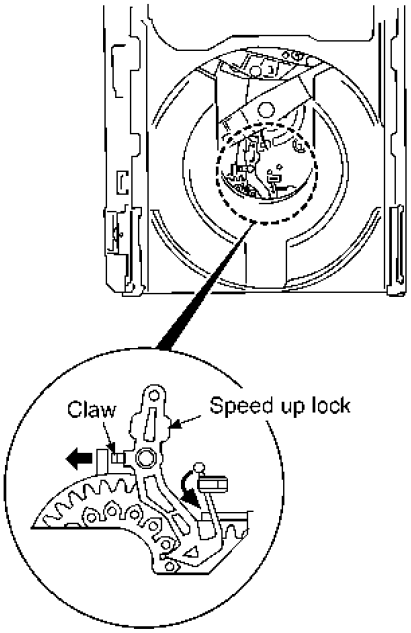

Insert the tweezers between the mechanism base and disc tray, and then lift up the disc tray.

(Step 6)
Draw out all disc tray completely.

(Step 7)
Release the both claws, and then lift up the disc tray.

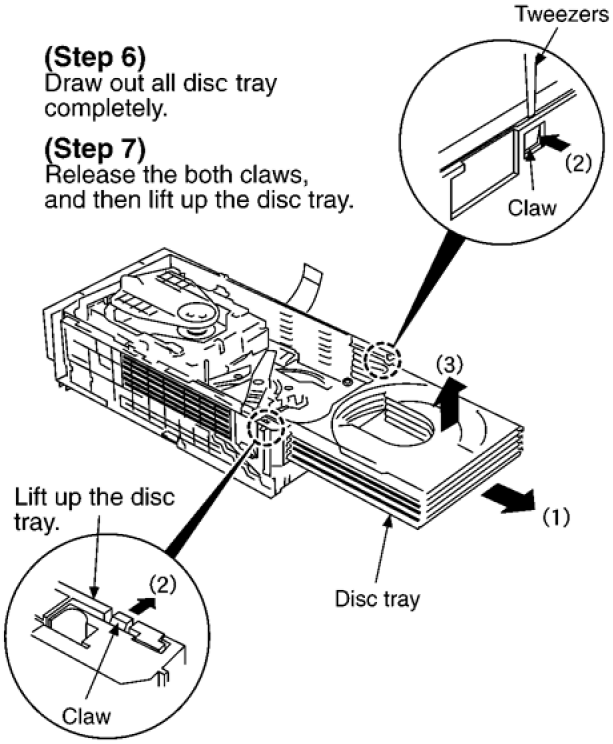

(Step 8)
Remove the 5 pieces of disc tray.

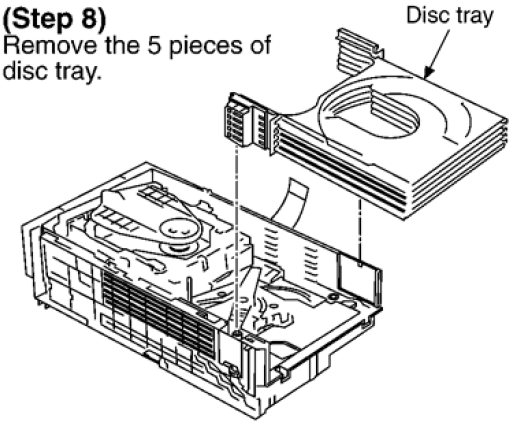

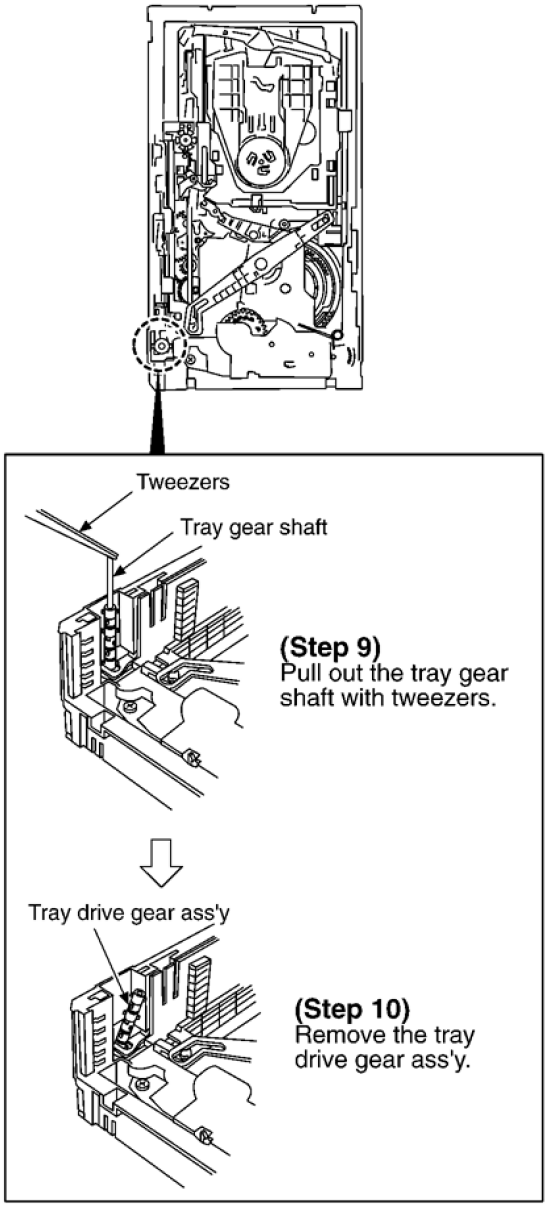

11.18.3. Replacement for the traverse deck

· Follow the **(Step 1)** - **(Step 10)** of item 11.20.2.

(Step 1)
Confirm the position for lever of UD. rack (R) to remove traverse unit.

(Step 2)
Turn the unit over. (Upside: P.C.B.)

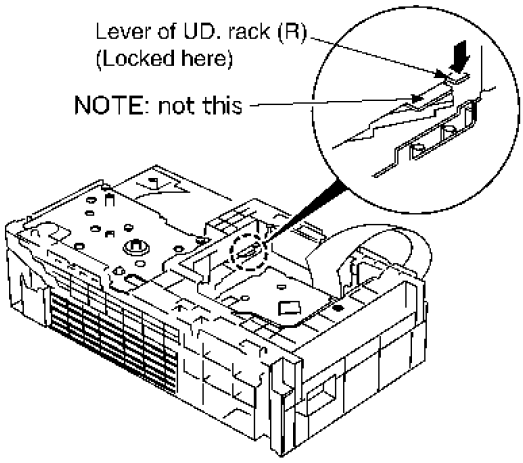

(Step 3)
Turn the unit over again, slide UD. rack (R) while pushing up the lever from the bottom.

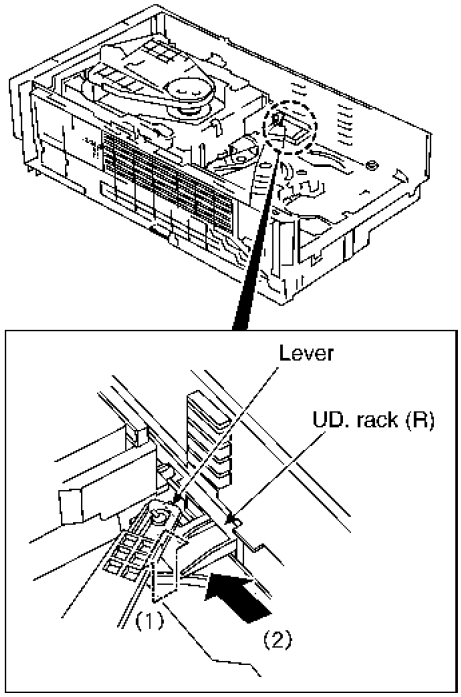

(Step 4)
Remove the traverse unit.

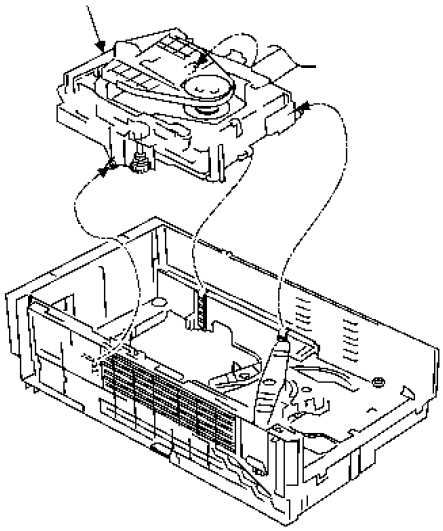

11.18.4. Disassembly for CD loading unit

- Follow the **(Step 1)** - **(Step 10)** of item 11.20.2.
- Follow the **(Step 1)** - **(Step 3)** of item 11.20.3.

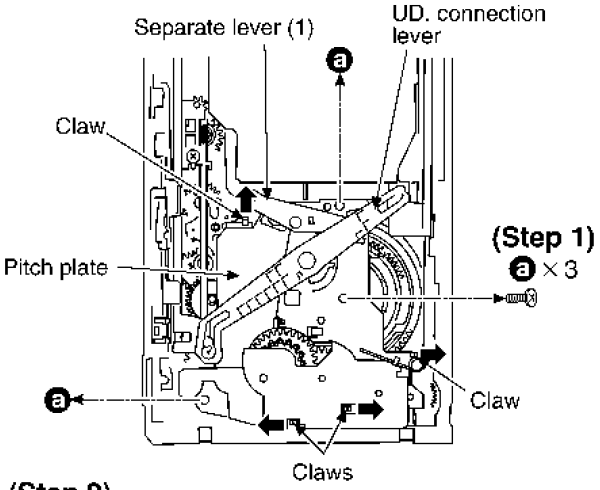

(Step 2)
Release the 4 claws, and then remove the pitch plate together with separate lever (1) and UD. connection lever.

(Step 3)
Remove the speed up gear and hor belt.

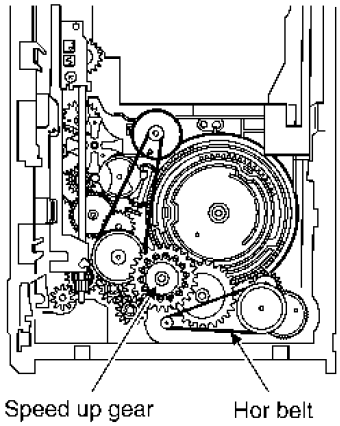

(Step 4)
Remove the reverse gear, hor pulley gear, hor speed down gear (1), hor speed down gear (2) and hor drive gear.

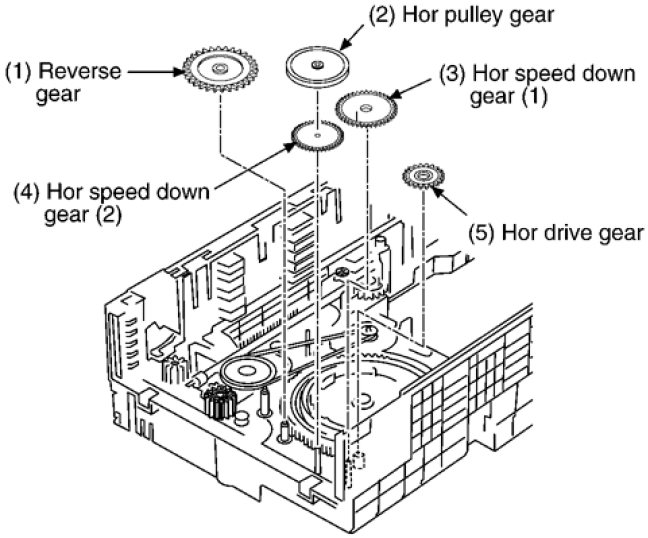

(Step 5)
Remove the UD. belt and tray relay gear.

(Step 6)
Pull out the UD. pulley gear, loosen 2 hooks of the bottom of mechanism base.

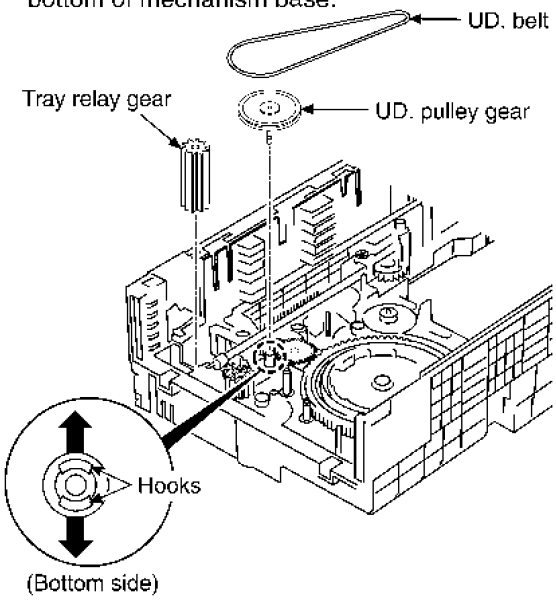

(Step 7)
Remove the 2 hor relay gears and UD. speed down gear No.2.

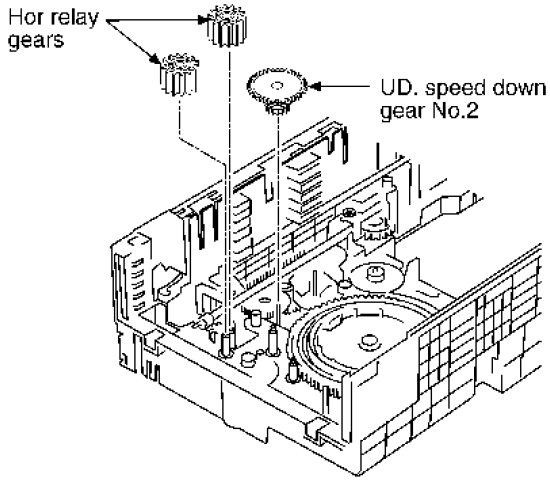

(Step 8)
Remove the main gear and main gear spring.

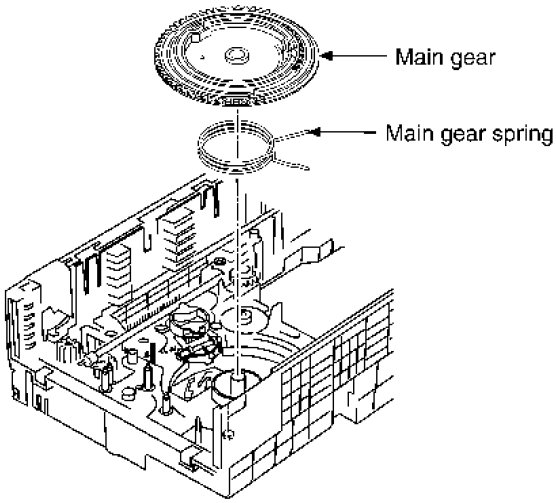

(Step 9)
Remove the change gear.

(Step 10)
Raise the change lever upright, and pull it out of hook.

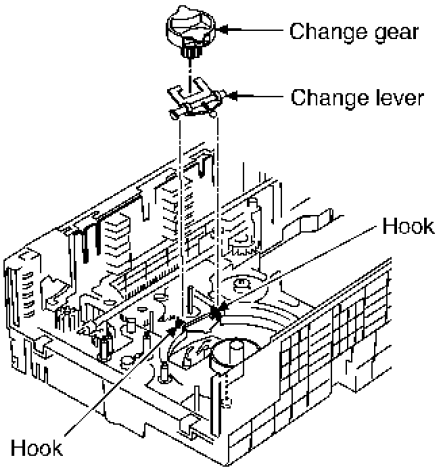

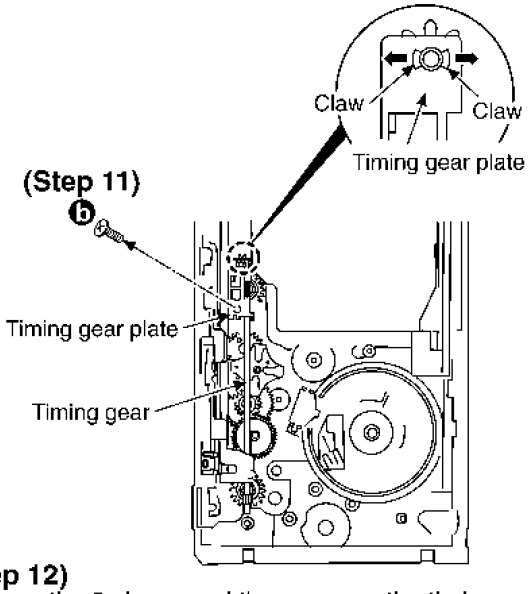

(Step 12)
Release the 2 claws, and then remove the timing gear and timing gear plate.

(Step 13)
Move the UD. rack (L) to backward, and then remove it.

(Step 14)
Remove the UD. rack (R).

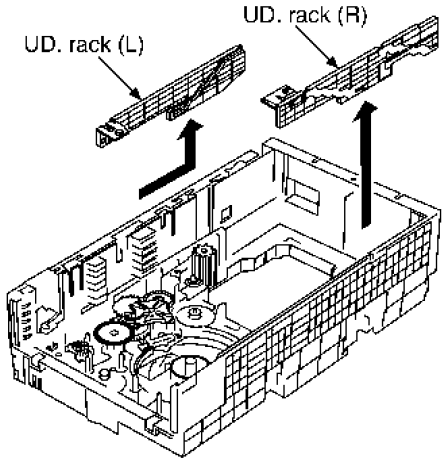

(Step 15)
Remove the 2 gears and load relay gear.

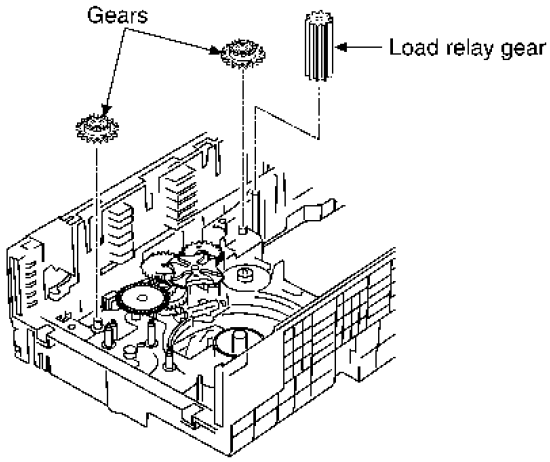

(Step 16)
Pull out the GENEVA gear, loosen 2 hooks of the bottom of mechanism base.

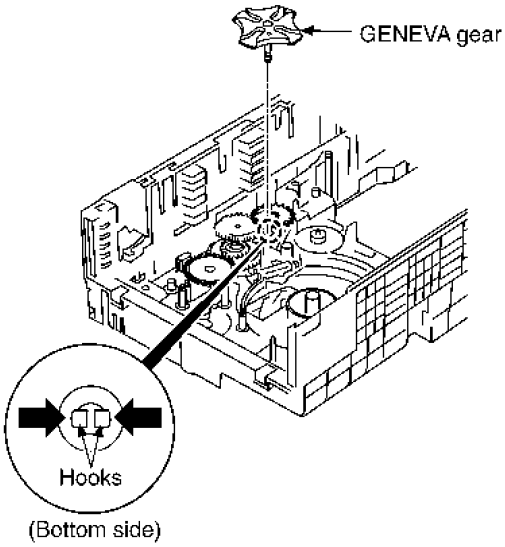

(Step 17)
Remove the UD. speed down gear No.1 and UD drive gear.

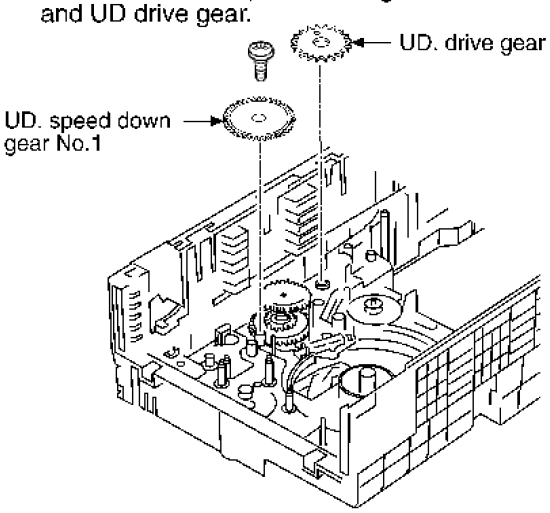

(Step 18)
Slide the select rack to the edge direction of the arrow (1). Push the claw and pull out to arrow (2) while sliding the select rack to the arrow (1).

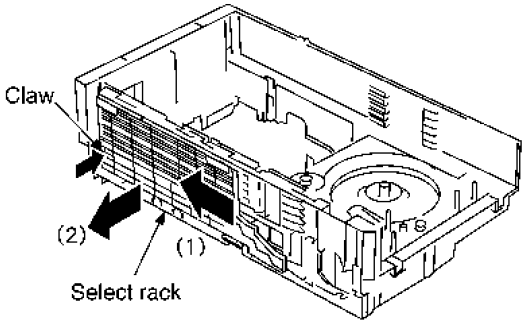

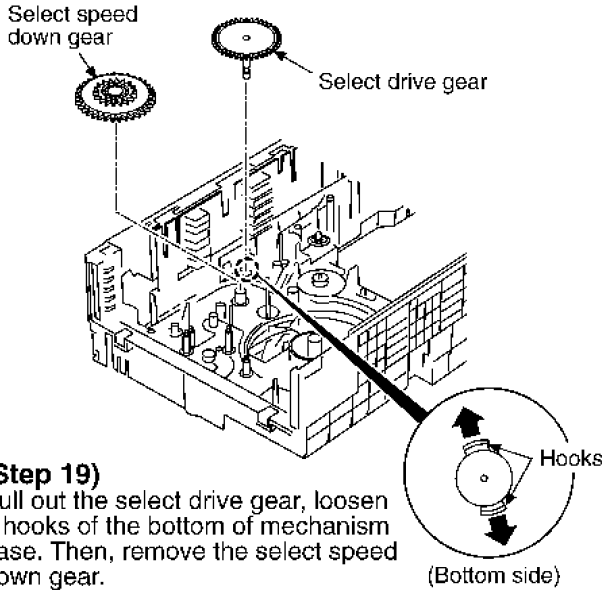

(Step 19)
Pull out the select drive gear, loosen 2 hooks of the bottom of mechanism base. Then, remove the select speed down gear.

(Step 20)
Remove the select guide after sliding upside.

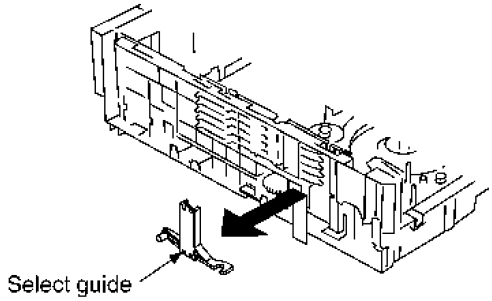

(Step 21)
Remove the hook of the tray stopper with a minus screwdriver.

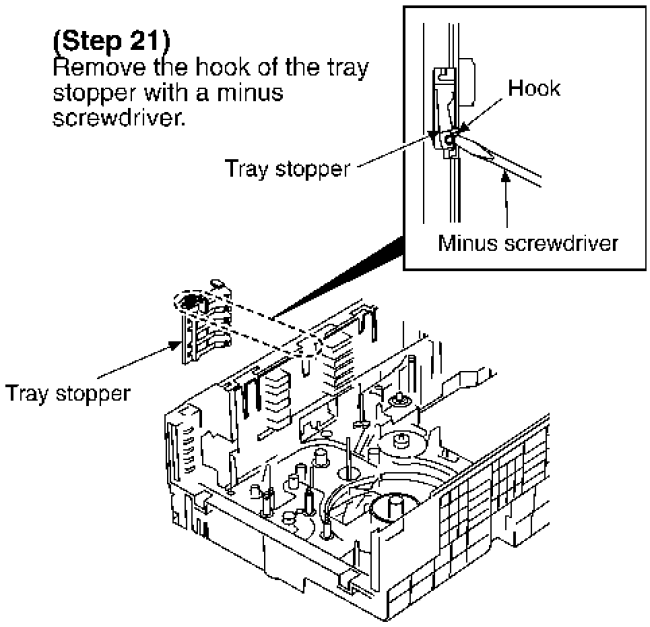

(Step 22)
Remove the bottom of the tray lock lever with a minus screwdriver and others.

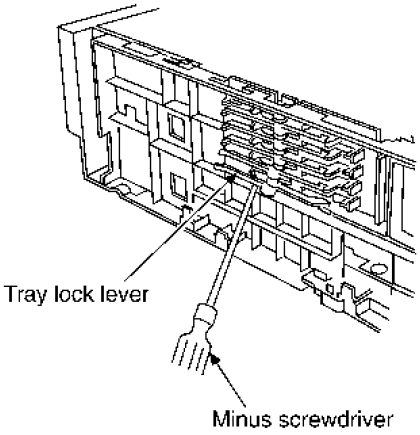

11.19. Replacement for traverse deck

・Follow the (Step 1) - (Step 3) of Item 11.12.

Step 1 Move ribs at both sides to the arrow direction (The verticval rack (R) slides and the groove opens).

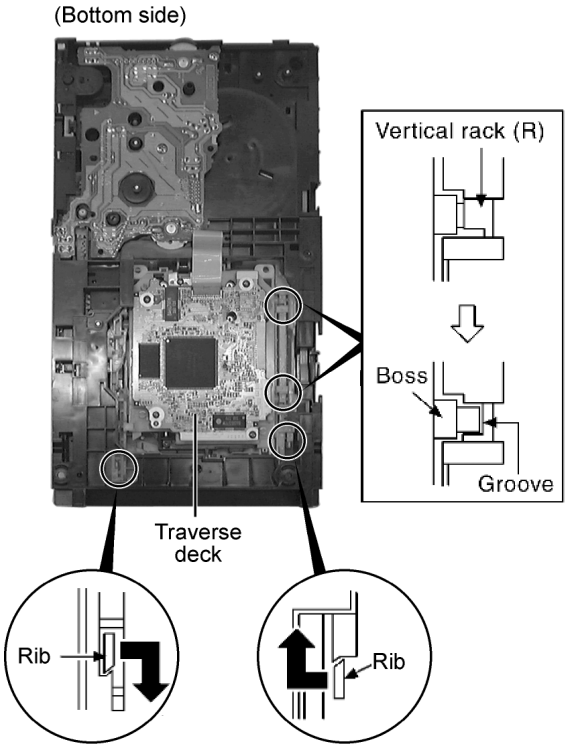

Step 2 Remove CD traverse deck rotating to the arrow direction.

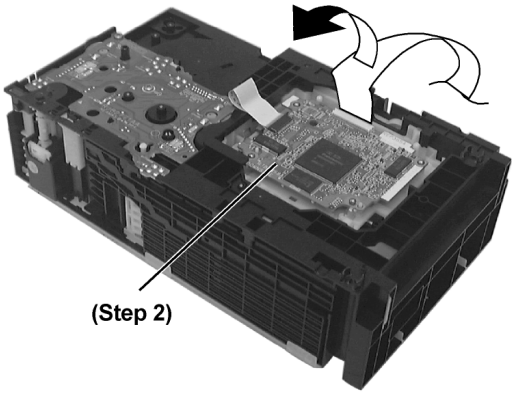

11.20. Replacement for optical pickup unit (CD mechanism)

- Follow the (Step 1) - (Step 4) of Item 11.2
- Follow the (Step 1) - (Step 3) of Item 11.3
- Follow the (Step 1) - (Step 7) of Item 11.5
- Follow the (Step 1) - (Step 3) of Item 11.7
- Follow the (Step 1) - (Step 2) of Item 11.20

Step 1 Pull out FFC.

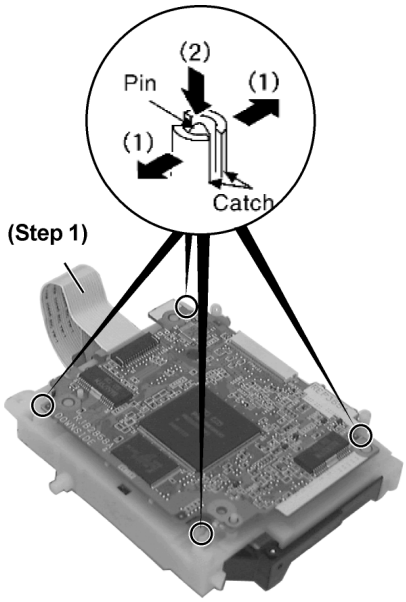

Step 2 Widening the catch, push the pin in.

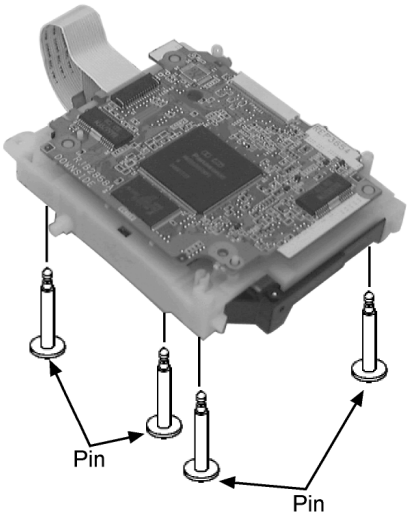

Step 3 Remove 4 pins.

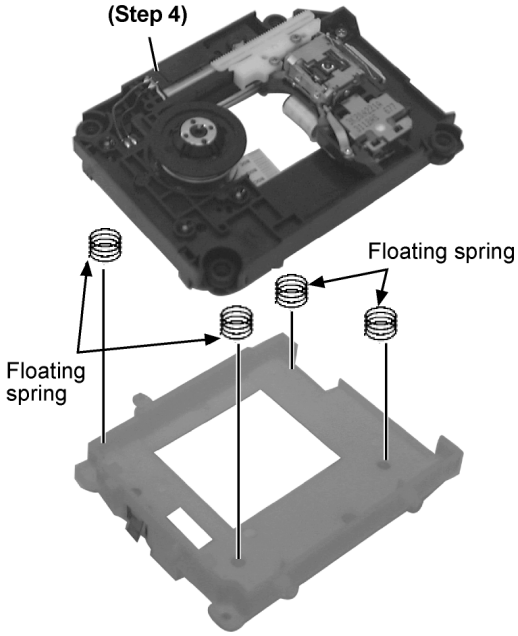

Step 4 Remove the traverse deck.

Note: As floating springs (4 pieces) come off at the same time, be careful not to lose them.

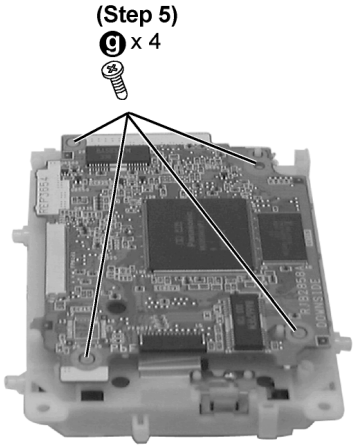

Step 6 Remove the dvd module board and turn it over.

Step 7 Pull FFC out from the connector.

Note: Insert a short pin into FFC of the optical pickup. [See “Notice on handling of the optical pickup”].

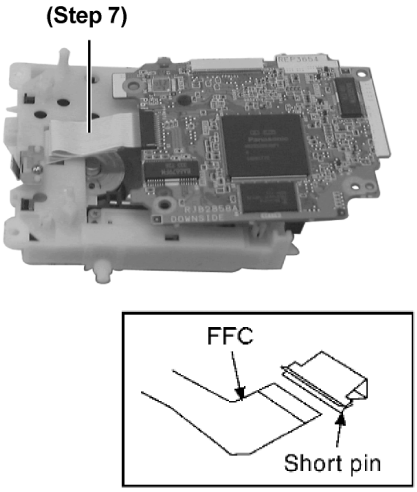

Step 8 Rotate the traverse deck (B) to the arrow direction and shift the optical pickup to the furthest backward.

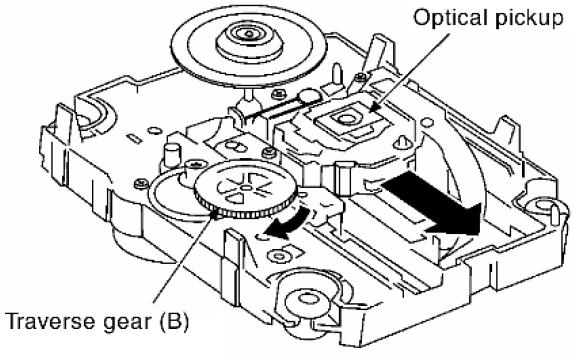

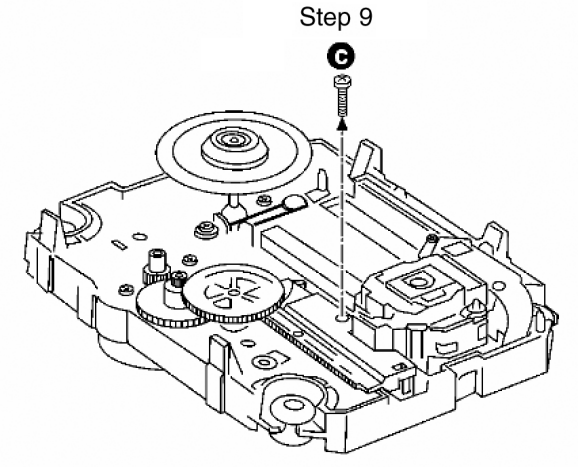

Step 10 Remove the catch of the drive rack, and take out the drive rack.

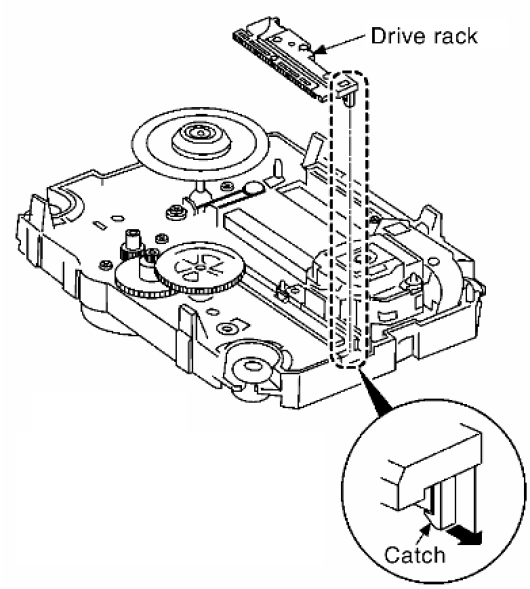

Step 11 Place the convex part of an optical pickup to the concave part of a traverse base, then take out the optical pickup.

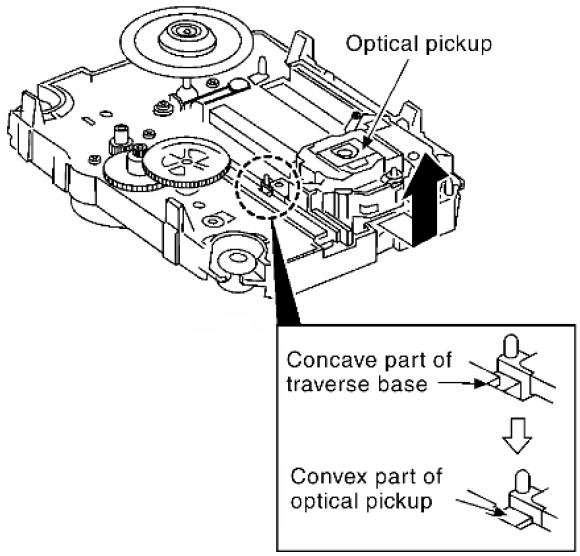

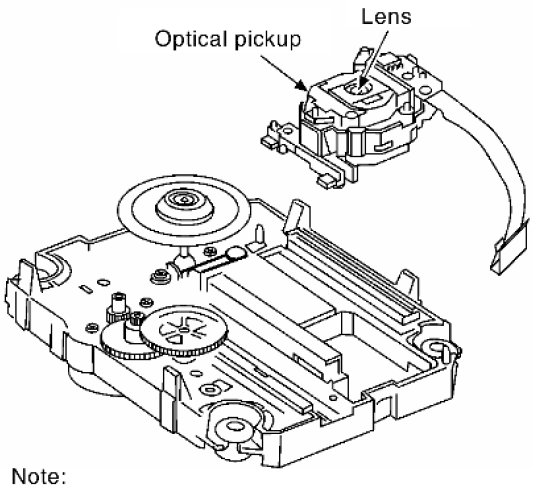

Note:
Do not touch the lens of the optical pickup

11.21. CR16 MECHANISM ASSEMBLY PROCEDURE

The following specified greases and/or oil must be applied when some specific parts are changed.

1. Floil grease (VFK1298) : The floil grease must be applied to tray, tray (L) and tray (R).
2. Hanarl oil (VFK1700) : The hanarl oil must be applied to any parts with grease other than the said parts.

(Step 1)
Install the tray lock lever to mechanism base.

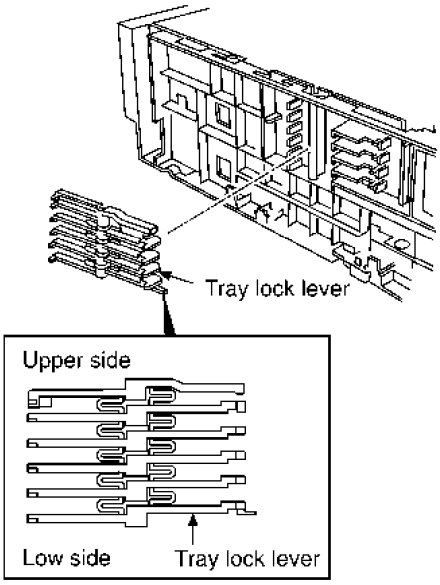

(Step 2)
Push the tray lock lever with a hand and install it.

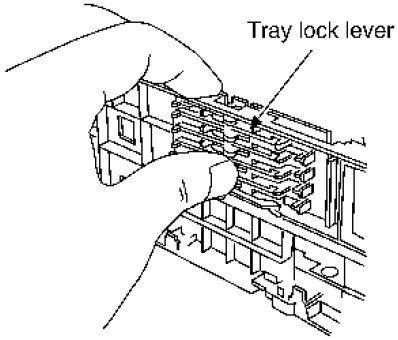

(Step 3)
Install the tray stopper to mechanism base.

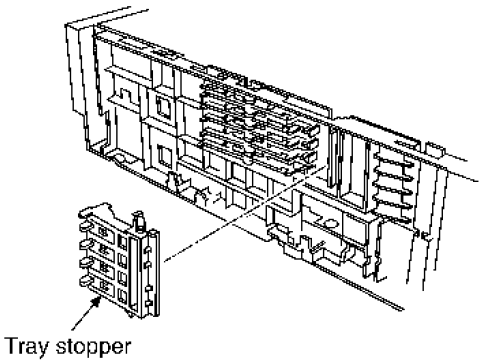

(Step 4)
Push the tray stopper with a hand and install it.

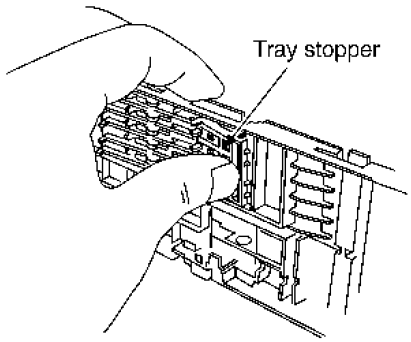

(Step 5)
Insert the select guide with a groove of the mechanism base and move it below.

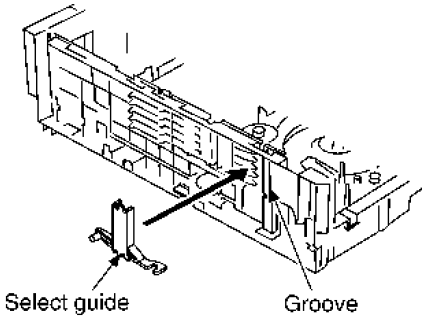

(Step 6)
Install the select speed down gear to mechanism base.

(Step 7)
Install the select drive gear to mechanism base.

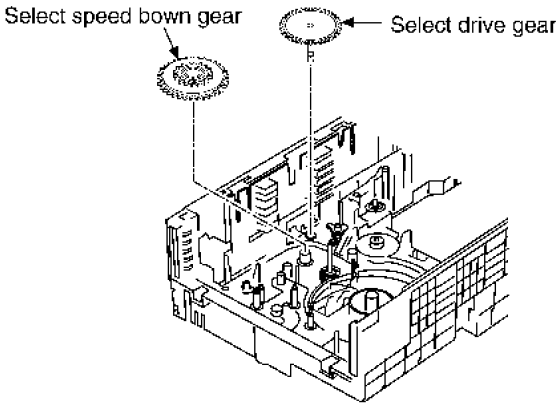

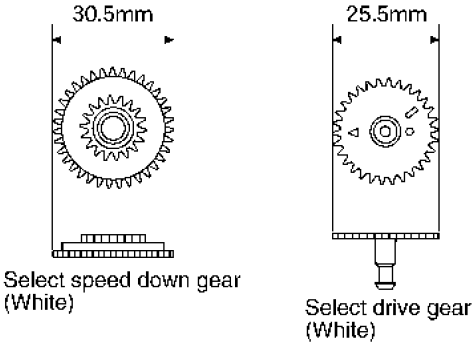

(Step 8)
Fit a mechanism base marking to the rectanguler mark of gear so that the triangle mark can indicate the sideward direction.

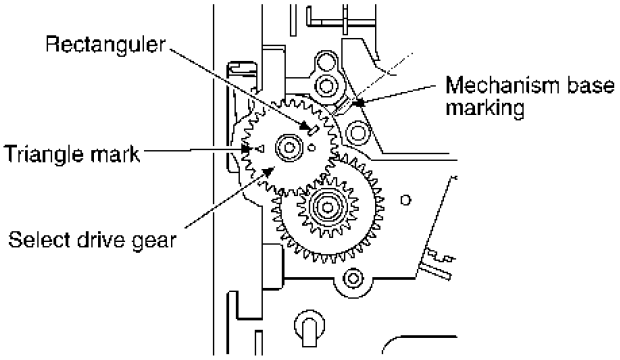

(Step 9)
Install the select rack to mechanism base.
(Checking items before the installation.
1. Check select guide is completely in lowest position.
2. Check its phase of select drive gear is correct position.(Rectangle/Triangular mark)(Refer to Step 8))

1. Put a select rack down with it fitted to its circumference of mechanism base.

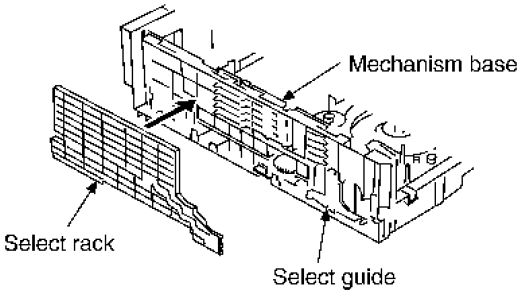

2. Slide the select rack with it's pushing to a little right direction and install it.

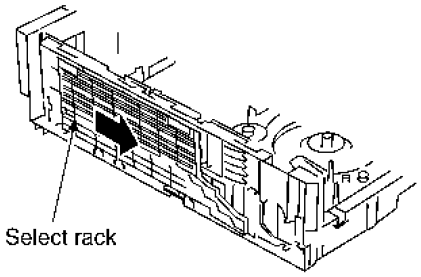

(Figure to see from the inside)

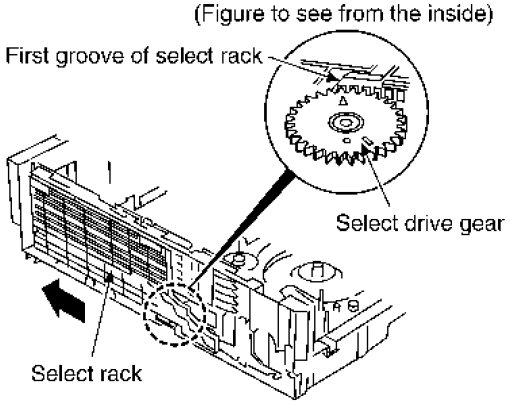

3. Check whether its end of triangular mark is in first groove of select rack, after fixing.
4. After insertion of select rack, continue the following work until the indication that it gose forward. And, all the while it must be checked that select rack is in the extreme end.

5. After insertion the select rack, the marking of select gear has a little gap when it is in the extreme end.

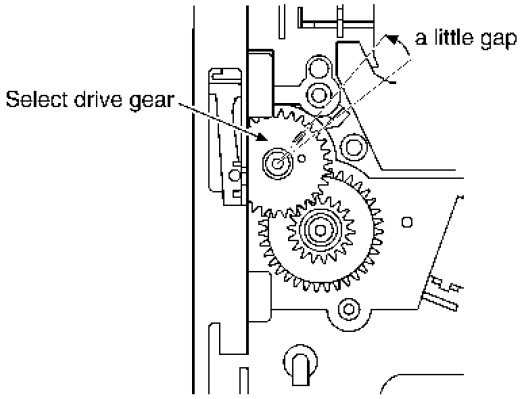

(Step 10)
Install the UD. speed down gear No.1 and UD. speed down gear No.2.

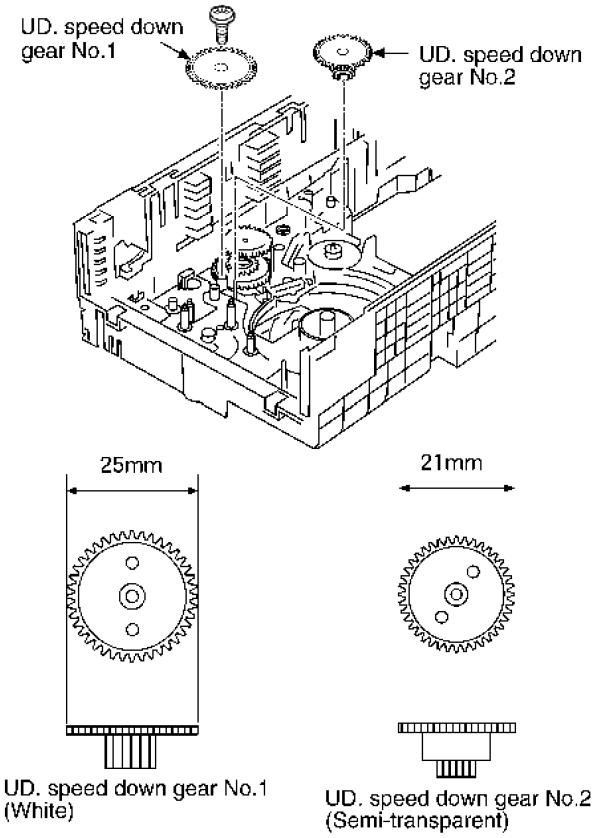

(Step 11)
Install the UD. drive gear to mechanism base.

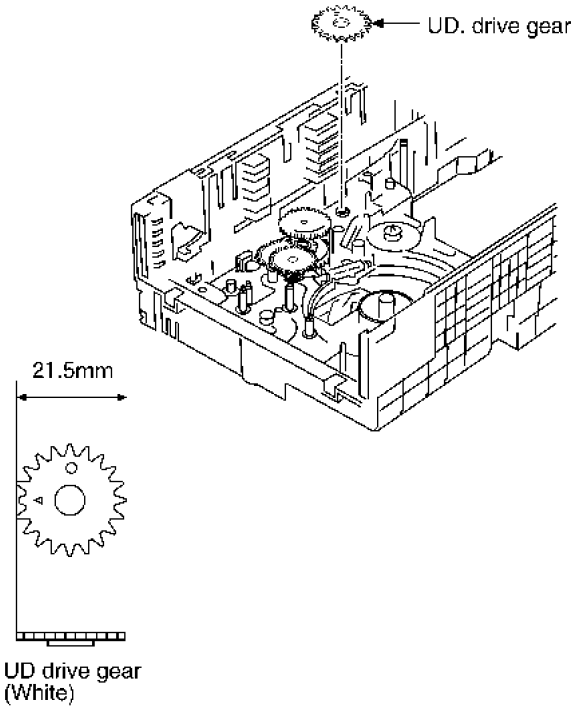

(Step 12)
Insert the UD. drive gear with its marking hole upward. At that time, its triangle mark should be sideways.

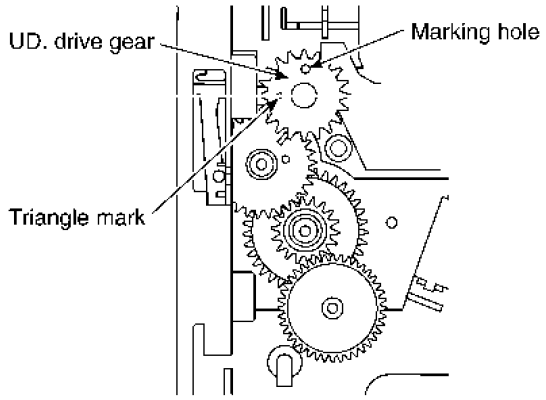

(Step 13)
Insert the GENEVA gear with its marking hole upward, and fix it by 2 hooks on bottom of mechanism base. At that time, UD. drive gear mustn't be moved.

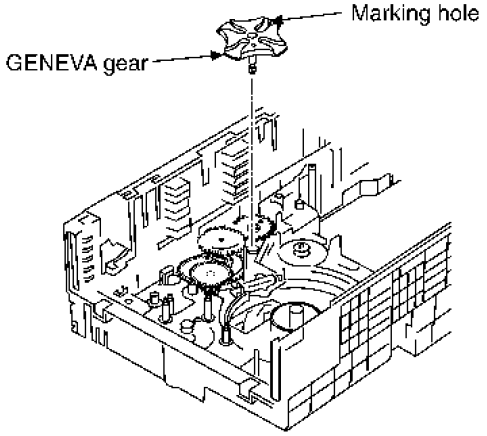

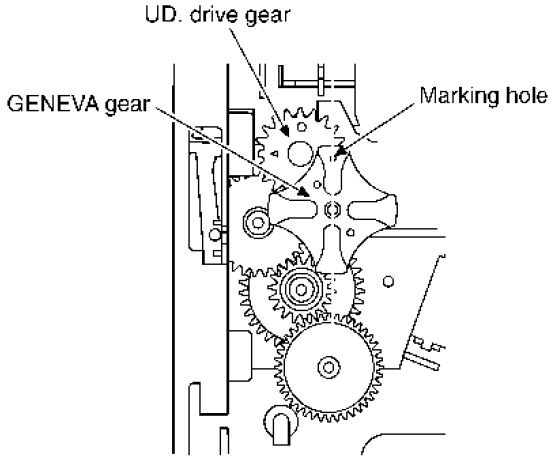

(Step 14)
Install the 2 gears to mechanism base.

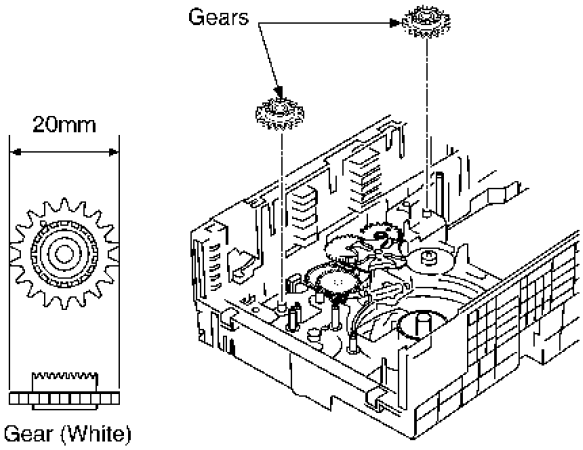

(Step 15)
Insert the UD. rack (R) to (2) from arrow (1).

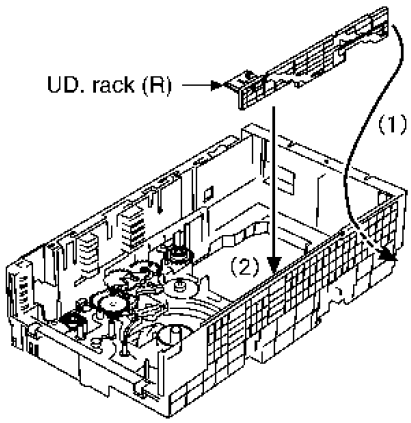

NOTE:
Put a groove of the mechanism base to the UD. rack (R).

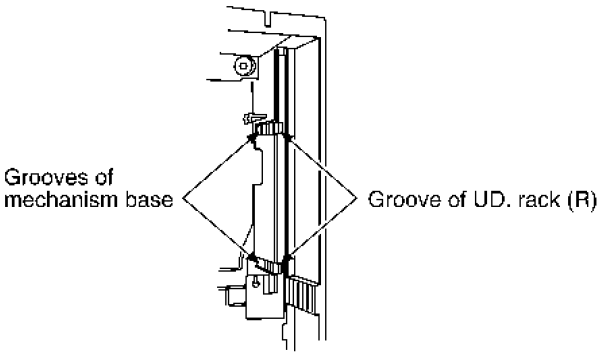

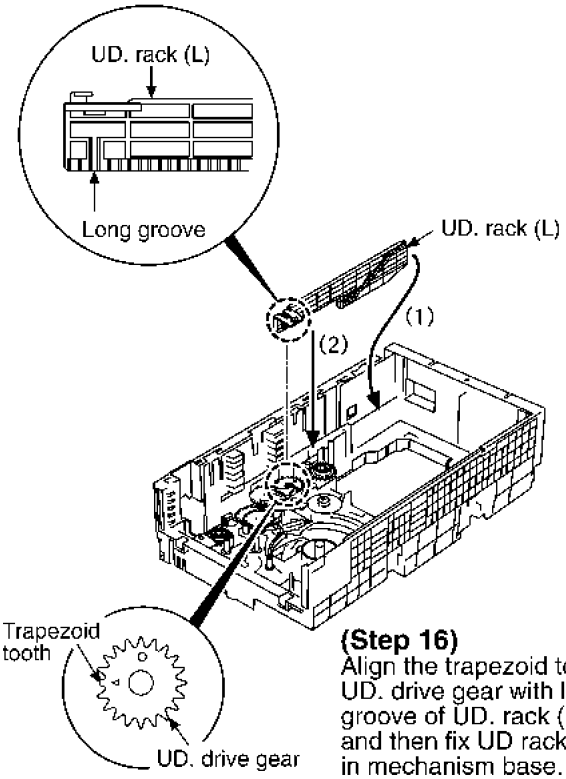

(Step 16)
Align the trapezoid tooth of UD. drive gear with long groove of UD. rack (L), and then fix UD rack (L) in mechanism base.

(Figure to see from the upper side)

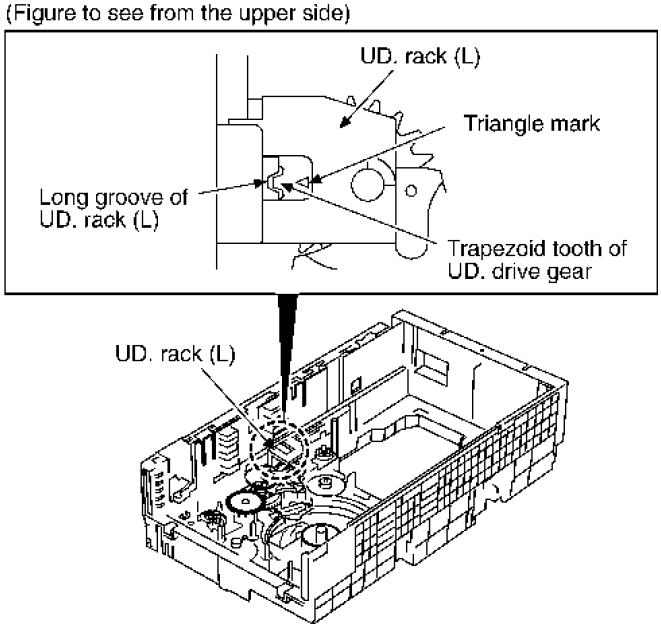

(Step 17)
Install the tray relay gear and 2 hor relay gears.

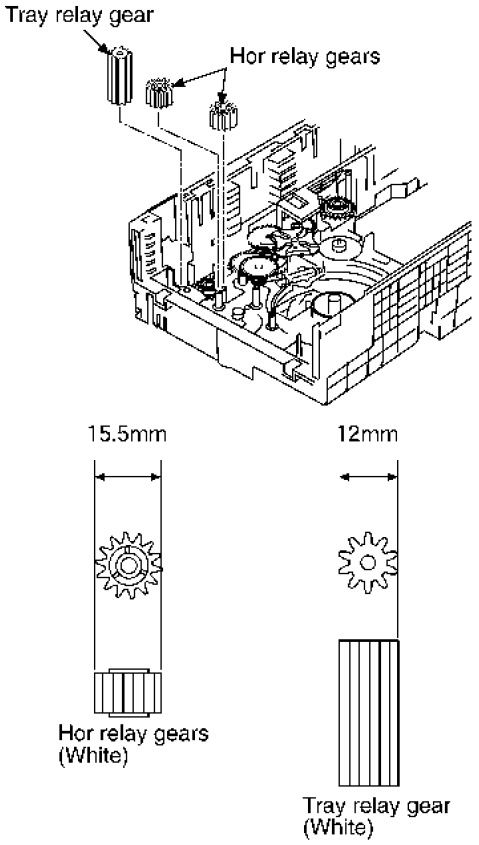

(Step 18)
Install the load relay gear to mechanism base.
(Fit load relay gear with its big hole downward.)

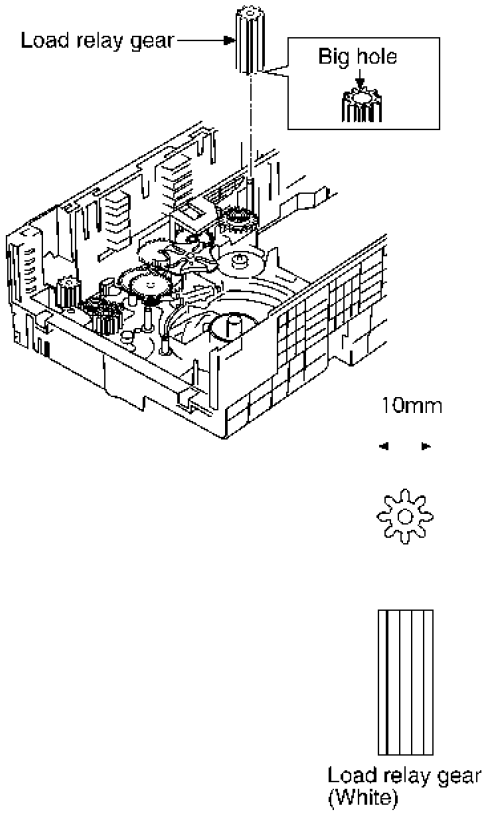

(Step 19)
Put on the top of the timing gear, then, install the timing gear and it's plate.
At that time avoid the UD. rack (L).

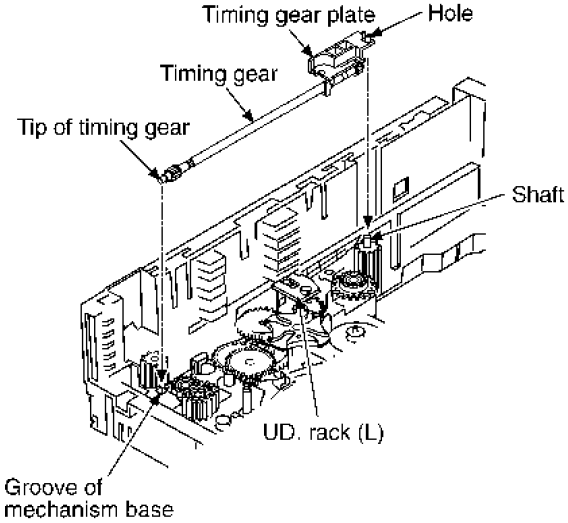

(Step 20)
Fix 2 claws and a screw to fix the timing gear and it's plate.

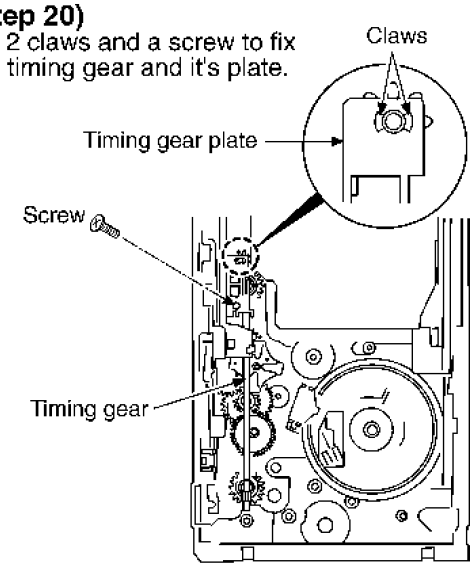

(Step 21)
Install the UD. pulley gear to mechanism base.

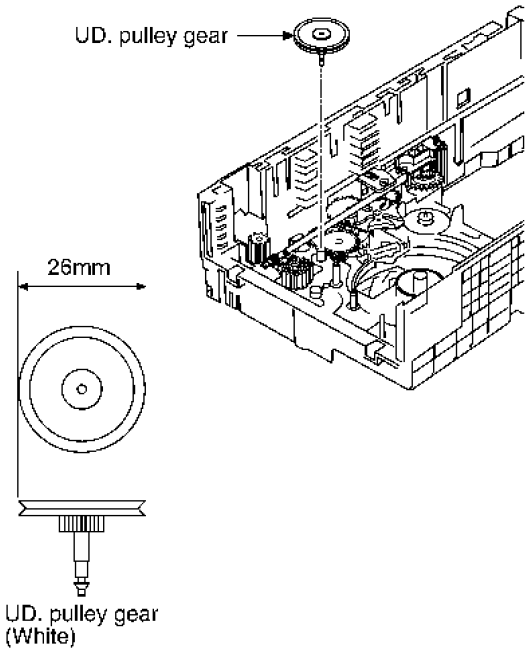

(Step 22)
Insert the change lever with it upright.

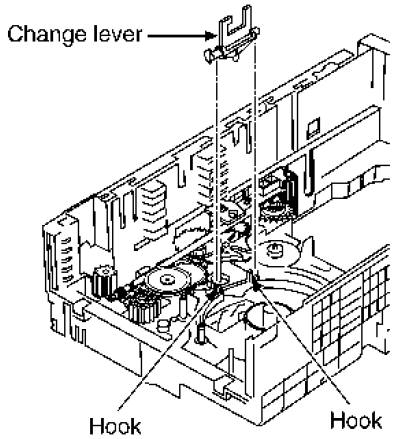

(Step 23)
Be sure the notice of bellow before fixing the change gear.
1. Select track should be in the rear of mechanism base.
2. Its hole of GENEVA gear should turn up.

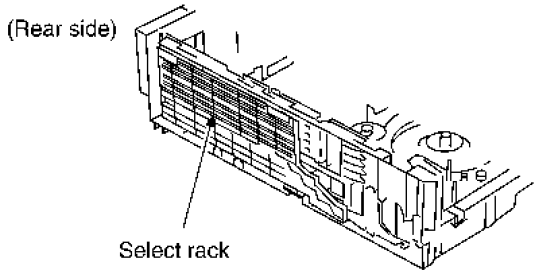

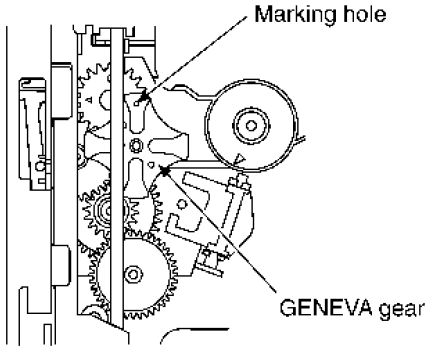

(Step 24)
Install the change gear as insert the change lever into the groove of change gear.

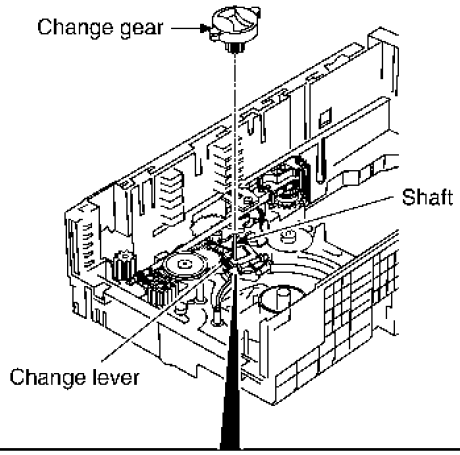

1. Pushing the ◯ part and pull up the change lever 45°.

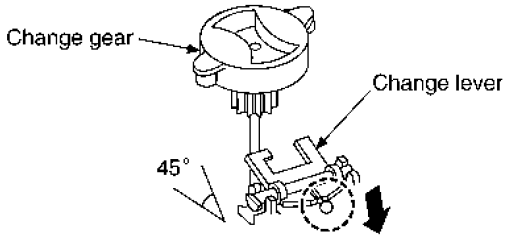

2. Insert the change lever into the groove of change gear.

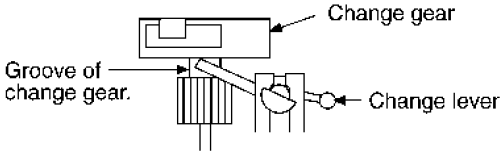

(Step 25)
Put change gear down with projection part of change gear fitted to triangle mark of mechanism base, when fixing change gear.
At that time, check change gear is inserted into the groove of change lever.

(Step 26)
Lastly, turn GENEVA gear clockwise slightly and drop change gear to mechanism base.

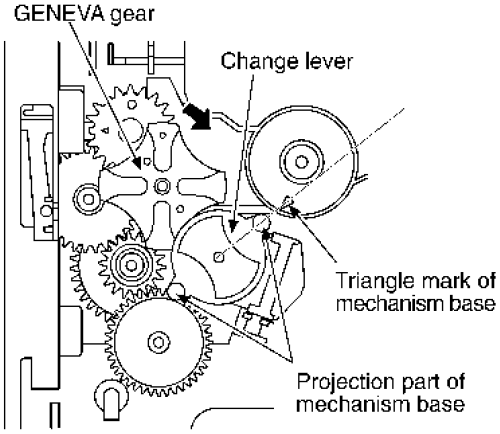

(Step 27)
Move the select rack smoothly forward manually until 2 extreme points of both select track and mechanism base.

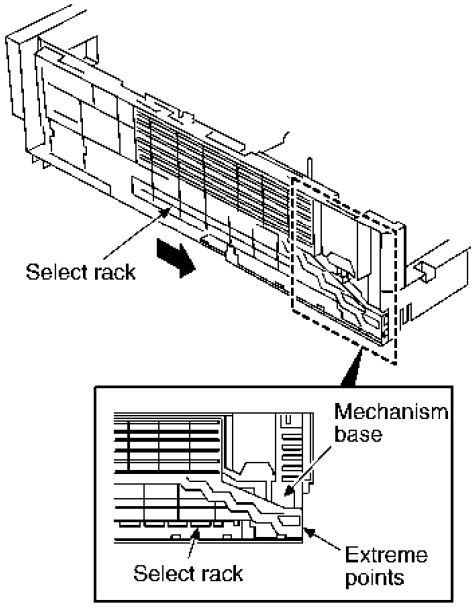

(Step 28)
Install the main gear spring and hor drive gear.

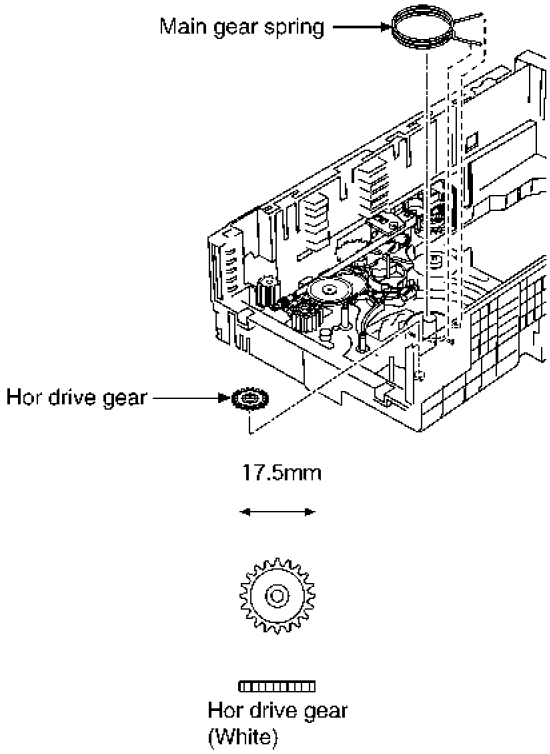

(Step 29)
Don't bring change lever into touch to projection part of main gear, when fixing main gear in mechanism base.

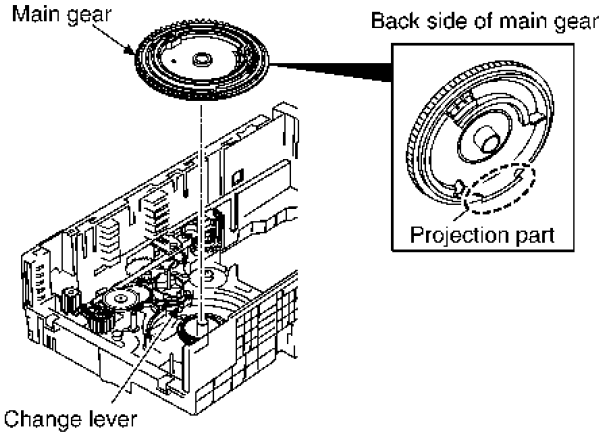

(Step 30)
After that, turn main gear so that 2 holes inside main gear would be in alignment with mechanism base.

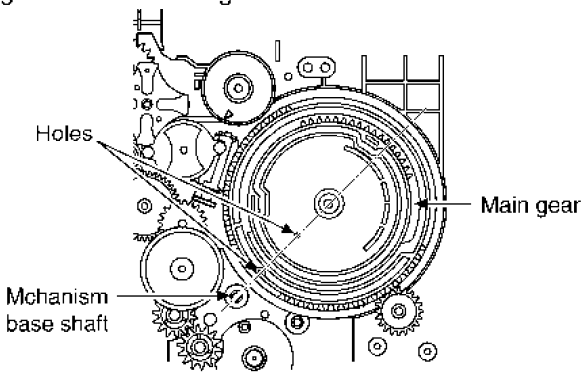

(Step 31)
Install the hor speed down gear (2), hor speed down gear (1), hor pullry gear and reverse gear.

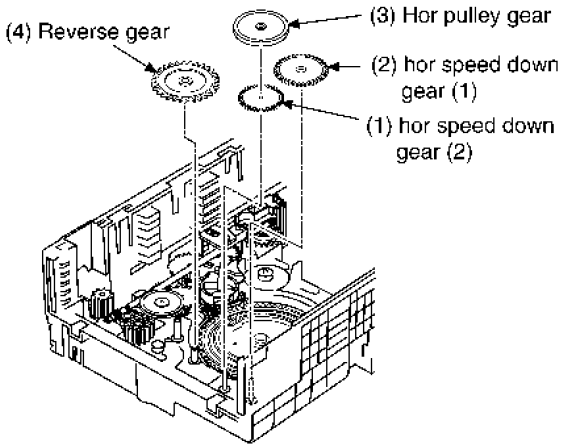

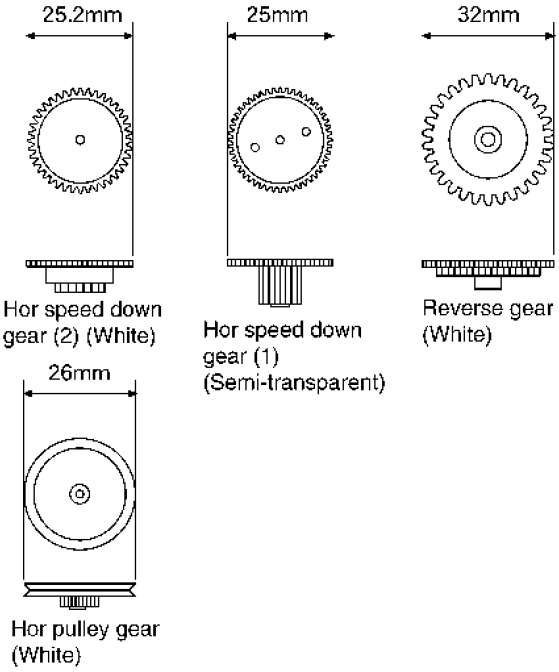

(Step 32)
Install the UD. belt and hor belt.

NOTE:
1. Take care not apply the grease to the belt.
2. Install the belt without twist.

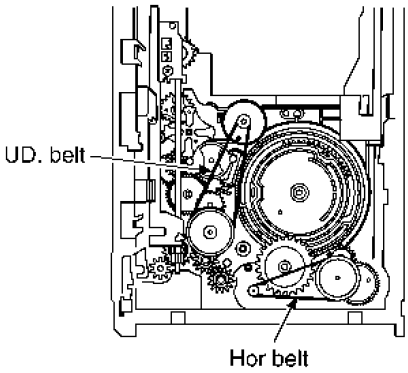

(Step 33)
Install speed up gear to its shaft of mechanism base with 2 fitting.

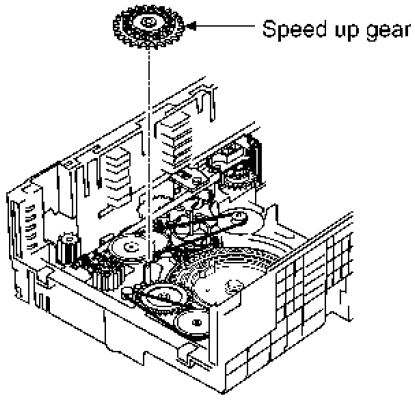

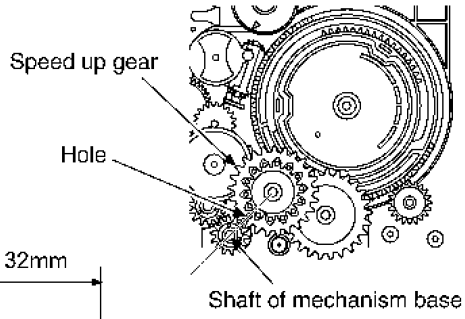

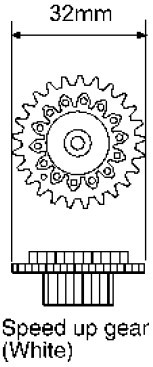

(Step 34)
Install the pitch plate. (The 4 claws should be latched.)

(Step 35)
Fix 2 ribs of UD. rack (L) and (R) into groove of both ends of UD. connection lever.

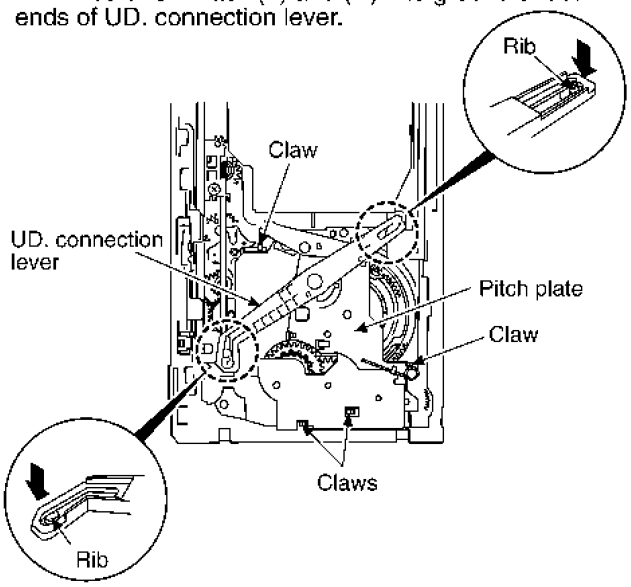

(Step 36)
Fixed it by three screws further.

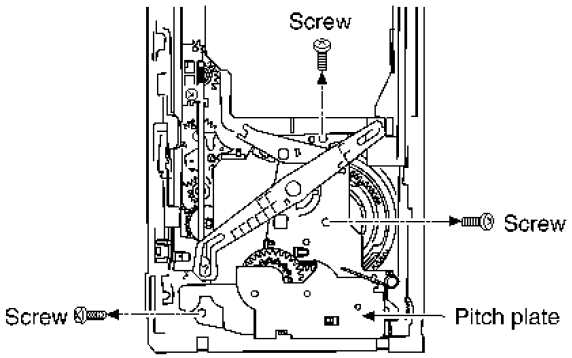

(Step 37)
Be sure the notice of below before fixing the traverse mechanism.

1. Check that 2 holes of both pitch plate and main gear is fitted. (Refer to Fig.1)
   If it's not fitted, put the gear for servicing in the hole of the bottom side and adjust it. (Refer to Fig.2)
2. Check that 2 holed of both pitch plate and speed up gear is futted. (Refer Fig.3)
   If it's not fitted turn the speed up gear to adjust it.

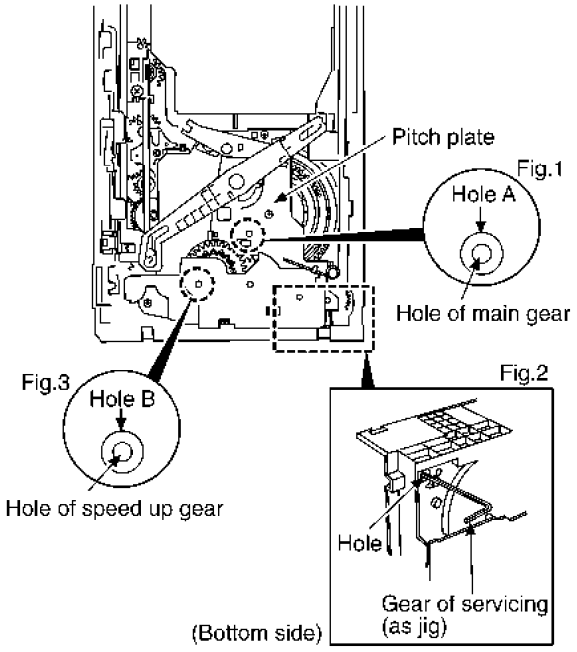

(Step 38)
Turn the separate lever (2) slowly toward left side until it clicks.

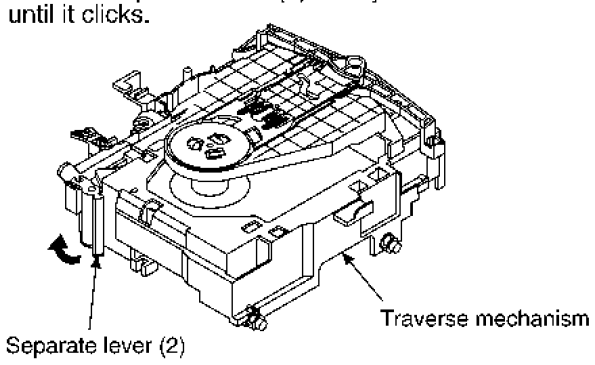

(Step 39)
Fix the left boss into the top groove of the UD. rack (L) and fix 2 bosses into the groove of the UD. rack (R).

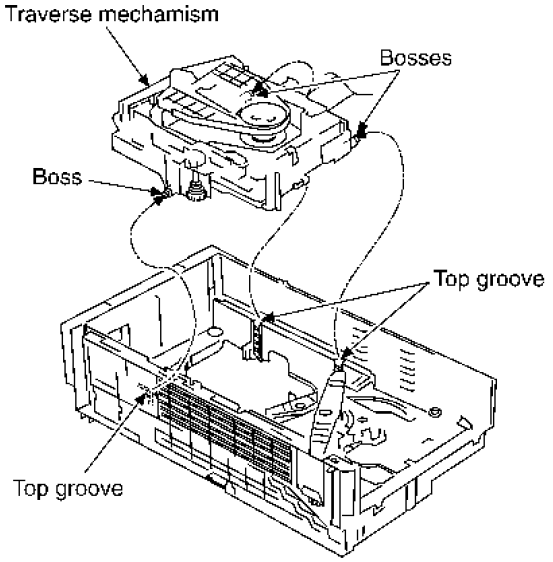

(Step 40)
At that time, fix separate lever (2) into the separate lever (1).

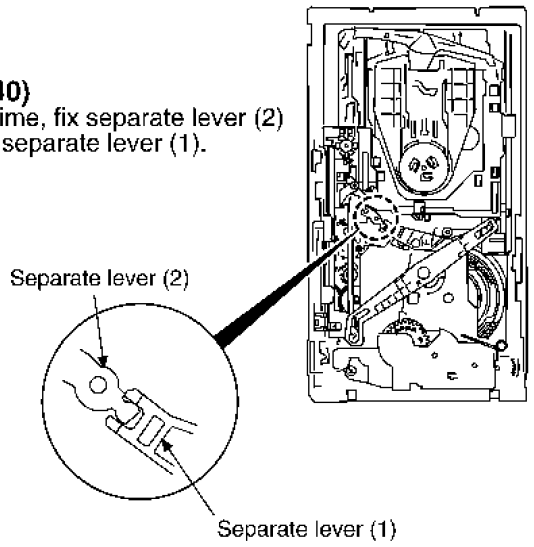

(Step 41)
After the traverse mechanism fixed,
confirm the phase in order below.

1. Check that 2 holes of both pitch plate and main gear is fitted. (Refer to Fig.1)
   If it's not fitted, put the gear for servicing in the hole of the bottom side and adjust it. (Refer to Fig.2)
2. Check that 2 holed of both pitch plate and speed up gear is futted. (Refer Fig.3)
   If it's not fitted turn the speed up gear to adjust it.

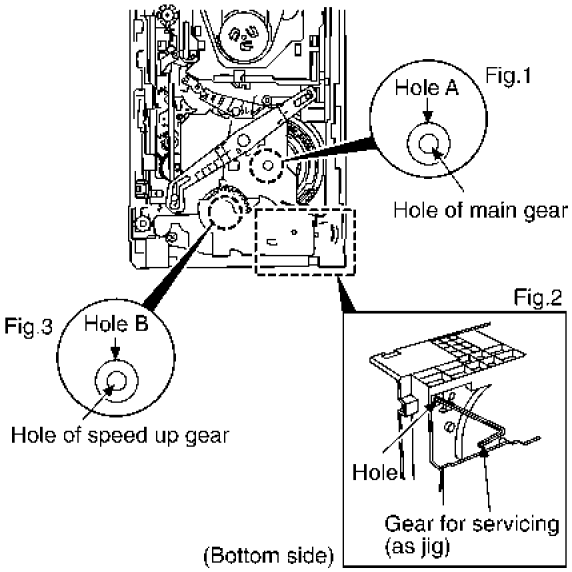

3. In the cog of road gear, the groove with it's cutting halfway set side ward. (Refer to Fig.4)
   Remove the traverse mechanism again when it is not set side ward and install it after adjustment of inserting position.
   NOTE: By this time, do not adjust to rotate the road gear.

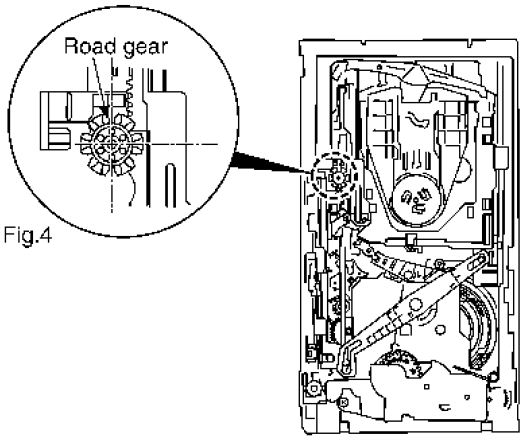

(Step 42)
After insertion of traverse mechanism, pull the UD. rack (R) on this side that each phase is "OK" and then lock the traverse mechanism.

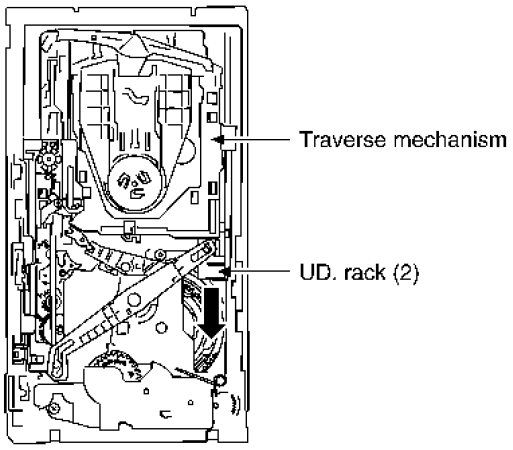

(Step 43)
Install the tray drive gear to select guide.
(Install the top rib of the tray drive gear with side ward.)

NOTE:
Confirm the each phase surely before install the tray drive gear. (Refer to Step 41).

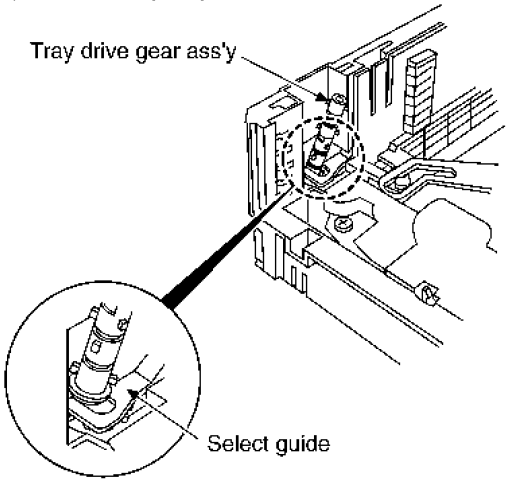

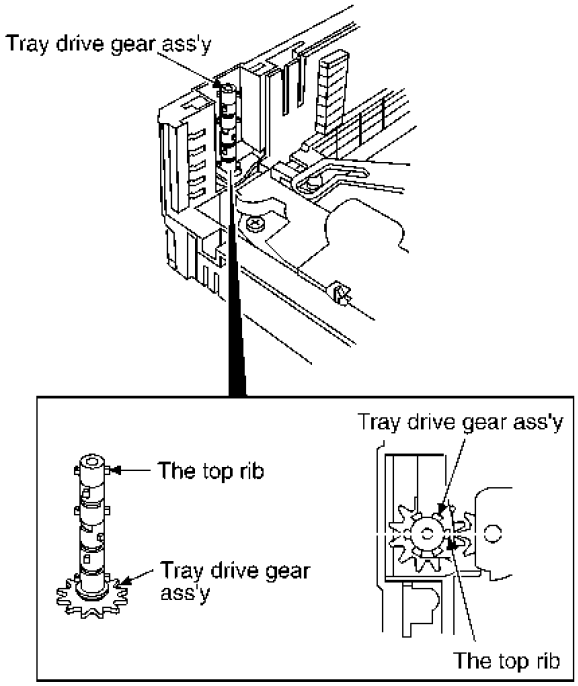

(Step 44)
Insert the tray gear shaft.

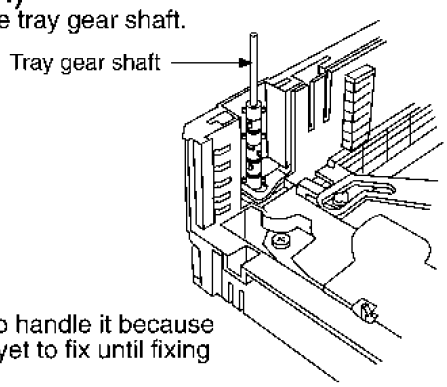

NOTE:
Be careful to handle it because the shaft is yet to fix until fixing top cover.

(Step 45)
Move the tray guide (R) and (L) to direction of arrow that fixed (stopped) it and install 5 pieces of disc tray.

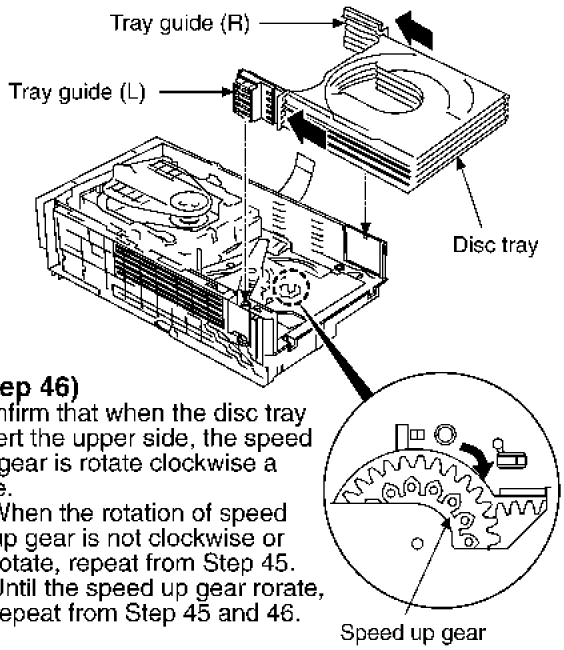

(Step 46)
Confirm that when the disc tray insert the upper side, the speed up gear is rotate clockwise a little.
- When the rotation of speed up gear is not clockwise or rotate, repeat from Step 45.
- Until the speed up gear rorate, repeat from Step 45 and 46.

NOTE:
While keeping all postion, install 5 pieces of disc tray.

(Step 47)
Insert 5 pieces of disc tray at the same time until it's stop.

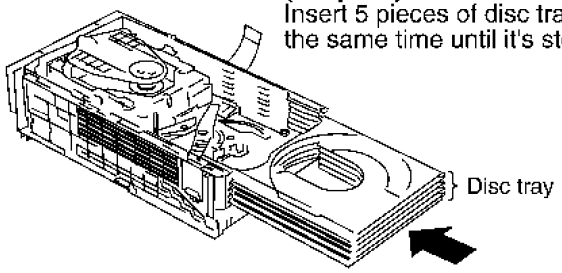

(Step 48)
Turn the traverse side 180°.

(Step 49)
While install the tip of speed up lock beween tray (No.1) of the most lower side and pitch plate for the time being.
(Do not to insert the cog of speed up gear), insert it to boss.

NOTE:
At that time, do not move the tray.
(See the tray the most front side)

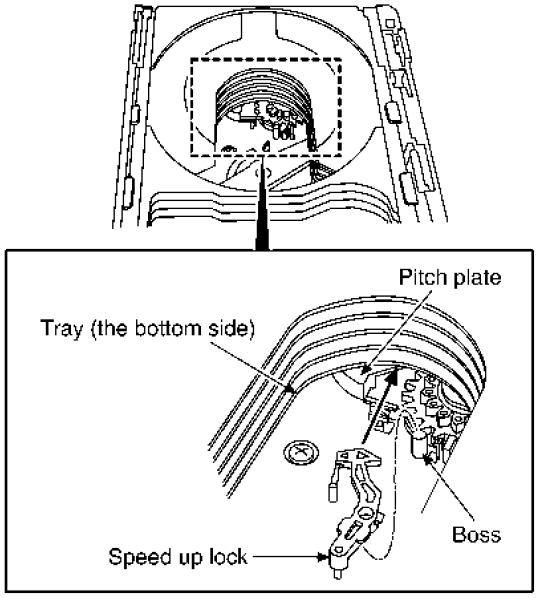

(Step 50)
Insert the rib of speed up lock into a groove of main gear, and lock it with 2 claws.

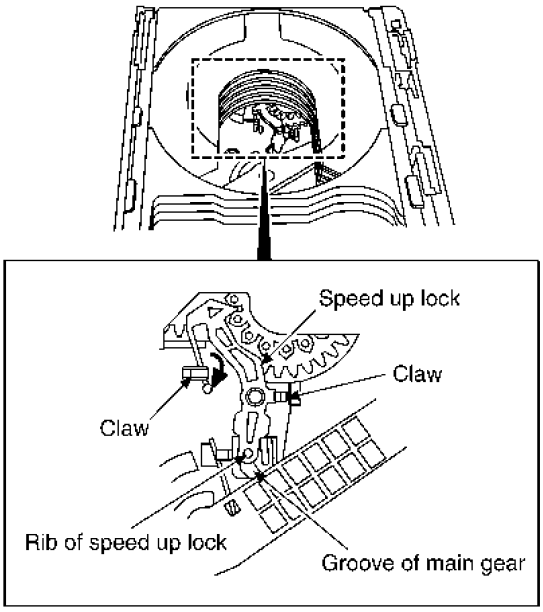

(Step 51)
Move the bottom tray to the arrow while pushing the top of the speed up gear. And insert it to a cog of the speed up gear.

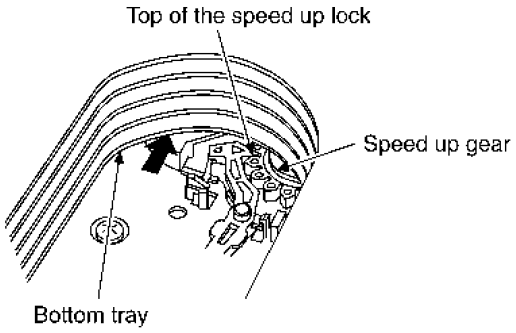

(Step 52)
Install the open switch lever.
(Put the boss into the hole of the mechanism base.)

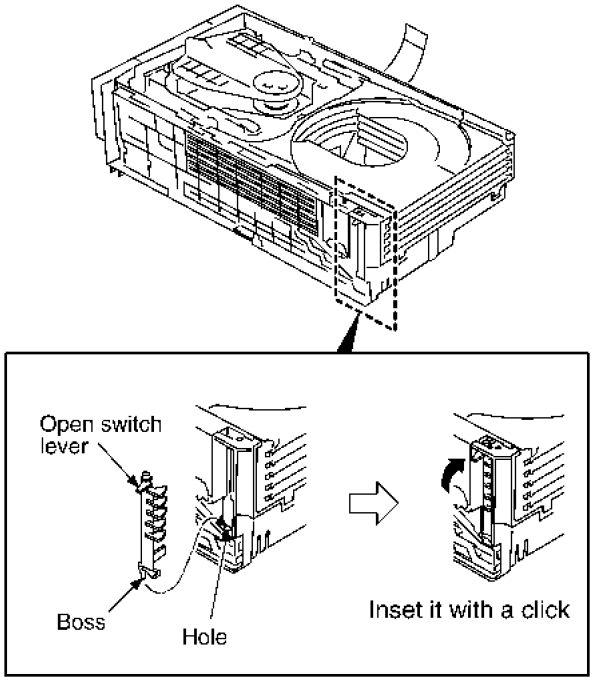

(Step 53)
Install the top cover.
Fix it into hooks and slide direction to the arrow.
NOTE:
The claw should be latched.

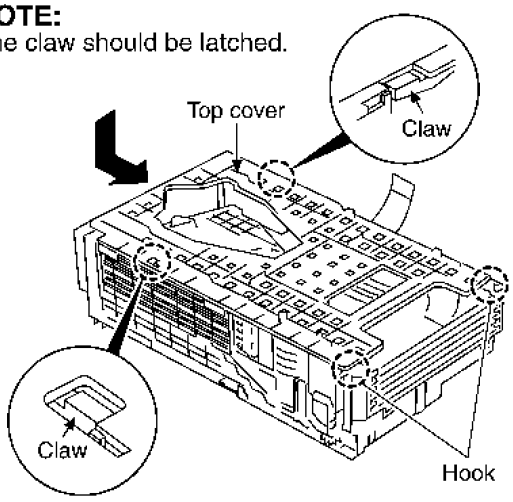

11.22. Disassembly for Traverse Unit

- Follow the **(Step 1)** - **(Step 10)** of item 11.19.2.
- Follow the **(Step 1)** - **(Step 3)** of item 11.19.3.
- Follow the **(Step 1)** - **(Step 7)** of item 11.13
- Follow the **(Step 1)** - **(Step 7)** of item 11.14

Step 1
Shift ribs of both side to the arrow direction.
(A vertical rack (R) slides and groove opens)

Step 2
Remove CD traverse deck.

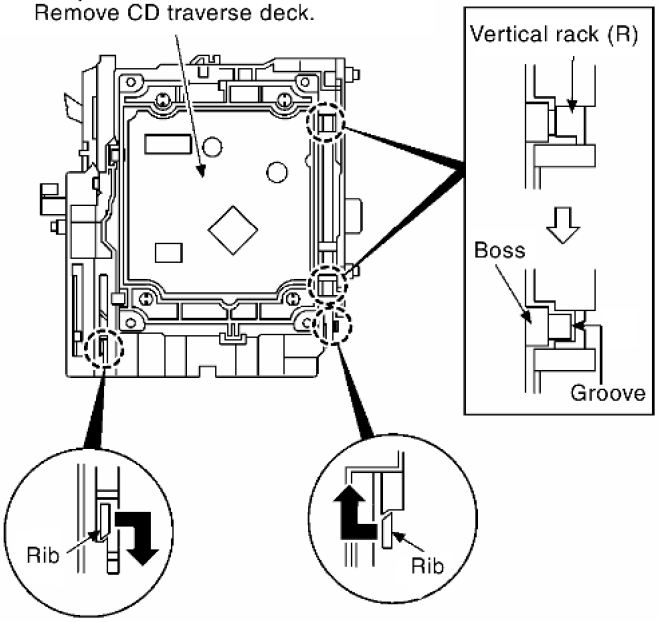

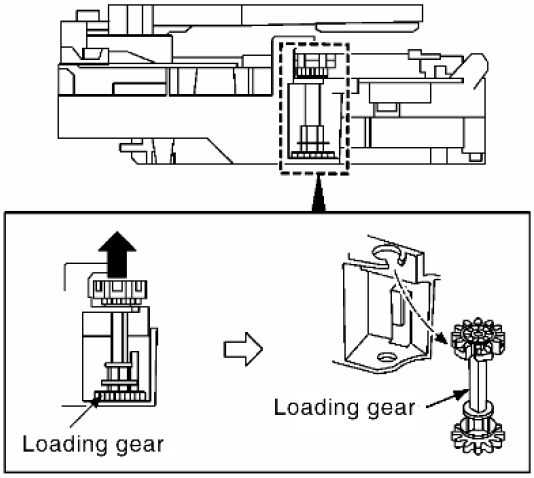

Step 3
Lift a loading gear slightly and pull out.

Step 4
Fixing lever to the arrow direction, rotate a traverse.

Step 5
Remove catch and take out a clamp guide.

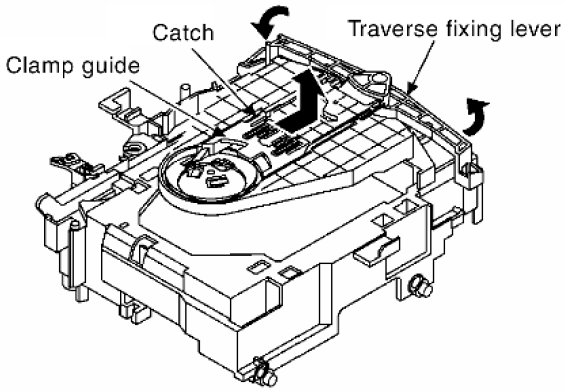

Step 6
Remove a traverse fixing lever.

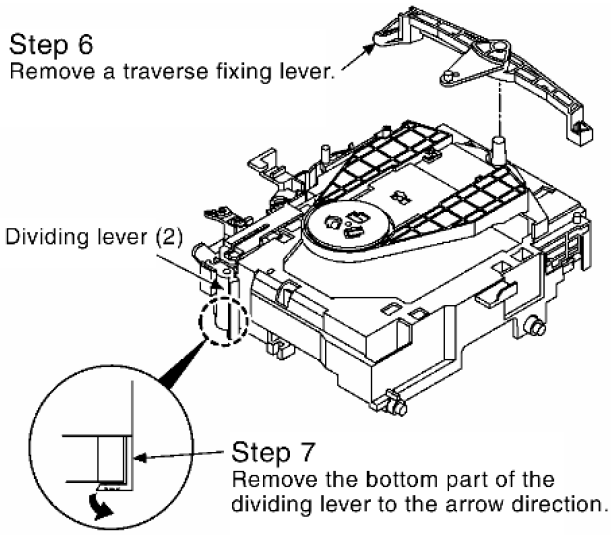

Step 7
Remove the bottom part of the dividing lever to the arrow direction.

Step 8
Slide a traverse sliding plate to the arrow direction (1), and shift a rib to the arrow direction (2).

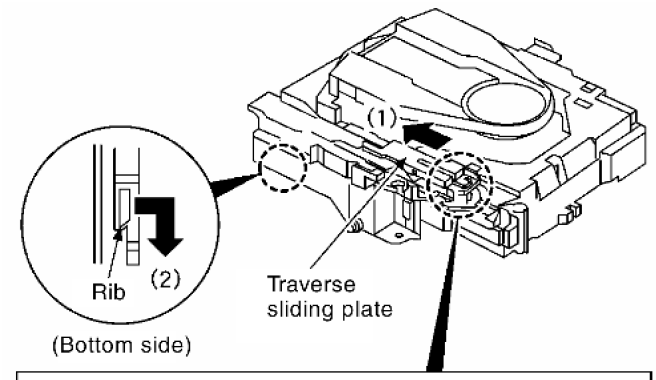

Step 9
Shifting a traverse sliding plate slightly and rotate a tray change lever.

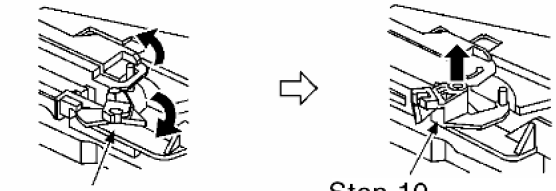

Step 10
Remove a tray change lever.

Step 11
Holding the catch down, slide a traverse sliding plate to the arrow direction and remove it.

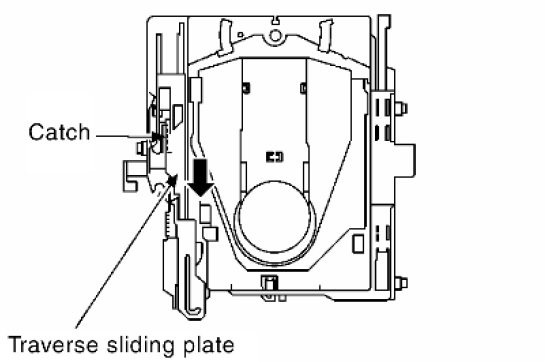

11.23. Handling of cassette tape jam

・Follow the (Step 1) - (Step 4) of Item 11.2.

Step 1 If the cassette tape is not ejected due to twining around capstan or pinch roller during playing or recording, rotate a flywheel F to the arrow direction to remove twined tape.

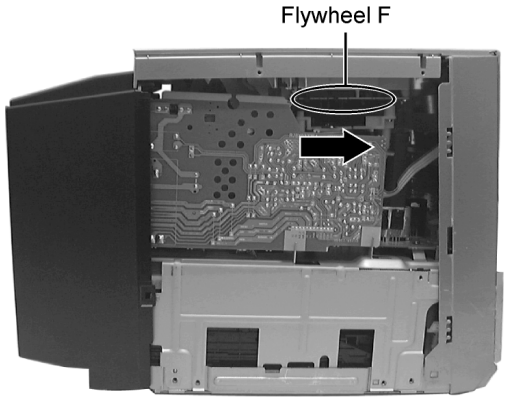

Step 2 Push the lever to the arrow direction, open the cassette cover and take out the cassette tape.

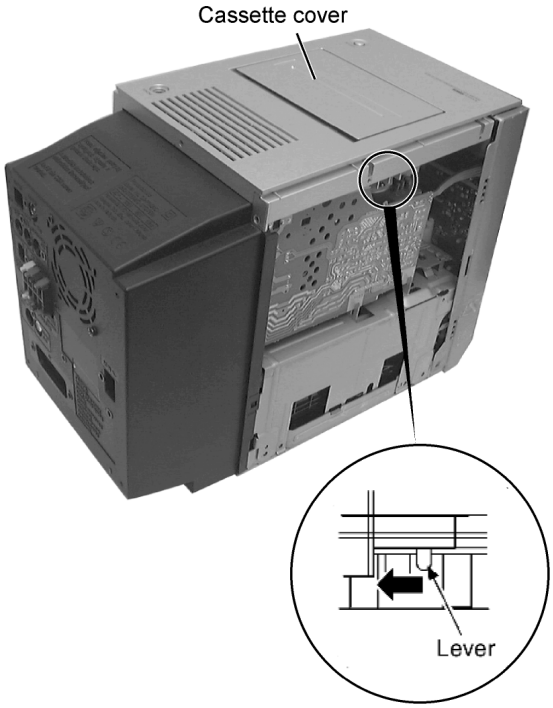

12 Self-Diagnosis Function

This unit is equipped with the self-diagnosis function, which displays an error when it occurs, for use during servicing.

12.1. Automatic Displayed Error Codes

12.1.1. Automatic Display Function

For a power unit error, the code is automatically displayed.

F61: Automatically displayed on the LCD of the player.

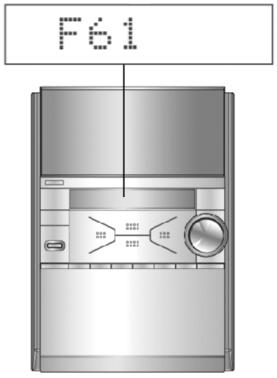

Fig. 12-1

12.1.2. Re-Display

· **For F61 Display**

– When the code, F61 is displayed, the power is automatically turned off.

– The code, F61 is displayed for three seconds, and then the current time appears.

– To retrieve the code, turn on the power button so that the code F61 appears, however, is switched to time display after three seconds, and the power is automatically turned off.

· **For F76 Display**

– The abnormalities of an output or abnormalities in the power supply of POWER AMP IC.

12.1.3. Description of Error Code

12.1.3.1. F61

· **State, Condition**

When the power is turned on, the unit is automatically turned off. The power does not turn on.

· **Cause, Troubleshooting**

Power circuit system failure and/or direct current flown to speaker terminal
Identify the cause and replace with new parts.

12.2. Memorized Error Codes

12.2.1. Activating Self-Diagnosis Function and Displaying Method

1. Turn on the power.
2. Select DVD/CD function. With no DVD/CD inserted in the player, press and hold down the ■ button for at least two seconds, and press the “0” button on the remote control for at least two seconds in order to display “DVD_F_ _ _ ”.
3. Press the ■ button. If a memorized error is detected, the result of self diagnosis is displayed. (Ex.: T H15)
   If several errors are detected, press the ■ button to display each.

Fig. 12-2

12.2.2. Re-Display

- Press the power button to turn off the power, and then turn on the power.
- The details of self diagnosis are stored in the unit memory.
  To retrieve them, follow the procedure described the above, “Activating Self-Diagnosis Function and Displaying Method”.

12.3. Service Mode Table 1

Following modes are available with combinations of the pressed buttons on the player and on the remote controller unit.

Player	Remote controller unit	Usage
■ button	0	Error code display (Refer to the item, 9.4. DVD Error Code Description)
	5	Tilt adjustment
	6	Region number and broadcasting system check
	7	Built-in program version check
	DISPLAY	DVD laser drive current check
	3	CD laser drive current check
	PAUSE	Writing of laser drive current value after replacement of optical pickup (Do use this function only when optical pickup is replaced.)
	≥10	Initialization of the player (factory setting is restored.) Used after replacement of micro-computer and its peripherals and printed circuit board.

12.4. DVD/CD Self-Diagnosis Error Code Description

Error Code	State, Conditon	Cause, Troubleshooting
H15	The disc tray cannot be opened: it closes spontaneously.	Disc tray open/close detection switch (S1001) failure. (Check and replace)
H16	The disc tray cannot be closed: it opens spontaneously.	

Error Code	Meaning	Details
U. H. Error		
U11	Focus servo failure	
H01	Tray loading failure	
H02	Spindle servo failure	(Spindle servo, DSC, SP motor, CLV servo failure)
H03	Traverse motor failure	
H04	Tracking servo error	
H05	Seek timeout failure	
Decoder related		
F220	Y level adjustment failure	Brightness signal level adjustment cannot be properly operated
F221	C level adjustment failure	Color signal level adjustment cannot be properly operated
II C error		
F4FF	Compulsory initialization failure (time out)	
DSC related		
F500	DSC error	DSC stops due to servo failure. (Startup, focus failure, etc.)
F501	DSC not ready	Communication failure between DSC and system computer (No communication because DSC does not move)
F502	DSC time out failure	See F500
F503	DSC communication failure	Communication failure (Result failure occurs after communication command is transmitted.)
F504	Data slice offset adjustment failure	Not in use. (FEP error)
F505	DSC Attention Error	see F500.
F506	Invalid media	Disc is placed upside down; TOC is unreadable or invalid disc is inserted.
ODC related		
F600	Control information unattainable due to demodulation error	Operation stops because navigation data cannot be obtained due to demodulation system failure.

Error Code	Meaning	Details
F601	Unknown sector ID requested	Operation stops because access of illegal ID data is requested.
F602	LEAD-IN unattainable due to demodulation error	Unable to read LEAD IN data
F603	KEYDET unattainable due to demodulation error	Unable to obtain CSS data
F610	ODC failure	No permission of command issue
F611	6626 QCODE don't read ERROR	Unable to obtain seek address at CD system
F612	No CRC OK during a certain time of duration	Unable to obtain ID data at DVD system
F630	No response to KEY DET makeshift	(Internal use)
F631	CPPM KEY DET unavailable to FILE end terminal	CPPM fail system cannot be read due to scratch.
F632	CPPM KEY DET unavailable	Revoke or altered.
Microcomputer error		
F700	MBX overflow	When replying a message to Disc Manager. (Operation continues)
F701	Message command incomplete	A message is issued before replying to Disc Manager.
F702	Message command changed	A message is issued before replying to Disc manager.
F710	AD conversion at AN0 incomplete	Conversion cannot be complete within a designated time during check of AD conversion before Y/C automatic adjustment.
F711	AD conversion at AN1 incomplete	Conversion cannot be complete within a disignated time during check of AD conversion before Y/C automatic adjustment.
F712	AD conversion at AN0 dispersed	Conversion result exceeds standards while a designated value is set during check of AD conversion before Y/C automatic adjustment.
F713	AD conversion at AN1 dispersed	Conversion result exceeds standards while a designated value is set during check of AD conversion before Y/C automatic adjustment.
F720	DA conversion at AN0 unchangeable	Conversion result exceeds standards while a designated value is set during check of AD conversion before Y/C automatic adjustment.
F721	DA conversion at AN1 unchangeable	Conversion result exceeds standards exceeds standards while a designated value is set during check of AD conversion before Y/C automatic adjustment.
F880	Unsuitable task number	When a message arrives from not existing task (error stops)
F890	A message is sent during AV task transmission	During transmission of a message to AV task (error stops)
F891	Unable to transmit a message to AV task	When a message starts transmission to AV task (error stops)
F893	From altered	
F894	EEPROM failure	
F895	PERR JMP MI SMUCH	Firm device incompatible (non-conformant destination value)
F896	PERR JMP NON	Firm device incompatible (non existing jumper)
F897	PERR NO INIT	Initialization incomplete
F8A0	Unsuitable message command	When a message starts transmission to AV task (error stops)

12.5. Error Codes Stored During No Play

Error Code	Meaning	System Computer Item	Setting Task	Internal error in system computer
F0BF	6) Unable to replay due to physical layer identification failure	PCND_NOPLAY_PHYSICAL 0x50	DriveManager	0xD0BF
F0C0	8) DVD: Unable to replay due to no DVD Video/Audio/VR	PCND_NOPLAY_VIDEO 0x70	DiscManager	0xD0C0
F0C1	9) DVD: Prohibited due to illegal regional code	PCND_NOPLAY_RCD 0x80	DiscManager	0xD0C1
F0C2	A) DVD: No replay due to PAL system	PCND_NOPLAY_PAL 0x90	DiscManager	0xD0C2
F0C3	B) DVD: All title replay prohibited in parental setting	PCND_NOPLAY_PTL 0xA0	DiscManager	0xD0C3
F0C4	C) VCD: Prohibited due to PHOTO CD format	PCND_NOPLAY_PHOTOCD 0xB0	DiscManager	0xD0C4
F0C5	D) VCD/CD: Prohibited due to CD-ROM without CD-DA	PCND_NOPLAY_CDROM 0xC0	DiscManager	0xD0C5

12.6. Service Mode Table 2

Following modes are available with combinations of the pressed buttons on the player and on the remote controller unit.

Item	Operational Condition and Key Function	Details	Display	To Exit Mode
Jitter display	While the player is stopped and no disc is inserted, press and hold down the ■ button on the player and the number button, "5" on the remote controller unit.	Jitter display Measures and displays jitter. Measurement is repeated every second. Read error counter starts at 0 at the mode setting, and increased by one as data read fails at target block. A small defect is allowed to correct by retry. Any possibility is counted as one increment. Repetitive errors after retry increase by two levels or more.	xxx*1 _yyy*2 _zz*3 *1 : Jitter display mode *2 : Jitter measurement value *3 : Read error counter *4 : Focus driving value Values are shown to one decimal place in the decimal digit.Focus driving value is displayed in the hexadecimal digit.	Press the STOP.

Item	Operational Condition and Key Function	Details	Display	To Exit Mode
Error code display	While the player is stopped and no disc is inserted, press and hold down the ■ button on the player and the number button, “0” on the remote controller unit.	Error code display Displays the latest error code stored in EEPROM.	DVDnn_F--- *nn: Error history *--: Error number	Automatically exits the mode after five seconds.
Measurement of laser current electricity initialization value	While the player is stopped and no disc is inserted, press and hold down the ■ button on the player and the ❚❚ button on the remote controller unit.	Measurement of laser current electricity initialization value Memorizes each initialization value of DVD and CD in EEPROM.	LDO*1 _034*2 _028*3 *1 : Laser current electricity measurement mode *2 : DVD current electricity value *3 : CD current electricity value Values are shown in the decimal digit. The above example indicates that the current electricity initialization value is 34mA at DVD laser and 28mA at CD laser when laser is turned on.	Automatically exits the mode after five seconds.
Measurement of DVD laser current electricity	While the player is stopped and no disc is inserted, press and hold down the ■ button on the player and the DISPLAY button on the remote controller unit.	Measurement of DVD laser current electricity Measures DVD laser current electricity and displays the result together with the initialization value stored in EEPROM. After measurement, DVD laser is lit till the power is turned off (or goes off when the primary power is turned off).	LDD*1 _034*2 _032*3 *1 : DVD laser current electricity measurement mode *2 : Current electricity initialization value stored in EEPROM *3 : Present value of current electricity Values are shown in the decimal digit. The above example indicates that the current electricity initialization value is 34mA and its present value is 32mA.	Automatically exits the mode after five seconds.
ADSC internal RAM display	While the player is stopped and no disc is inserted, press and hold down the ■ button on the player and the number button “1” or “2” on the remote controller unit.	ADSC internal RAM display Reads and displays the RAM value inside ADSC. The address is renewed when the CLEAR key is pressed so that the values at eleven points appear.	A*1 _0FA*2 _6901*3 *1 :ADSC internal RAM display mode *2 : Address *3 : RAM value at displayed address Values are shown in the hexadecimal digit. The above example indicates that ADSC value at the address, 0FAh is 6901h.	Press the STOP.
Measurement of CD laser current electricity	While the player is stopped and no disc is inserted, press and hold down the ■ button on the player and the number button “3” on the remote controller unit.	Measurement of CD laser current electricity Measures CD laser current electricity and displays the result together with the initialization value stored in EEPROM. After measurement, CD laser is lit till the power is turned off (or goes off when the primary power is turned off).	LDC*1 _028*2 _026*3 *1 : CD laser current electricity measurement mode *2 : Current electricity initialization value stored in EEPROM *3 : Present value of current electricity Values are shown in the decimal digit. The above example indicates the current electricity initialization value is 28mA and its present value is 26mA when laser is turned on.	
User initialization	While the player is stopped and no disc is inserted, press and hold down the ■ button on the player and the number button ≥10 on the remote controller unit.	User initialization The user setting recovers the factory setting.	“INITIALIZE”	Automatically exits the mode after five seconds.
Region display	While the player is stopped and no disc is inserted, press and hold down the ■ button on the player and the number button, “6” on the remote controller unit.	Region display	[srrrxxyzzzz] s : Panecon model type rrr : Panecon release number x : Syscon generation (45) y: Syscon model type zzz: Syscon release number	Automatically exits the mode after five seconds.

Item	Operational Condition and Key Function	Details	Display	To Exit Mode
Firm version display	While the player is stopped and no disc is inserted, press and hold down the ■ button on the player and the number button, “7” on the remote controller unit.	Firm version display	rrr*1 _xx*2 y*3 zzz*4 *1 : Panel computer release number *2 : System computer generation *3 : System computer model type *4 : System computer release number	Automatically exits the mode after five seconds.
Region and firm display	While the player is stopped and no disc is inserted, press and hold down the ■ button on the player and the number button, “8” on the remote controller unit.	Region and firm version display	_r*1 __xx*2 y*3 zzz*4 *1 : Region number *2 : System computer generation *3 : System computer model type *4 : System computer release number	Automatically exits the mode after five seconds.
Laser use time	While the player is stopped and no disc is inserted, press and hold down the ■ button on the player and the ∧ button on the remote controller unit.	Laser usage time Measures each for DVD and CD respectively.	T1_1234_5678 The numbers in the left show usage time for DVD laser and those in the right for CD laser. The four-digit number is shown by the ten hours in the decimal digit. The number after 0000 is 9999.	Automatically exits the mode after five seconds.
Reset laser use time	While the usage time 1 is displayed, press and hold down the ■ button on the player and the ∨ button on the remote controller unit.	Laser usage time reset Resets both for DVD and CD at once.	T1_0000_0000	Automatically exits the mode after five seconds.
Spindle use time	While the player is stopped and no disc is inserted, press and hold down the ■ button on the player and the ► button on the remote controller unit.	Spindle motor usage time	T2_1234 The four-digit number is shown by the ten hours in the decimal digit. The number after 0000 is 9999.	Automatically exits the mode after five seconds.
Reset spindle use time	While the usage time 2 is displayed, press and hold down the ■ button on the player and the ◄ button on the remote controller unit.	Usage time 2 reset Spindle motor usage time	T2_0000	Automatically exits the mode after five seconds.
Communication error display	While the player is stopped and no disc is inserted, press and hold down the ■ button on the player and the MENU button on the remote controller unit.	Displays frequency of communication errors between system computer firm IC and mechanical computer IC during DVD module.	-ERR_00/30	Automatically exits the mode after five seconds.

12.7. Tray Lock Function

12.7.1. Setting

· Disc Lock Function

1. With the SELECTOR on DVD/CD and POWER ON, hold down the [■ STOP] KEY on the main unit, and then press the [POWER] KEY on the remote control for 3 seconds to enter to Lock mode A.[_ _ _LOCKED_] will be displayed for 3 seconds, and then current disc will begin playing.
2. In Lock mode A, the following key is disabled.

   [OPEN/CLOSE]

· Operation Lock Function

1. With the SELECTOR on DVD/CD and POWER ON, hold down the [CD PLAY] KEY on the main unit, and then press the [POWER] KEY on the remote control for 3 seconds to enter Lock mode B.

   [_ _ _ LOCKED_] will be displayed for 3 seconds, and the current disc will begin playing.
2. Lock mode B primarily controls the selector and disc operations, and disenables for the following keys.

Note:

OPEN/CLOSE ⏏ button are invalid and the player displays "___LOCKED_" while the lock function mode is entered.

· **Prohibiting operation of selector and disk**

1. Select the DVD/CD function.
2. Press and hold down the ► button on the player and the power button on the remote controller unit for at least three seconds. (The message, "___LOCKED_" appears when the function is activated.)

Note:

The following buttons are invalid and the player displays "___LOCKED_" while the lock function mode is entered.

Main unit: PLAY, PAUSE II, STOP ■, ⏏OPEN/CLOSE, ∨SKIP∧, DISC EXCHANGE, ⏮/REVERSE, ⏭/FORWARD

Remote control: PLAY MODE, CANCEL, PLAY, MENU, TOP MENU, ENTER

12.8. Things to Do After Repair (Precaution)

Follow the procedure described below after repair.

1. While the power is on, press the ⏏ button to close the tray.
2. Press the power button to turn off the power.
3. Unplug the power cable.

Note:

It is prohibited to unplug the power cable while the tray is opened and to close the tray manually.

This would cause the mechanism unit to be jammed.

12.9. Displaying Self-Diagnostic Results

<Cassette Deck Section> (H01, H02, H03, F01, F02)

1. Enter the self-diagnostic mode, following the instructions described in [11.2. Entering Self-Diagnostic Mode].
2. Insert a normal-positioned music tape with erase prevention niches on both Sides A and B. Press [TAPE ►] button to activate the TPS operation so that the tape automatically stops at an interval between music selections.
3. Press [STOP ■ /- DEMO] and [TAPE ►] buttons together on the remote controller. (Recording does not start.)
4. Then, insert a Cr02-positioned blank cassette tape with an erase prevention niche of Side A or B set to the left side.
5. Press[∧ /FF/ ►►I] button on remote control. The tape will be forwarded and automatically stop after two seconds.
6. Remove the cassette tape, and set the other side.
7. Press [∨ / REW/ I◄◄] button on remote control. The tape will be rewound and automatically stops after two seconds.
8. Press [STOP ■ -/ DEMO] button on the unit.

If an error is found, a self-diagnostic key appears on the display.

If several errors are found, the display shows these keys when [STOP ■ /-DEMO] button is pressed repeatedly. (Ex.:H01 - H02 - F01 - H01)

12.10. Error detection for CD block

Error Code	Abnormal Items	Possible Cause
F15	CD REST SW abnormal	CD traverse position intial setting operation failsfe counter (1000 ms)waiting for REST SW to turn on. Error No. shall be clear by force or during coldstart.
H15	The CD tray closes	CD disc tray detect switch NG. (Check and replace.)
F26	CD servo LSI command signal abnormal	CD function DTMS command, after system setting, if SENSE = 'L' cannot be detected. Memory shall contain F26 code. After Power on, CD function shall continue, error shall occur "NO DISC" Error No. shall be clear by force or coldstart.
F28	DISC LOAD abnormal	While going to play position, iffailsafe counter is finished and switch to o change or switch target condition was not achieve, this error shall be memorized. Next time mechanism operates, it shall do coldstart. Error No. shall be clear by force or coldstart.
F29	DISC unload abnormal	While going to play position, if failsafe counter is finished and switch no change or switch target condition was not achieve, this error shall be memorized. Next time mechanism operates, it shall do coldstart. Error No. shall be clear by force or coldstart.

Error Code	Abnormal Items	Possible Cause
F27	Slide operation abnormal	During vertical operation, if faisafe timer is finished and switch no change or switch target condition was not achieve, this error shall be memorized. Next time mechanism operates, it shall do coldstart. ErrorNo. shall be clear by force or coldstart.
F17	Down SW abnormal	During vertical operation going to the bottom position, if failsafe timer is finished and switch no change or switch target condition was not achieve, this error shall be memorized. The Next time mechanism operates, it shall do mechanism initialization. Error No. shall be clear by force or coldstart.
F22	Loading Mode/ Mecha abnormal	During mecha initialization, Loading mode mechanism abnormal, normal operation cannot be achieve. The next time mechanism operates, it shall do mechanism initialization. Error No. shall be clear by force or coldstart.
Abnormal item	Error Display	Method of detection
F75	CD power abnormal	under normal operation (self-diagnostic mode inclusive), check if CDRST is H for SELECTOR at CD. If it is not H after 1 sec, it shall be memorised as an error.

12.11. Error detection code for Cassette Mechanism Block

Error Code	Abnormal Items	Possible Cause
H01	MODE SW abnormal	Normal operation during mecha transition, MODE SW abnormal is memorised. The content of abnormality can be confirmed in the abnormal detection mode explained in the later section.
H02	REC INH SW abnormal	The content of abnormality can be confirmed in the abnormal detection mode explained in the later section.
H03	HALF SW abnormal	
F01	Reel pulse abnormal	
F02	TPS abnormal	

13 Cautions To Be Taken During Servicing

13.1. Recovery after the dvd player is repaired

- When Flash ROM or module(2) P.C.B. is replaced, carry out the recovery processing to optimize the drive. Playback the recovery disc to process the recovery automatically.
- Recovery disc (Product number=RFKZD03R005)
- Performing recovery
  1. Load the recovery disc (Product number: RFKZD03R005) to the player and run it.
  2. Recovery is performed automatically. When it is finished, a message appears on the screen.
  3. Remove the recovery disc.
  4. Turn off the power.

Note:

This unit requires no initialization process carried out after the traditional DVD players were repaired. When the recovery measures are taken, the customer setting will return to the factory setting as same as the procedure described in item “Initialization” in 9.6 is carried out. Write down the contents of the setting before recovery processing, and reset the player.

13.2. DVD Player Firmware Version Upgrade Process

Firmware of DVD player may upgrade to conform to improvement of its performance and quality including operational range, playability of non-standardized discs, etc. The version upgrade disc contains the recovery function, and the recovery disc is not necessary.

Note:

Version upgrade process cannot be complete if the AC power is cut off due to power failure and other occasions during the process. If this occurs, replace FLASH ROM and restart version upgrade. Version upgrade disc number is informed when ordered.

13.3. Firmware Version Upgrade Process by Using Disc and Recovery Process

- Recovery process
- Firmware version upgrade process

Both of the above procedures automatically start when the recovery disc is replayed.General CD-R disc allows version upgrade process and recovery process, making version upgrade through disc simple.
Recovery process: Optimization process of player after replacement of FLASH ROM, EEPROM, or module circuit board
Version upgrade process: Renewal of firmware for improvement of operational range and performance

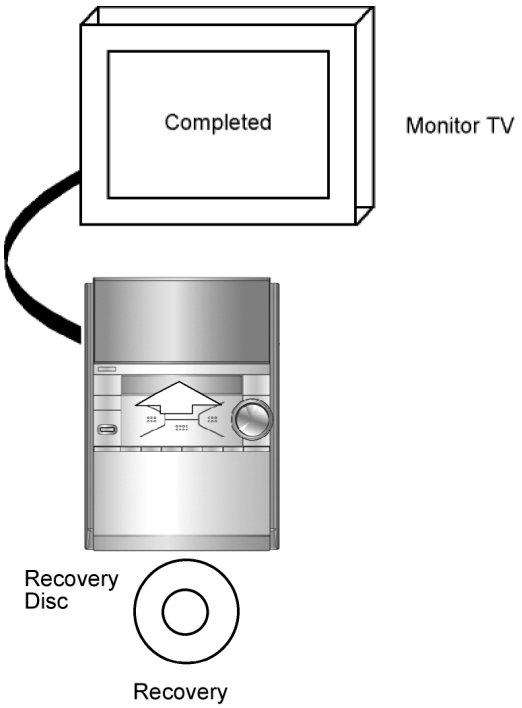

13.3.1. Self-Diagnosis Function

- Total usage time display (spindle motor, DVD/CD laser)
- ADSC internal RAM display
- Others: Last error count.....20 items

Efficiency of failure diagnosis is expected to improve by using the above functions together with the repair process.

[Purpose of Use]

Total usage time display: used for estimating a failure due to exhausted spindle motor, laser, or other parts.

ADSC internal RAM display: used for deciding servo system failure according to servo learning values.

13.4. Using Recovery Disc

13.4.1. Recovery Process

1. Insert the recovery disc (RFKZD03R005) to the player to replay.
2. The recovery process automatically starts, and a message of completion prompts on the screen.
3. Remove the disc.
4. Turn off the power.

13.4.2. Version Upgrade Process

1. Insert the recovery disc to the player to replay.
2. The version of player is automatically checked and prompts if necessary.
3. Select version upgrade process using the cursor keys on the remote controller unit. (Select YES or NO)
4. a. If YES is selected, the process starts.
   b. If NO is selected, only the recovery process is applied.
5. a. When the version upgrade process is complete, a message of completion appears on the screen. Remove the disc.
   b. Follow the instruction appearing on the screen, and remove the disc.
6. Turn off the power.

13.5. Total Usage Time Display

1. Details of Operation/Display

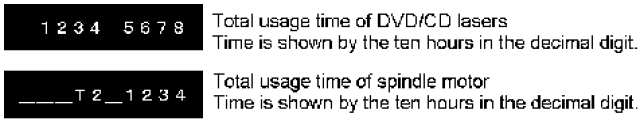

Keys for Operation:
Laser usage time: While the player is stopped and no disc is inserted, press both the ■ button on the player and the ∧ button on the remote controller unit.
Spindle motor usage time: While the player is stopped and no disc is inserted, press both the ■ button on the player and the ► button on the remote controller unit.

To reset the usage time, **while the usage time is displayed:**
Laser usage time: press both the ■ button on the player and the ∨ button on the remote controller unit.
Spindle motor usage time: press both the ■ button on the player and the ◄ button on the remote controller unit.

2. Purpose of Use

To obtain reference data of laser and spindle motor systems during failure diagnosis.
To check faulty parts during re-repair.

14 Procedure for Checking Operation of Individual Parts of Cassette Mechanism Unit

14.1. Operation Check with Cassette Tape

1. Pull up the EJECT lever using a rubber band. (Cf. Fig. 6)
2. Supply DC5V to MOTOR. (→ MOTOR rotates.) (Cf. Fig. 5)
3. Insert a cassette tape to the unit.
4. Supply DC9V to the plunger, and turn the power ON and OFF. (→ Power +PL, -PL) (Cf. Fig. 5)
   a. FWD PLAY: Supply the plunger power in a flash. (ON: approx. 5msec)
   b. FWD FF: Supply the plunger power in a flash at PLAY mode. (ON: approx. 5msec)
   c. STOP: Supply the plunger power in a flash at FWD FF mode. (ON: approx. 5msec)
   d. REV PLAY: Supply the plunger power in a normal timing at STOP mode. (ON: approx. 200msec)
   e. REV REW: Supply the plunger power in a flash at REV PLAY mode. (ON: approx. 50msec)
   f. STOP: Supply the plunger power in a flash at FF mode. (ON: approx. 50msec)
   Repeat the operation (→ FWD PLAY)
   (Note) Other operation may start if a timing of supplying the plunger power is missed.

14.1.1. Connection Status between Mechanism and Power Supply (Motor, Plunger)

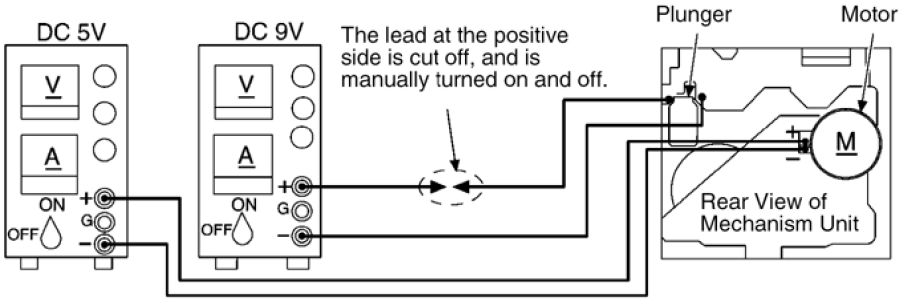

Fig. 5

14.1.2. Operative Parts of Mechanism Unit (EJECT lever fitted with rubber band, Plunger/Rib operation)

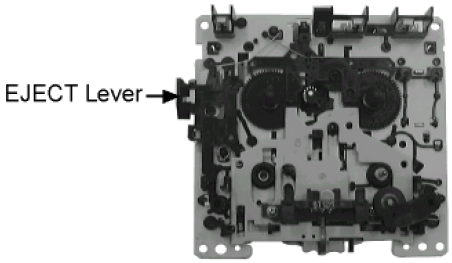

Fig. 6

14.2. Operation Check without Cassette Tape

1. Pull up the EJECT lever using a rubber band. (Cf. Fig. 6)
2. Supply DC5V to MOTOR. (→ MOTOR rotates.)
3. Lift up the mechanism unit's plunger/rib with the tip of a negative screwdriver, and operate the unit in the same timing as supplying the power. (Cf. Fig. 7)

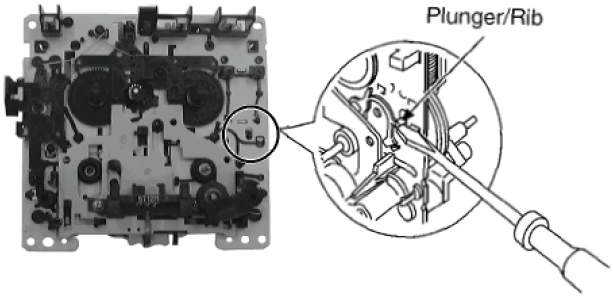

Fig. 7

15 Measurement And Adjustments

15.1. Tuner Section

15.1.1. AM-IF Alignment

· **AM-IF ALIGNMENT**

SIGNAL GENERATOR OR SWEEP GENERATOR		RADIO DIAL SETTING	INDICATOR (ELECTRONIC VOLTMETER OSCILLOSCOPE)	ADJUSTMENT(Shown in Fig.3)	REMARKS
CONNECTIONS	FREQUENCY				
Fashion a loop of several turns of wire and radiate signal into loop of receiver.	450 kHz	Point of non-interference (on/about 600 kHz)	Headphone Jack (32Ω) Fabricate the plug as shown in Fig. 2 and then connect the lead wires of the plug to the measuring instrument.	Z102 (AM IFT)	Adjust for maximum output.

· **AM-RF ALIGNMENT**

SIGNAL GENERATOR OR SWEEP GENERATOR		RADIO DIAL SETTING	INDICATOR (ELECTRONIC VOLTMETER OSCILLOSCOPE)	ADJUSTMENT(Shown in Fig.1)	REMARKS
CONNECTIONS	FREQUENCY				
Fashion a loop of several turns of wire and radiate signal into loop of receiver.	522 kHz	Tuning capacitor fully closed.	Headphone Jack (32Ω) Fabricate the plug as shown in Fig. 2 and then connect the lead wires of the plug to the measuring instrument.	Z101 (AM OSC Coil)	Adjust for maximum output.
Fashion a loop of several turns of wire and radiate signal into loop of receiver.	603 kHz	Tuning capacitor fully open.	Headphone Jack (32Ω) Fabricate the plug as shown in Fig. 2 and then connect the lead wires of the plug to the measuring instrument.	Z101 (AM ANT Coil)	Adjust for maximum output.

15.2. Cassette Deck Section

15.2.1. Requirements

· Test tape (QZZCFM) (QZZCWAT)
· Normal blank cassette tape (QZZCRA)
· Digital frequency counter
· Oscilloscope
· Electrical voltmeter
· Headphone jack output jig (Cf. Fig. 8)

15.2.2. Setting of Unit

· VOLUME: MAX

15.2.3. Preparations

1. Apply [11.2 Disassembly of Side Panel (L) & (R) and 11.3 Disassembly of Top Cabinet Unit] under [11. Disassembly and Main Component Replacement Procedures].

2. Remove 4 screws from the mechanism unit to disassemble. (Refer to [11.13. Procedure for Replacing Cassette Holder (Step 1)] under [11. Disassembly and Main Component Replacement Procedures].
3. Connect the headphone jack output jig (Cf. Fig. 8) to headphone jack.

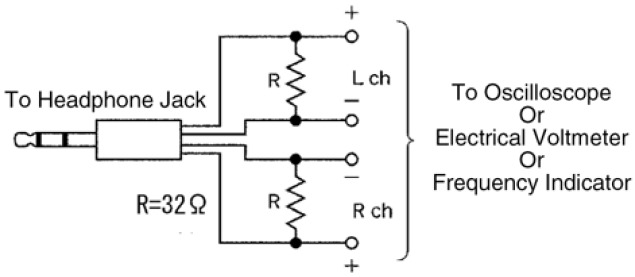

Fig. 8

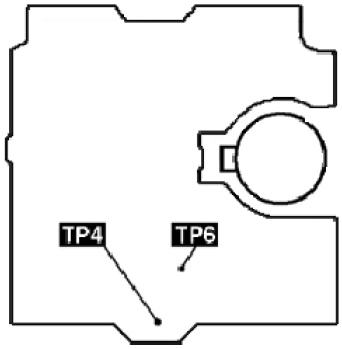

Fig. 9

15.2.4. Tape Speed Adjustment

・Normal speed adjustment (only during forward playback)
(Product reference value: 3,000±90Hz)

1. Connect a frequency indicator. (Cf. Fig. 12)
2. Playback the middle portion of the test tape (QZZCWAT).
3. Adjust the motor screw so that the following output level is produced. (Cf. Fig. 10)
   Adjustment Range: 3,000 ± 90Hz (a constant speed)

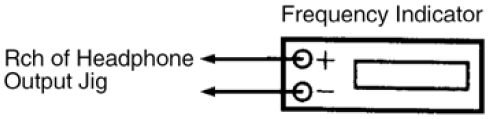

Fig. 10

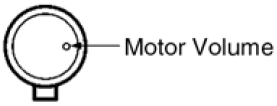

Fig. 11

15.2.5. Bias Voltage Check

1. Connect an electrical voltmeter. (Cf. Fig. 12)
2. Set the function to “TAPE” position.
3. Insert a normal blank cassette tape (QZZCRA).
4. While pressing and holding down [REC (● / ❚❚)] button, press [TAPE (▶)] button to pause the recording mode. (Repeat pressing the buttons till the recording pause mode is activated.)
5. Check that the output level is within the standard range.

Standard Range: 14 ± 4mV

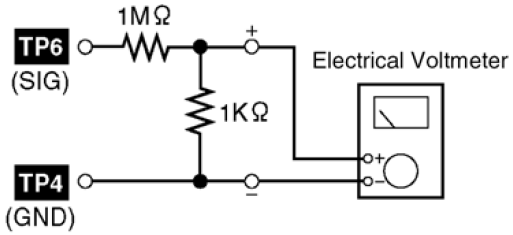

Fig. 12

15.2.6. Bias Frequency Check

1. Connect a digital frequency counter (Figure 13).
2. Set the function to “TAPE” position.
3. Insert a normal blank cassette tape (QZZCRA) and press “REC” mode on main unit.
4. Check that the output frequency is within the standard range.

Standard Value: 98 ±8 kHz

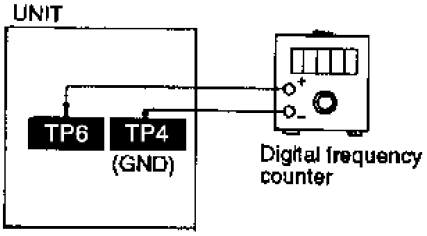

Fig. 13

16 Block Diagram

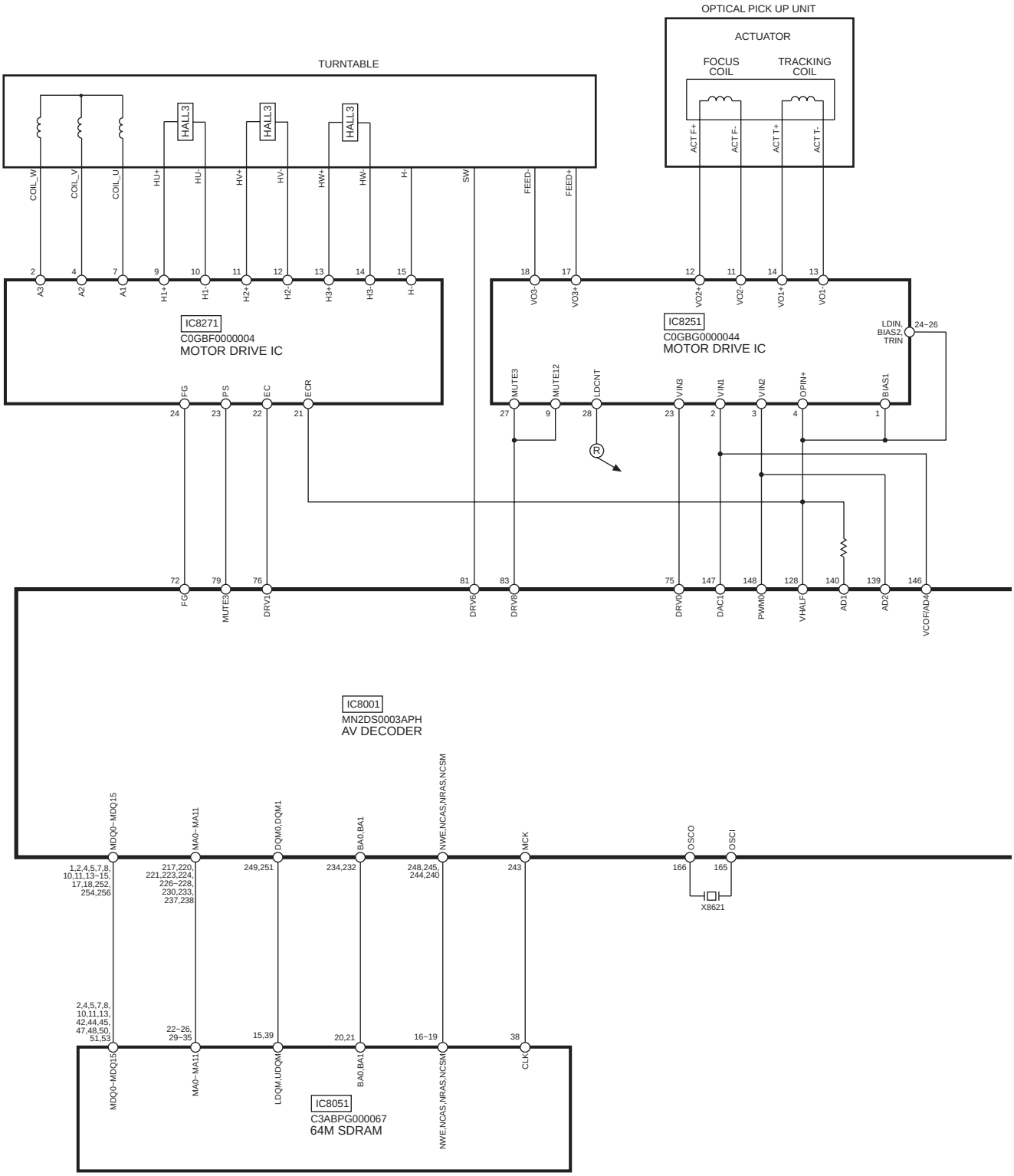

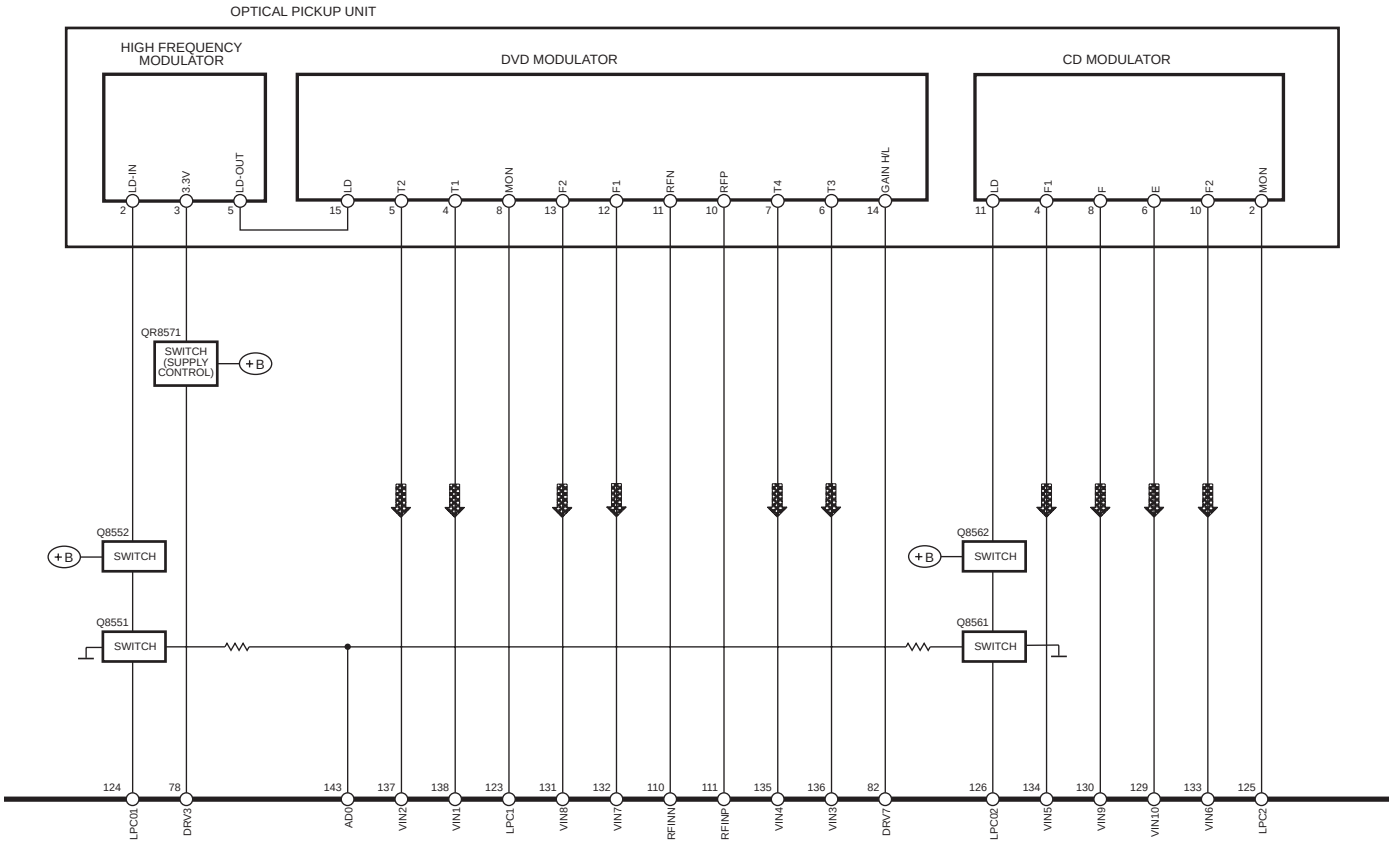

IC8001
MN2DS0003APH
AV DECODER

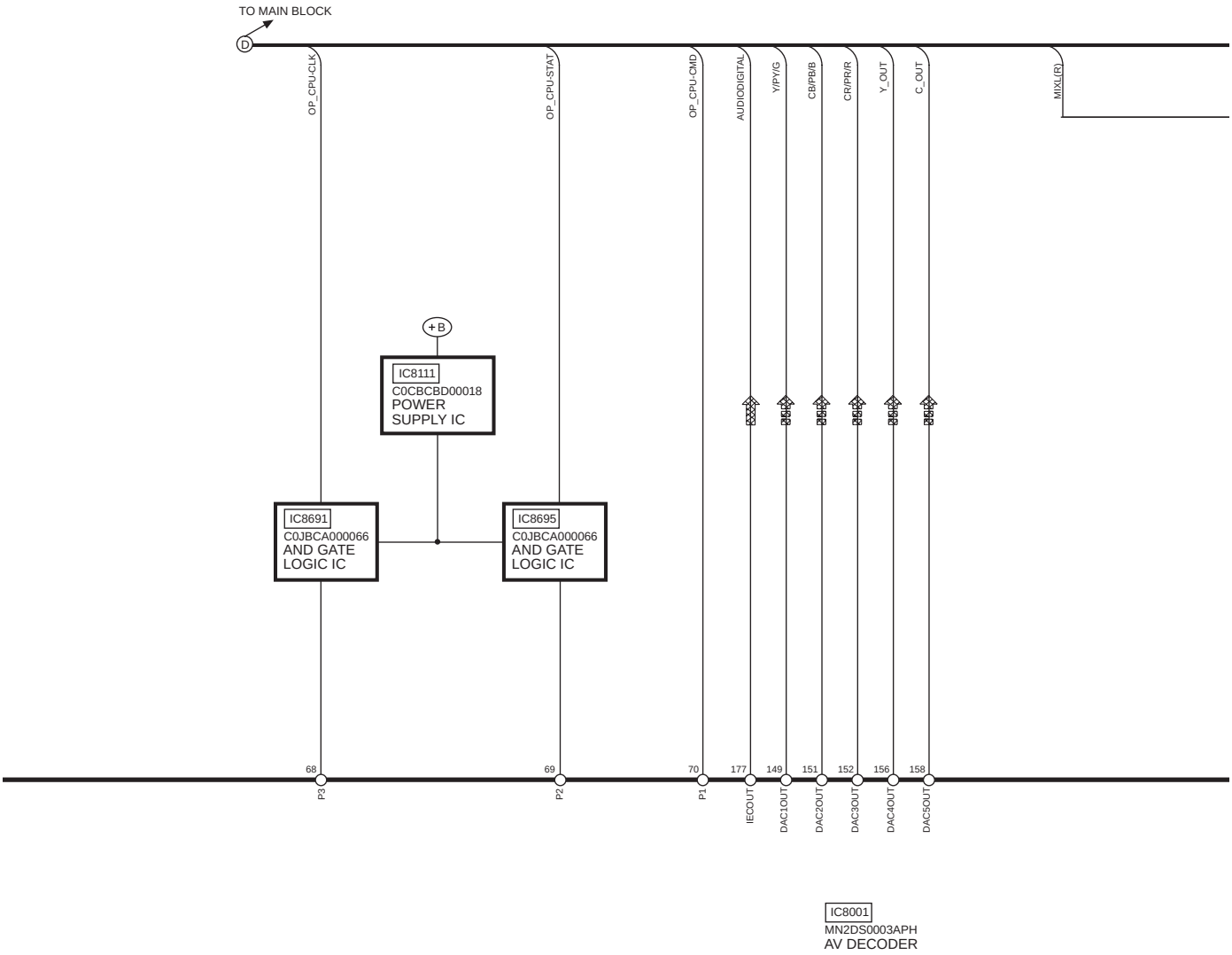
TO MAIN BLOCK
D
OP_CPU-CLK
OP_CPU-STAT
OP_CPU-CMD
AUDIODIGITAL
Y/PY/G
CB/PB/B
CR/PR/R
Y_OUT
C_OUT
MIXL(R)
+B
IC8111
C0CBCBD00018
POWER
SUPPLY IC
IC8691
C0JBCA000066
AND GATE
LOGIC IC
IC8695
C0JBCA000066
AND GATE
LOGIC IC
68
69
70
177
149
151
152
156
158
P3
P2
P1
IECOUT
DAC1OUT
DAC2OUT
DAC3OUT
DAC4OUT
DAC5OUT
IC8001
MN2DS0003APH
AV DECODER

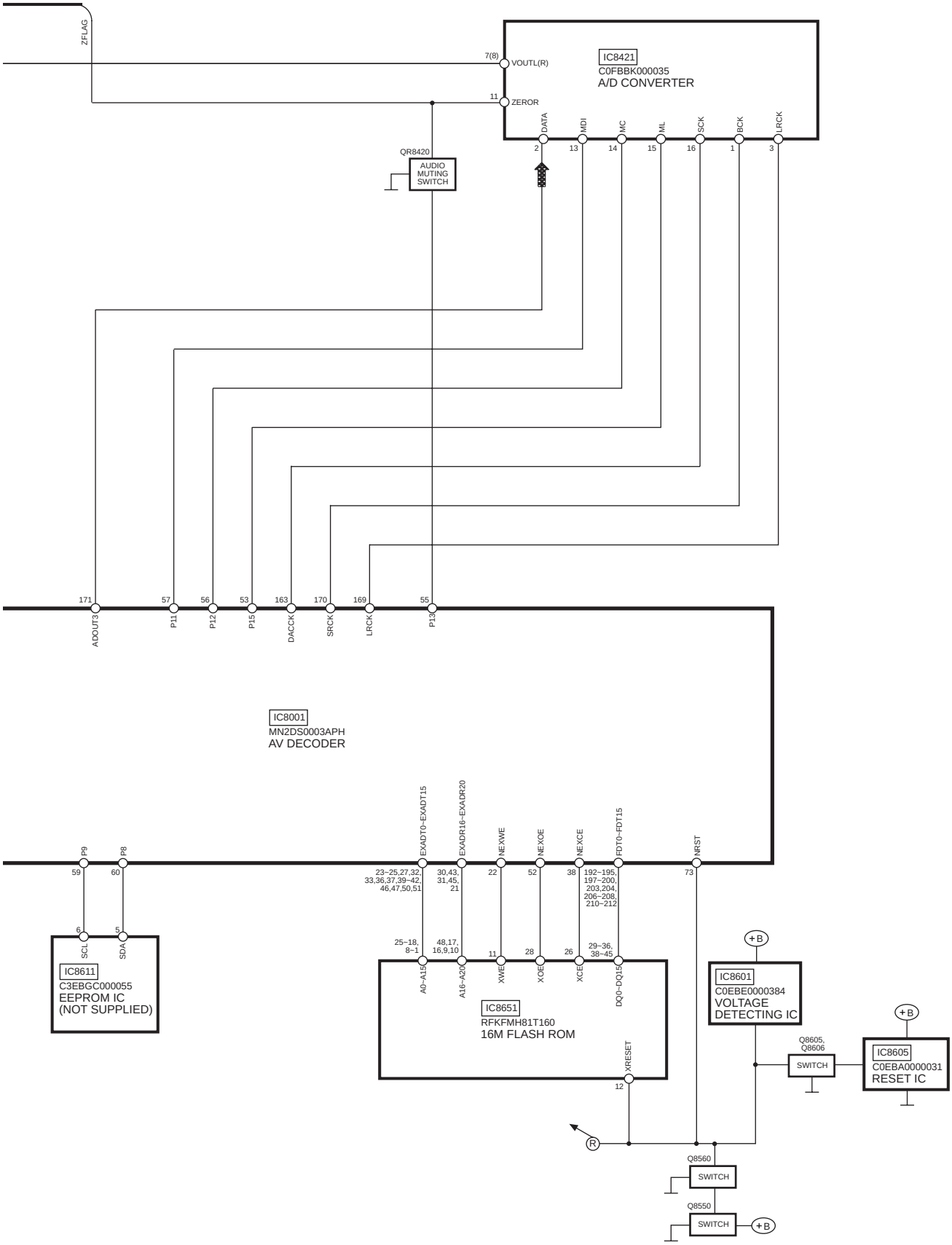
ZFLAG
7(8)
VOUTL(R)
11
ZEROR
IC8421
C0FBBK000035
A/D CONVERTER
DATA
MDI
MC
ML
SCK
BCK
LRCK
2
13
14
15
16
1
3
QR8420
AUDIO MUTING SWITCH
171
57
56
53
163
170
169
55
ADOUT3
P11
P12
P15
DACCK
SRCK
LRCK
P13
IC8001
MN2DS0003APH
AV DECODER
P9
P8
59
60
EXADT0–EXADT15
EXADR16–EXADR20
NEXWE
NEXOE
NEXCE
FDT0–FDT15
NRST
23–25,27,32, 33,36,37,39–42, 46,47,50,51
30,43, 31,45, 21
22
52
38
192–195, 197–200, 203,204, 206–208, 210–212
73
6
5
SCL
SDA
IC8611
C3EBGC000055
EEPROM IC
(NOT SUPPLIED)
25–18, 8–1
48,17, 16,9,10
11
28
26
29–36, 38–45
A0–A15
A16–A20
XWE
XOE
XCE
DQ0–DQ15
IC8651
RFKFMH81T160
16M FLASH ROM
XRESET
12
+B
IC8601
C0EBE0000384
VOLTAGE DETECTING IC
Q8605, Q8606
SWITCH
IC8605
C0EBA0000031
RESET IC
R
Q8560
SWITCH
Q8550
SWITCH
+B

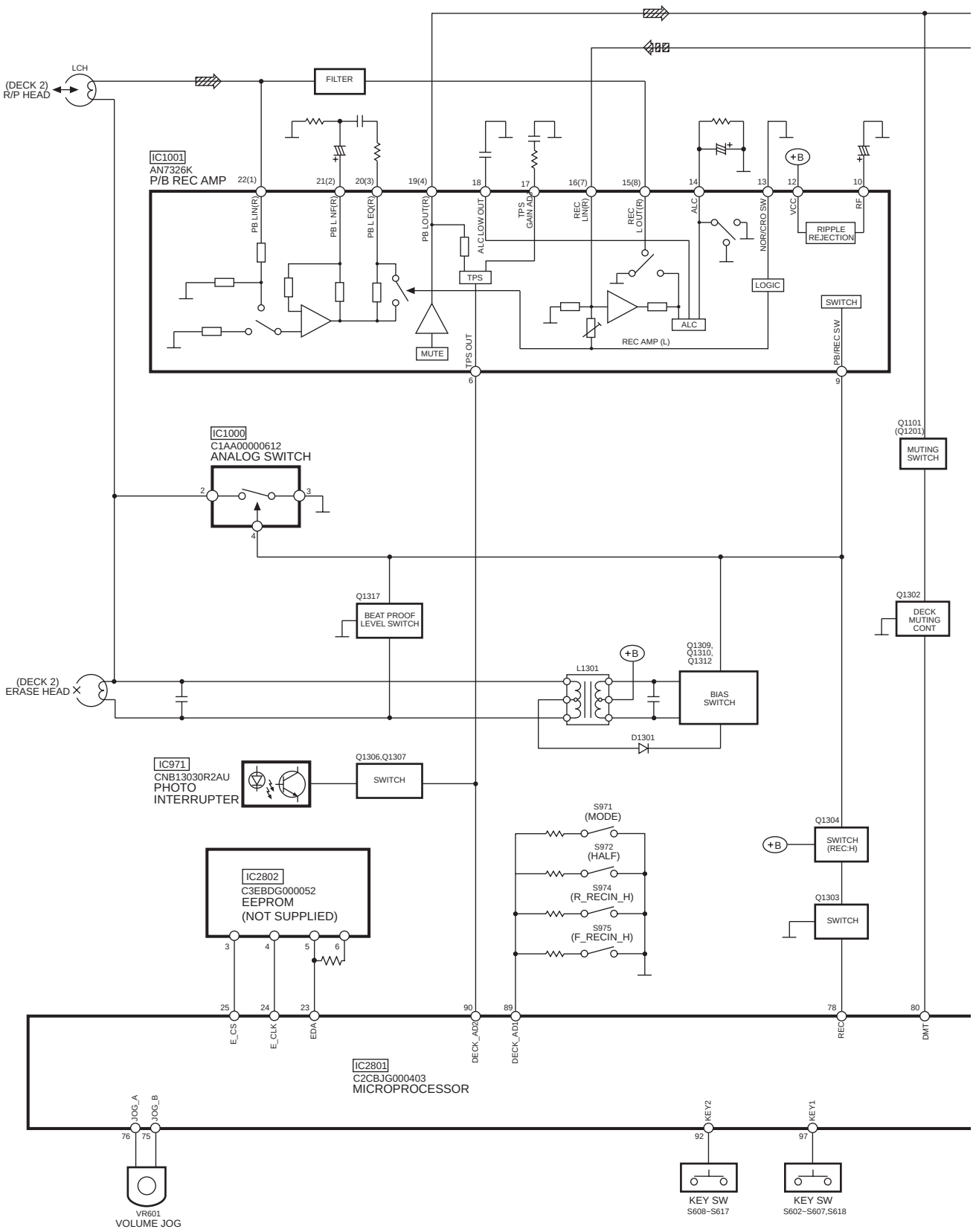
LCH
(DECK 2)
R/P HEAD
FILTER
IC1001
AN7326K
P/B REC AMP
22(1)
21(2)
20(3)
19(4)
18
17
16(7)
15(8)
14
13
12
10
+B
PB LIN(R)
PB L NF(R)
PB L EQ(R)
PB L OUT(R)
ALC LOW OUT
TPS GAIN ADJ
REC LIN(R)
REC L OUT(R)
ALC
NOR/CRO SW
VCC
RF
RIPPLE REJECTION
TPS
LOGIC
SWITCH
ALC
REC AMP (L)
MUTE
TPS OUT
PB/REC SW
6
9
IC1000
C1AA00000612
ANALOG SWITCH
2
3
4
Q1101
(Q1201)
MUTING SWITCH
Q1317
BEAT PROOF LEVEL SWITCH
Q1302
DECK MUTING CONT
(DECK 2)
ERASE HEAD
L1301
+B
Q1309,
Q1310,
Q1312
BIAS SWITCH
D1301
IC971
CNB13030R2AU
PHOTO INTERRUPTER
Q1306,Q1307
SWITCH
S971
(MODE)
S972
(HALF)
S974
(R_RECIN_H)
S975
(F_RECIN_H)
Q1304
SWITCH (REC:H)
Q1303
SWITCH
IC2802
C3EBDG000052
EEPROM
(NOT SUPPLIED)
3
4
5
6
25
24
23
90
89
78
80
E_CS
E_CLK
EDA
DECK_AD2
DECK_AD1
REC
DMT
IC2801
C2CBJG000403
MICROPROCESSOR
JOG_A
JOG_B
76
75
KEY2
KEY1
92
97
VR601
VOLUME JOG
KEY SW
S608~S617
KEY SW
S602~S607,S618

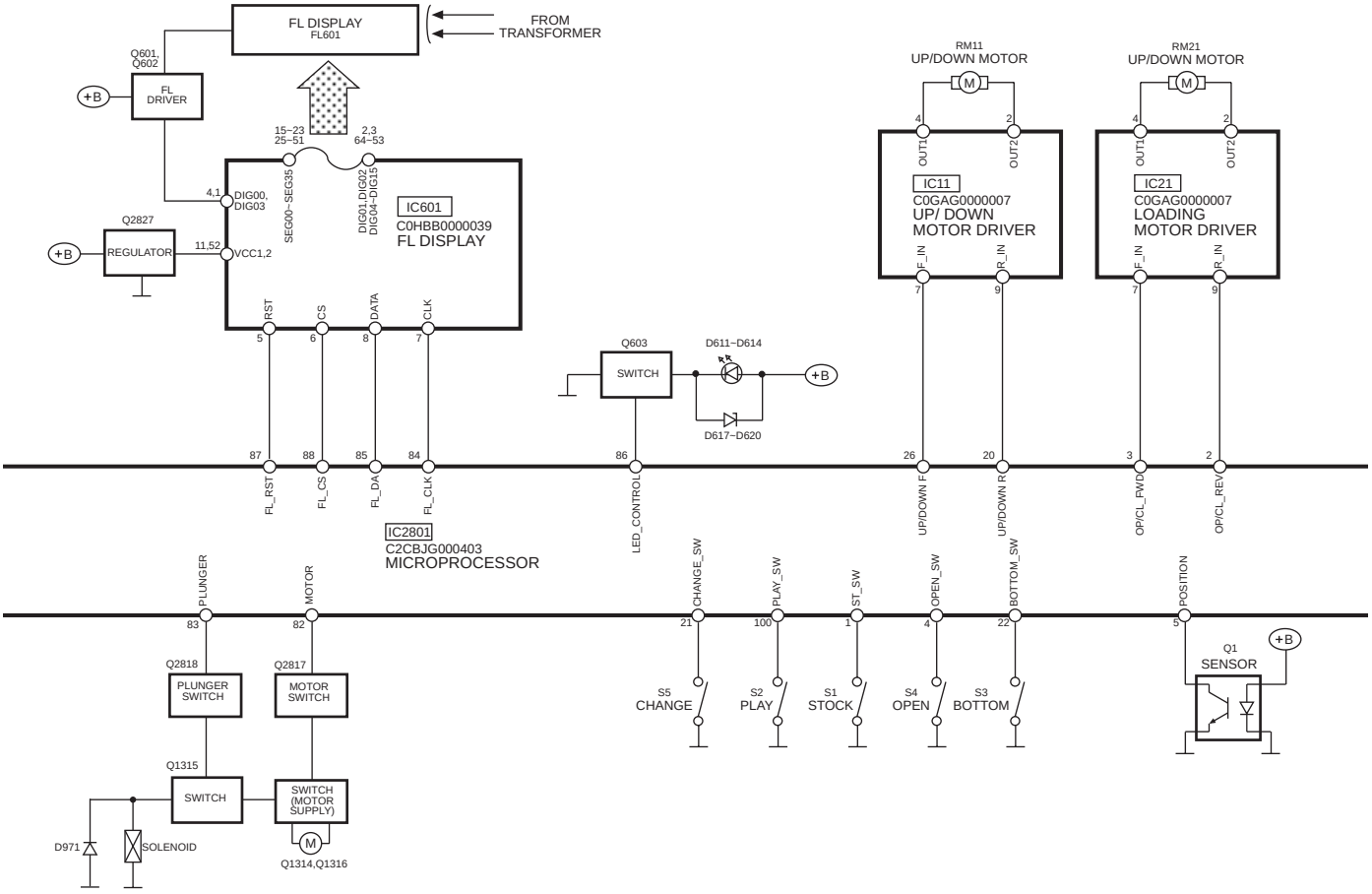
FL DISPLAY
FL601
FROM
TRANSFORMER
Q601,
Q602
FL
DRIVER
+B
15~23
25~51
2,3
64~53
4,1
DIG00,
DIG03
SEG00~SEG35
DIG01,DIG02
DIG04~DIG15
IC601
C0HBB0000039
FL DISPLAY
Q2827
REGULATOR
11,52
VCC1,2
RST
CS
DATA
CLK
5
6
8
7
Q603
SWITCH
D611~D614
D617~D620
RM11
UP/DOWN MOTOR
M
4
2
OUT1
OUT2
IC11
C0GAG0000007
UP/ DOWN
MOTOR DRIVER
F_IN
R_IN
7
9
RM21
UP/DOWN MOTOR
IC21
C0GAG0000007
LOADING
MOTOR DRIVER
87
88
85
84
86
26
20
3
2
FL_RST
FL_CS
FL_DA
FL_CLK
LED_CONTROL
UP/DOWN F
UP/DOWN R
OP/CL_FWD
OP/CL_REV
IC2801
C2CBJG000403
MICROPROCESSOR
PLUNGER
MOTOR
CHANGE_SW
PLAY_SW
ST_SW
OPEN_SW
BOTTOM_SW
POSITION
83
82
21
100
1
4
22
5
Q2818
PLUNGER
SWITCH
Q2817
MOTOR
SWITCH
S5
CHANGE
S2
PLAY
S1
STOCK
S4
OPEN
S3
BOTTOM
Q1
SENSOR
Q1315
SWITCH
SWITCH
(MOTOR
SUPPLY)
D971
SOLENOID
Q1314,Q1316

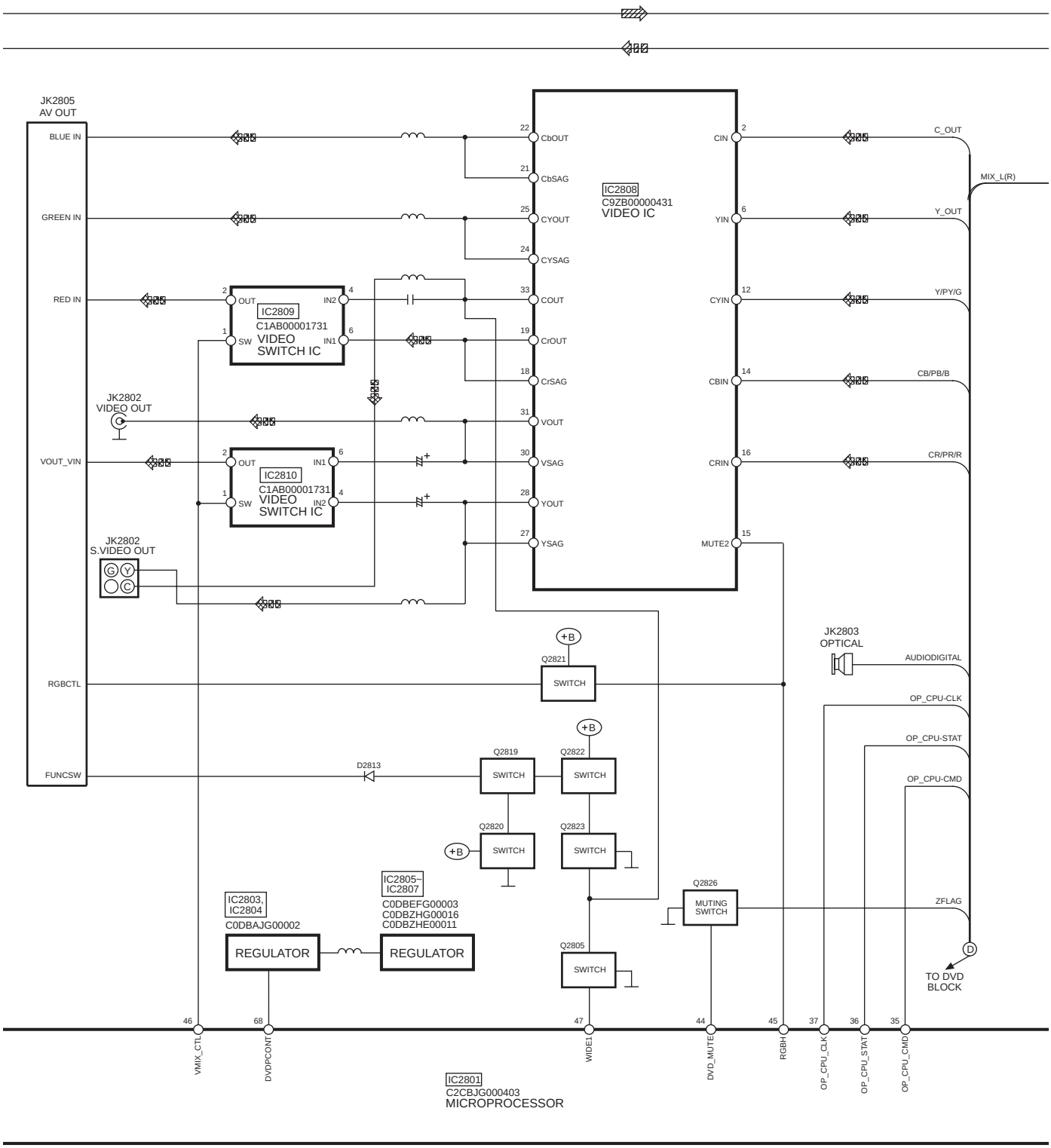
JK2805
AV OUT
BLUE IN
GREEN IN
RED IN
VOUT_VIN
RGBCTL
FUNCSW
IC2808
C9ZB00000431
VIDEO IC
CbOUT
CbSAG
CYOUT
CYSAG
COUT
CrOUT
CrSAG
VOUT
VSAG
YOUT
YSAG
CIN
YIN
CYIN
CBIN
CRIN
MUTE2
C_OUT
MIX_L(R)
Y_OUT
Y/PY/G
CB/PB/B
CR/PR/R
IC2809
C1AB00001731
VIDEO
SWITCH IC
IC2810
C1AB00001731
VIDEO
SWITCH IC
JK2802
VIDEO OUT
JK2802
S.VIDEO OUT
JK2803
OPTICAL
AUDIODIGITAL
OP_CPU-CLK
OP_CPU-STAT
OP_CPU-CMD
ZFLAG
TO DVD
BLOCK
Q2821
Q2819
Q2822
Q2820
Q2823
Q2805
Q2826
SWITCH
MUTING
SWITCH
D2813
+B
IC2803,
IC2804
C0DBAJG00002
REGULATOR
IC2805~
IC2807
C0DBEFG00003
C0DBZHG00016
C0DBZHE00011
REGULATOR
VMIX_CTL
DVDPCONT
WIDE1
DVD_MUTE
RGBH
OP_CPU_CLK
OP_CPU_STAT
OP_CPU_CMD
IC2801
C2CBJG000403
MICROPROCESSOR

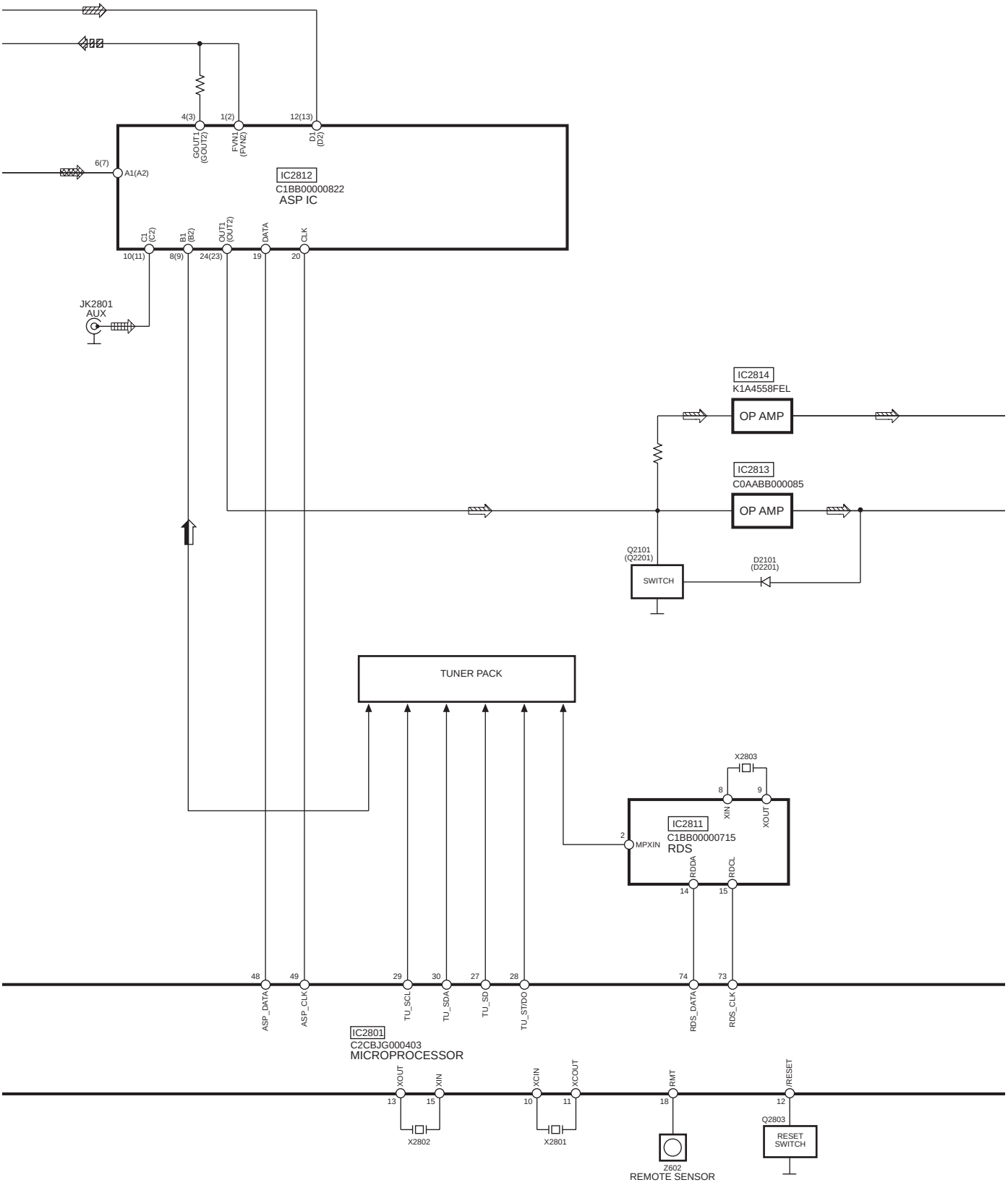
4(3)
1(2)
12(13)
GOUT1 (GOUT2)
FVN1 (FVN2)
D1 (D2)
6(7)
A1(A2)
IC2812
C1BB00000822
ASP IC
C1 (C2)
B1 (B2)
OUT1 (OUT2)
DATA
CLK
10(11)
8(9)
24(23)
19
20
JK2801
AUX
IC2814
K1A4558FEL
OP AMP
IC2813
C0AABB000085
OP AMP
Q2101 (Q2201)
SWITCH
D2101 (D2201)
TUNER PACK
X2803
8
9
XIN
XOUT
IC2811
C1BB00000715
RDS
2
MPXIN
RDDA
RDCL
14
15
48
49
29
30
27
28
74
73
ASP_DATA
ASP_CLK
TU_SCL
TU_SDA
TU_SD
TU_ST/DO
RDS_DATA
RDS_CLK
IC2801
C2CBJG000403
MICROPROCESSOR
XOUT
XIN
XCIN
XCOUT
RMT
RESET
13
15
10
11
18
12
X2802
X2801
Z602
REMOTE SENSOR
Q2803
RESET SWITCH

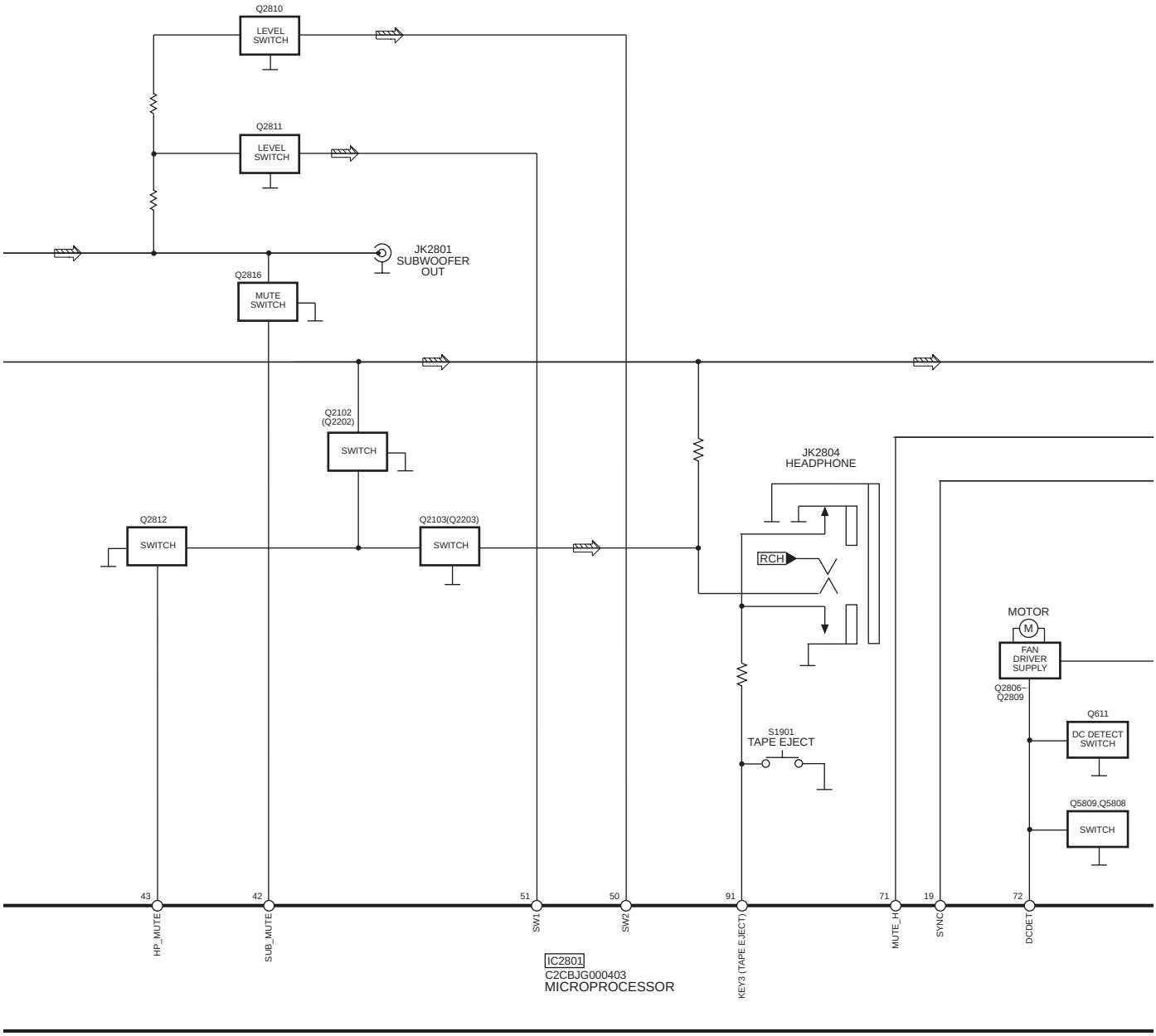
Q2810
LEVEL SWITCH
Q2811
LEVEL SWITCH
JK2801
SUBWOOFER OUT
Q2816
MUTE SWITCH
Q2102 (Q2202)
SWITCH
Q2812
SWITCH
Q2103(Q2203)
SWITCH
JK2804
HEADPHONE
RCH
MOTOR
M
FAN DRIVER SUPPLY
Q2806~ Q2809
Q611
DC DETECT SWITCH
S1901
TAPE EJECT
Q5809,Q5808
SWITCH
43
42
51
50
91
71
19
72
HP_MUTE
SUB_MUTE
SW1
SW2
KEY3 (TAPE EJECT)
MUTE_H
SYNC
DCDET
IC2801
C2CBJG000403
MICROPROCESSOR

SIGNAL LINES

: MAIN SIGNAL LINE
: FM/AM SIGNAL LINE
: CD-DA SIGNAL LINE
: AUX SIGNAL LINE
: TAPE PLAYBACK SIGNAL LINE
: TAPE RECORD SIGNAL LINE
: DVD (AUDIO) SIGNAL LINE
: DVD (VIDEO) SIGNAL LINE

( ) Indicates Pin No. of Right Channel Note : Signal Lines are applicable to the Left Channel only.

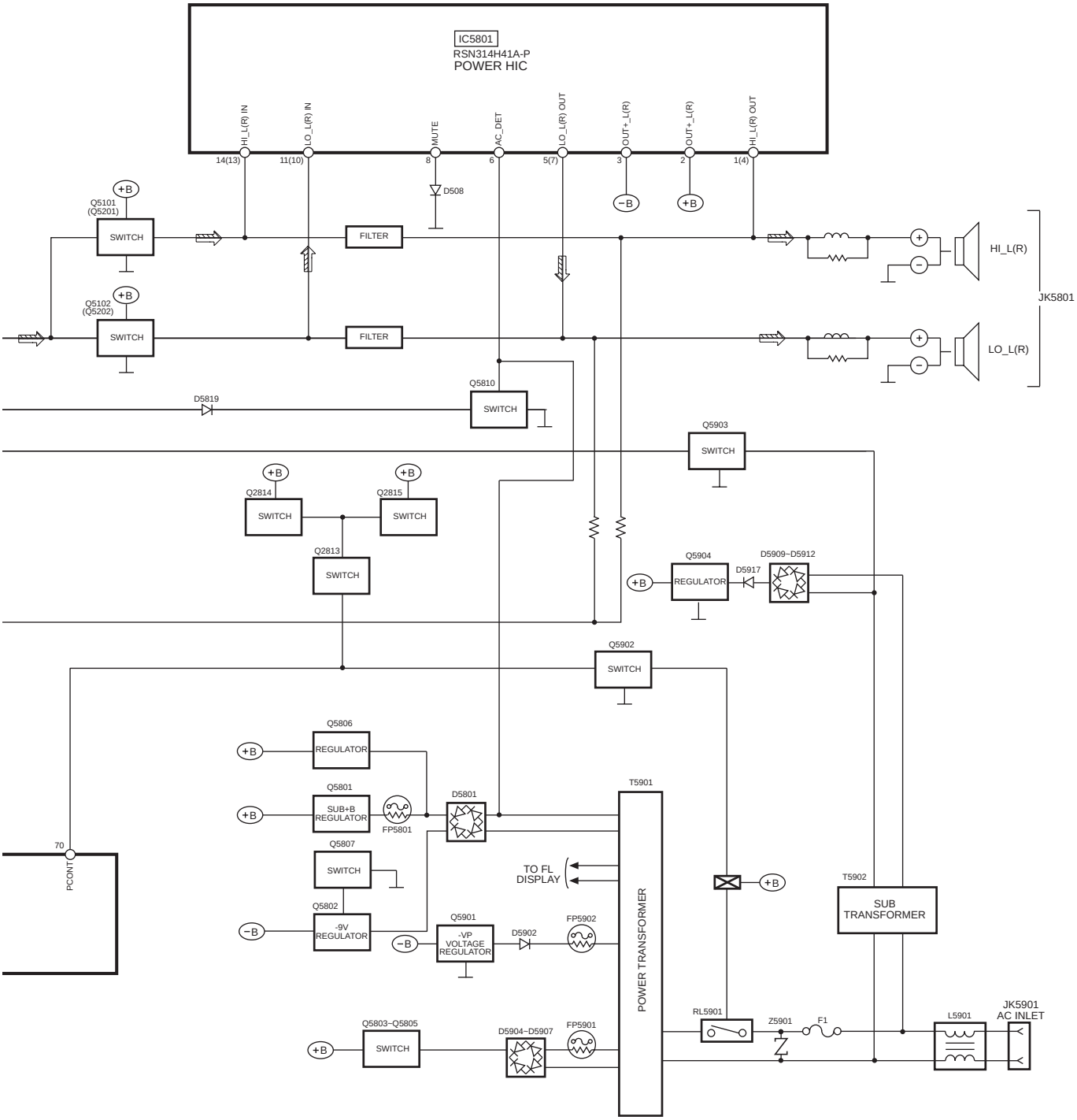

17 Schematic Diagram

(All schematic diagrams may be modified at any time with the development of new technology.)

Notes:

S1	Stock Switch
S2	Play Switch
S3	Bottom Switch
S4	Open Switch
S5	Change Switch
S602	ADV SUR Switch
S603	OPEN CLOSE Switch
S604	DISC 5 Switch
S605	DISC 4 Switch
S606	DISC 3 Switch
S607	DISC 2 Switch
S608	Power Switch
S609	Disc Check Switch
S610	Disc_change Switch
S611	Re_master Switch
S613	Tuner/ Aux Switch
S614	DVD/ CD Switch
S615	Stop Switch
S616	Tape Switch
S617	Rec Switch
S618	Disc 1 Switch
S971	Mode Switch
S972	Half Switch
S973	ATS/CR02 Switch
S974	Recinh_r Switch
S975	Recinh_f Switch
S1901	Tape Eject Switch

- The voltage value and waveforms are the reference voltage of this unit measured by DC electronic voltmeter (high impedance) and oscilloscope on the basis of chassis. Accordingly, there may arise some error in voltage values and waveforms depending upon the internal impedance of the tester or the measuring unit.

No mark	...Playback	< >	...FM
(( ))	...CD	( )	...AM

- **Importance safety notice:**

  Components identified by ⚠ mark have special characteristics important for safety. Furthermore, special parts which have purposes of fire-retardant (resistors), high-quality sound (capacitors), low-noise (resistors), etc. are used. When replacing any of components, be sure to use only manufacturer's specified parts shown in the parts list.

Caution!

IC, LSI and VLSI are sensitive to static electricity.

Secondary trouble can be prevented by taking care during repair.

- Cover the parts boxes made of plastics with aluminium foil.
- Put a conductive mat on the work table.
- Ground the soldering iron.
- Do not touch the pins of IC, LSI or VLSI with fingers directly.

17.1. Optical Pickup Circuit

SCHEMATIC DIAGRAM - 1

OPTICAL PICKUP UNIT CIRCUIT

: +B SIGNAL LINE

: CD-DA SIGNAL LINE

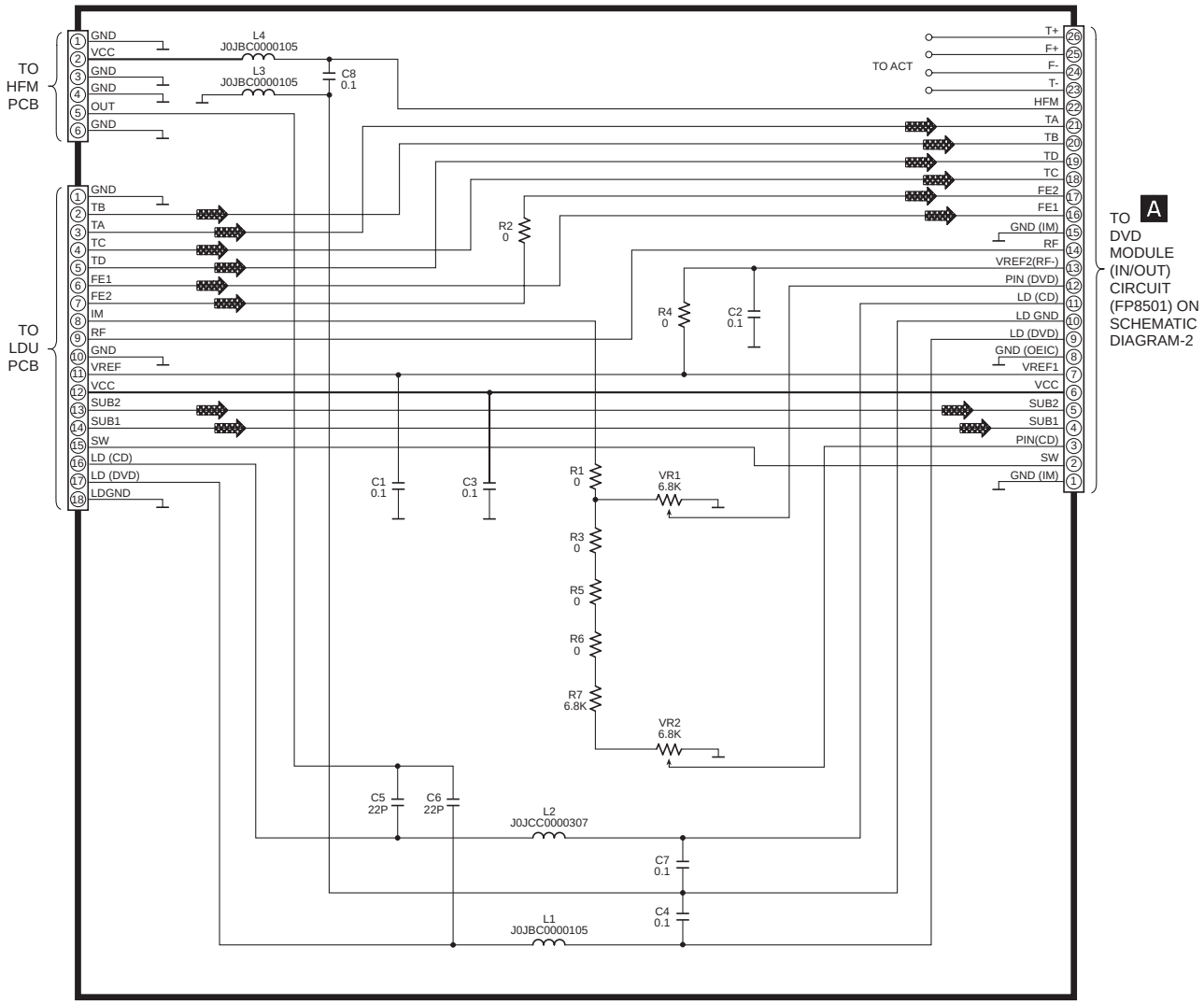

17.2. (A) DVD Module Circuit

SCHEMATIC DIAGRAM - 2

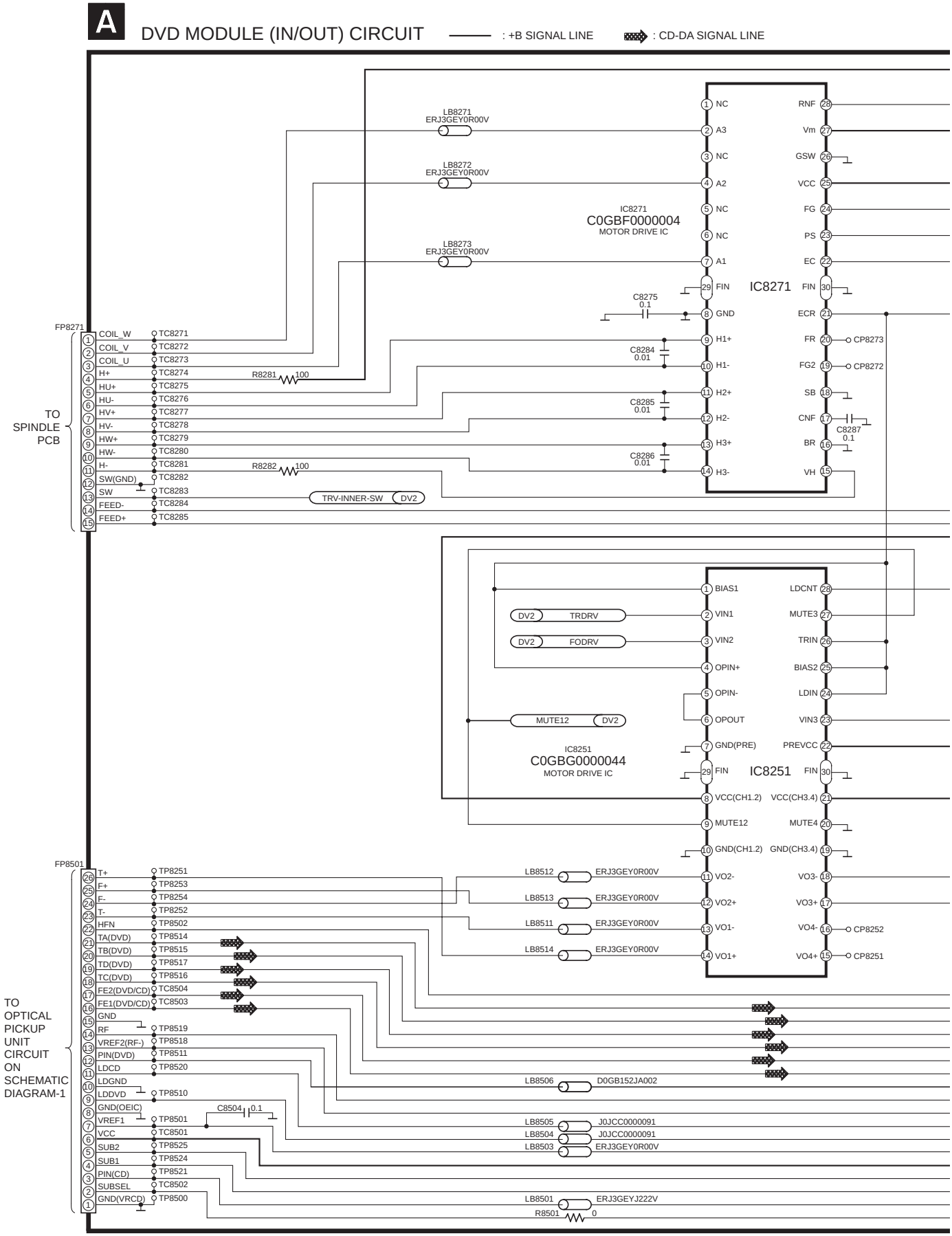

SCHEMATIC DIAGRAM - 3

A DVD MODULE (IN/OUT) CIRCUIT

: +B SIGNAL LINE : CD-DA SIGNAL LINE

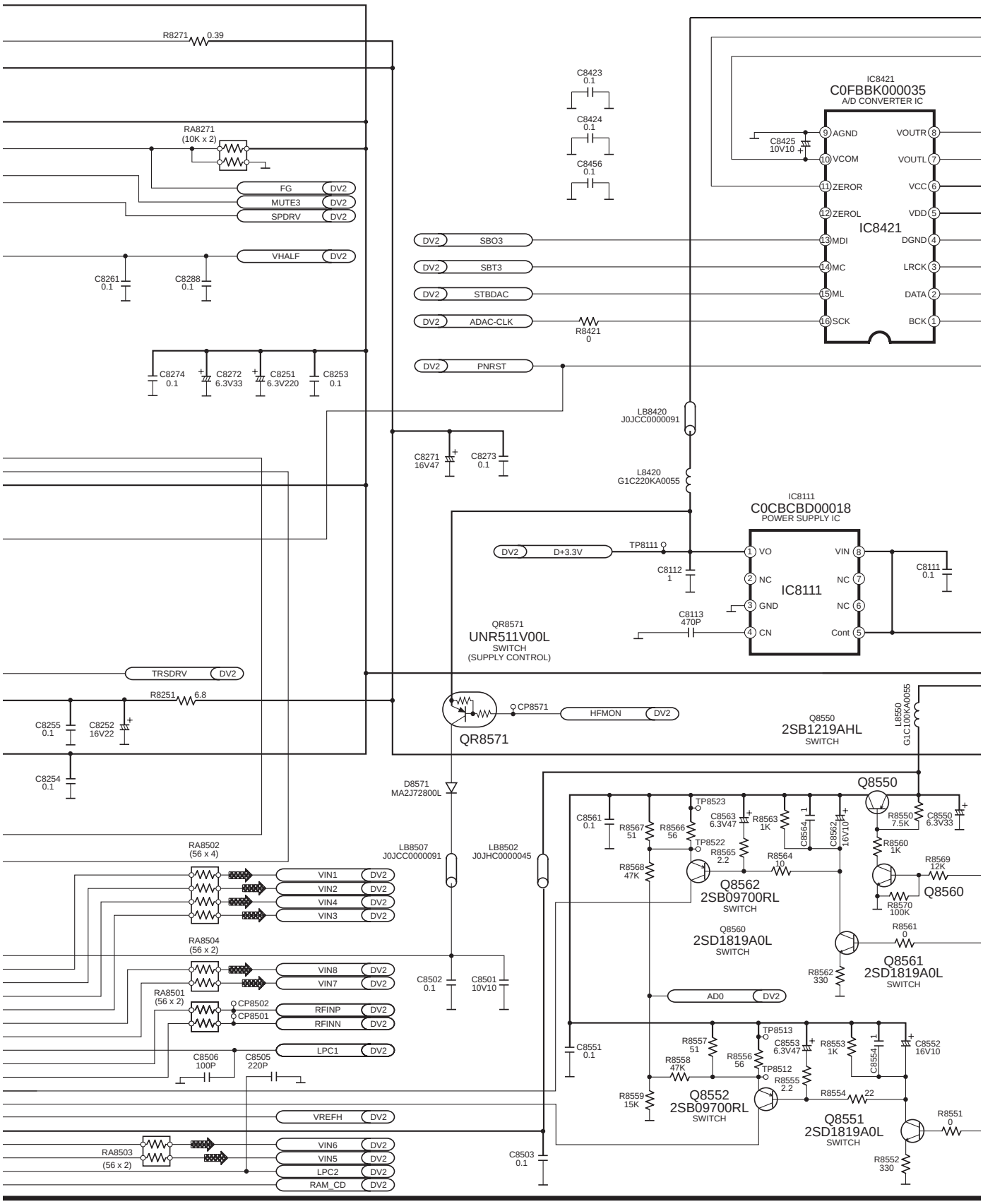

SCHEMATIC DIAGRAM - 4

A DVD MODULE (IN/OUT) CIRCUIT

: MAIN SIGNAL LINE
: +B SIGNAL LINE
: DVD AUDIO SIGNAL LINE
: DVD VIDEO SIGNAL LINE

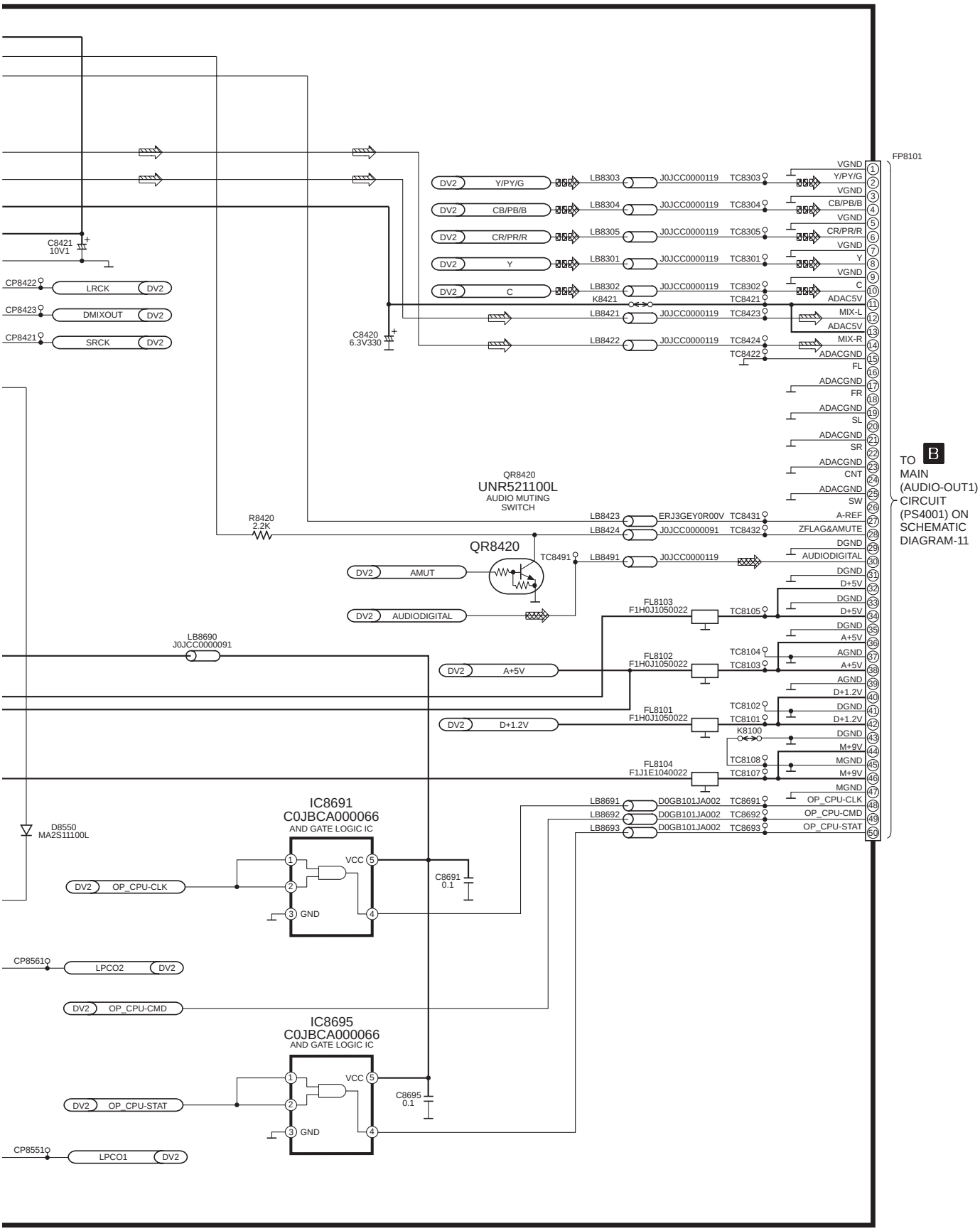

SCHEMATIC DIAGRAM - 5

A DVD MODULE (DV2) CIRCUIT

: +B SIGNAL LINE

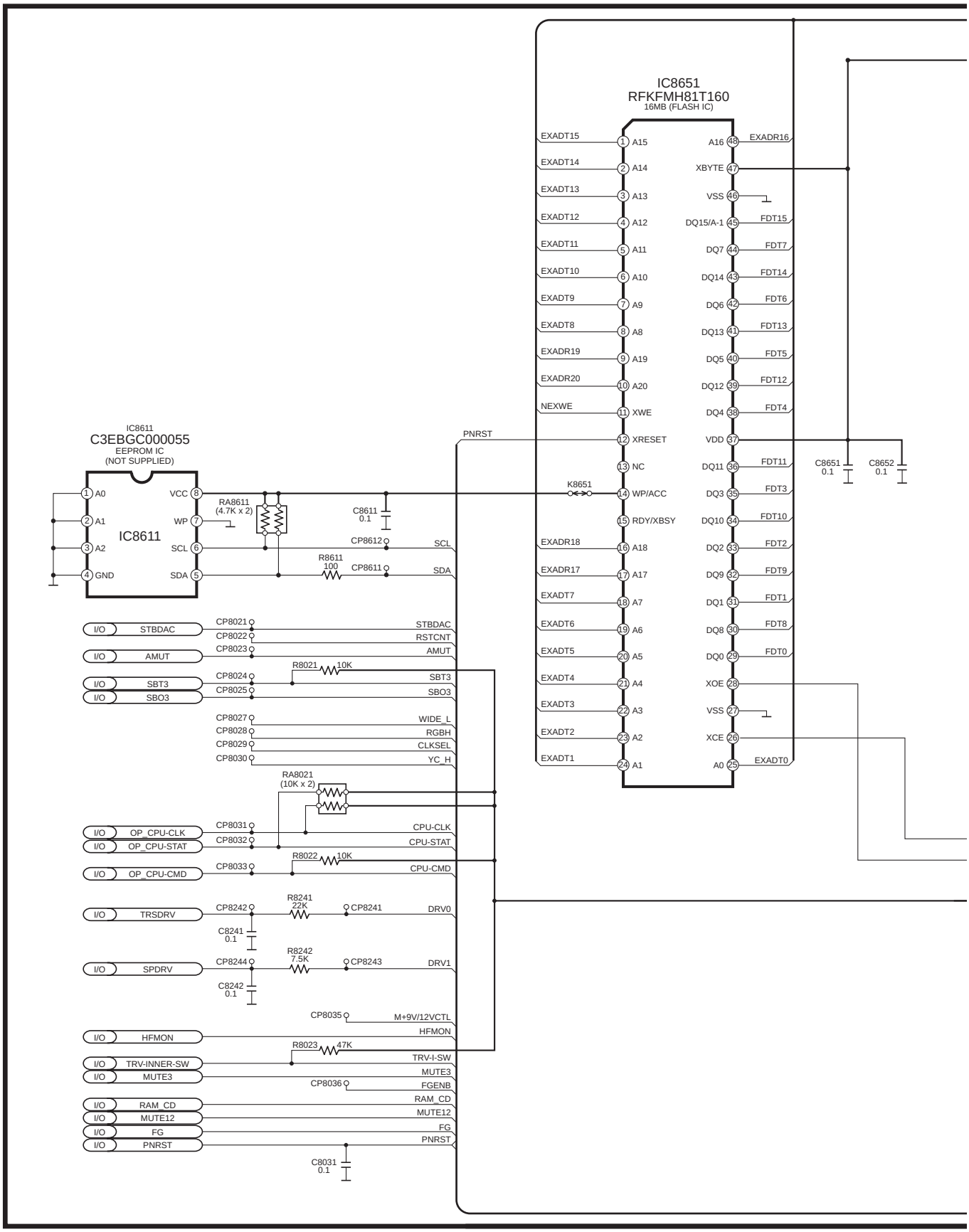

SCHEMATIC DIAGRAM - 6

A DVD MODULE (DV2) CIRCUIT

: +B SIGNAL LINE

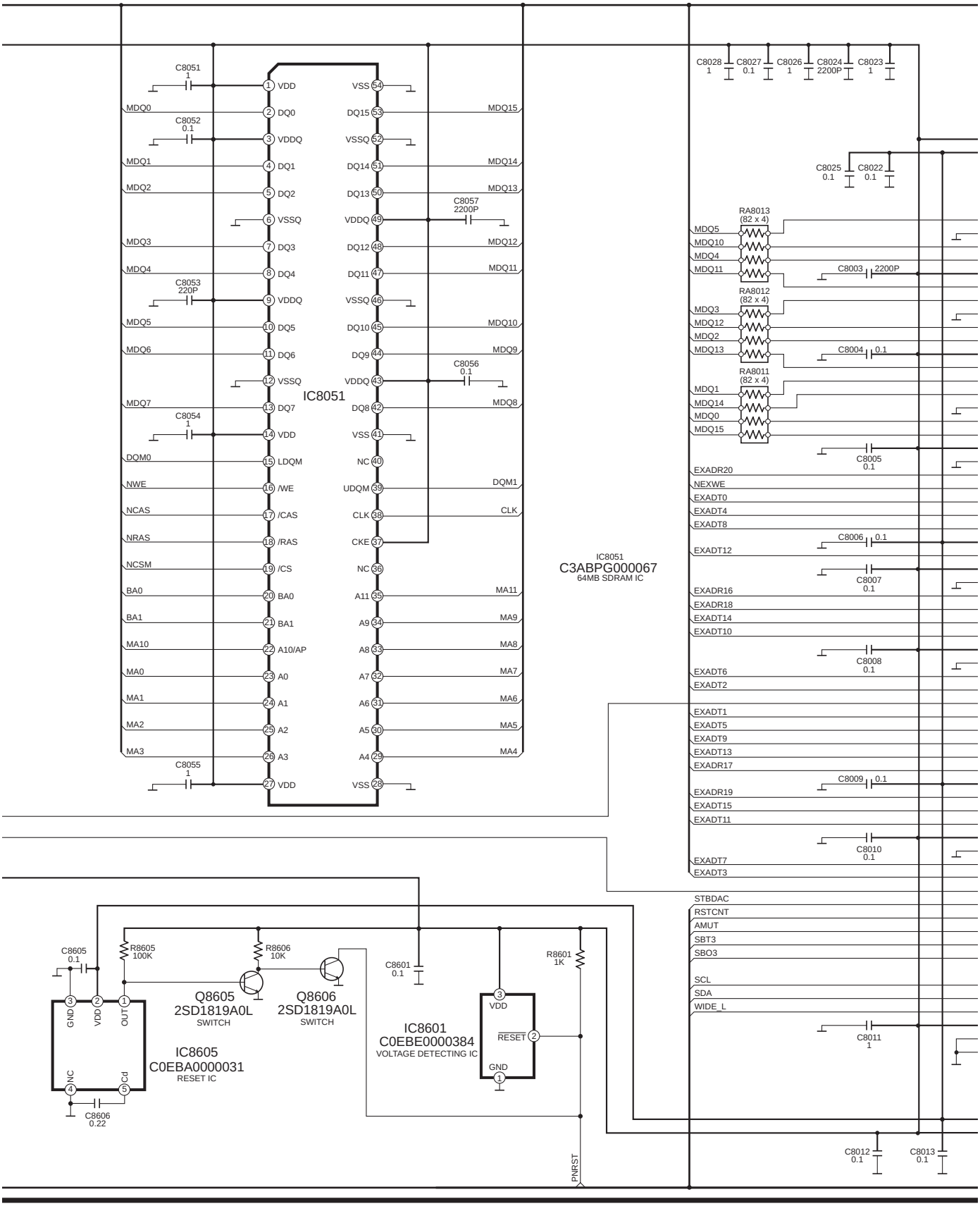

SCHEMATIC DIAGRAM - 7

A DVD MODULE (DV2) CIRCUIT

: +B SIGNAL LINE

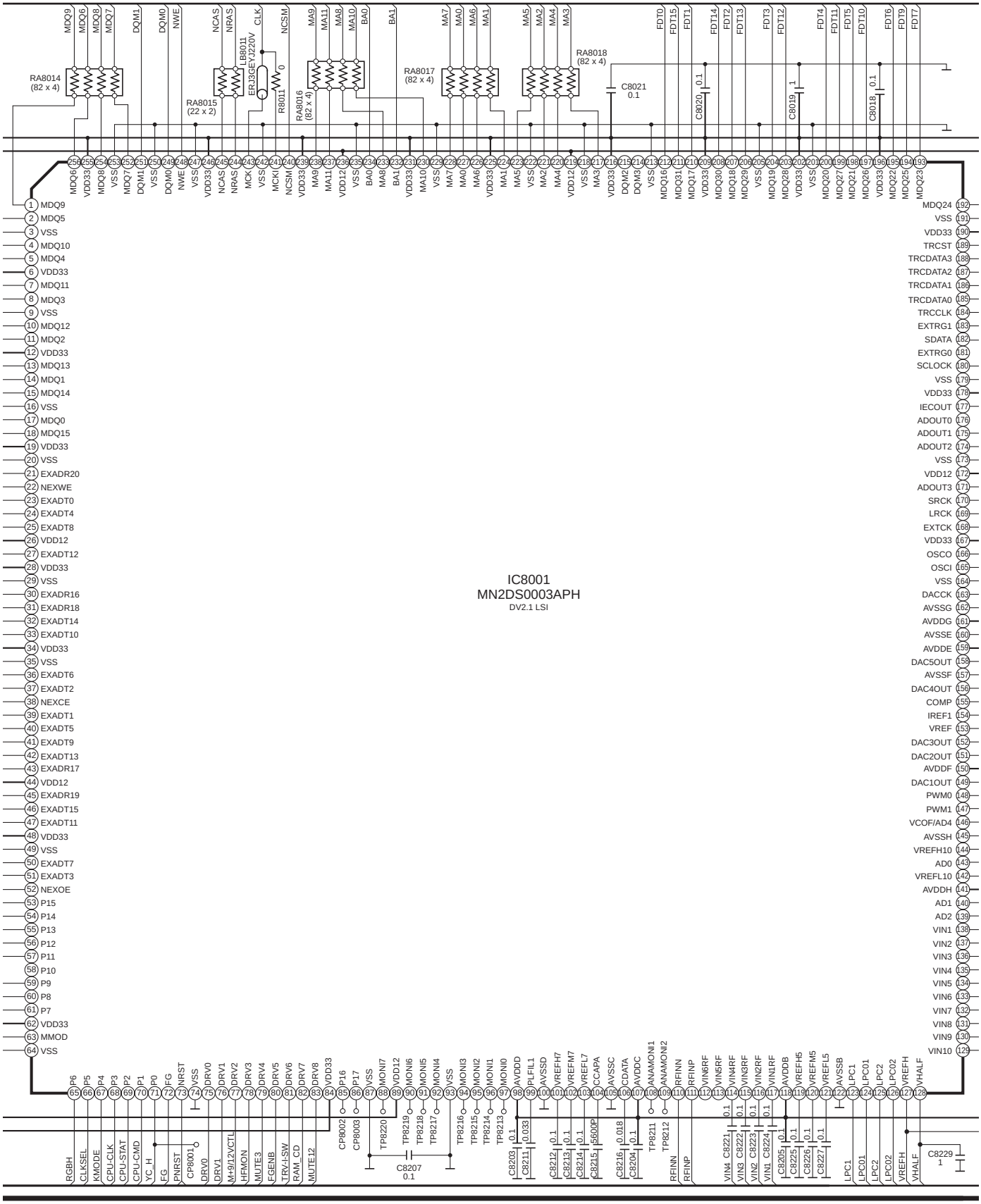

SCHEMATIC DIAGRAM - 8

A DVD MODULE (DV2) CIRCUIT

: CD-DA SIGNAL LINE
: +B SIGNAL LINE
: DVD VIDEO SIGNAL LINE
: DVD AUDIO SIGNAL LINE

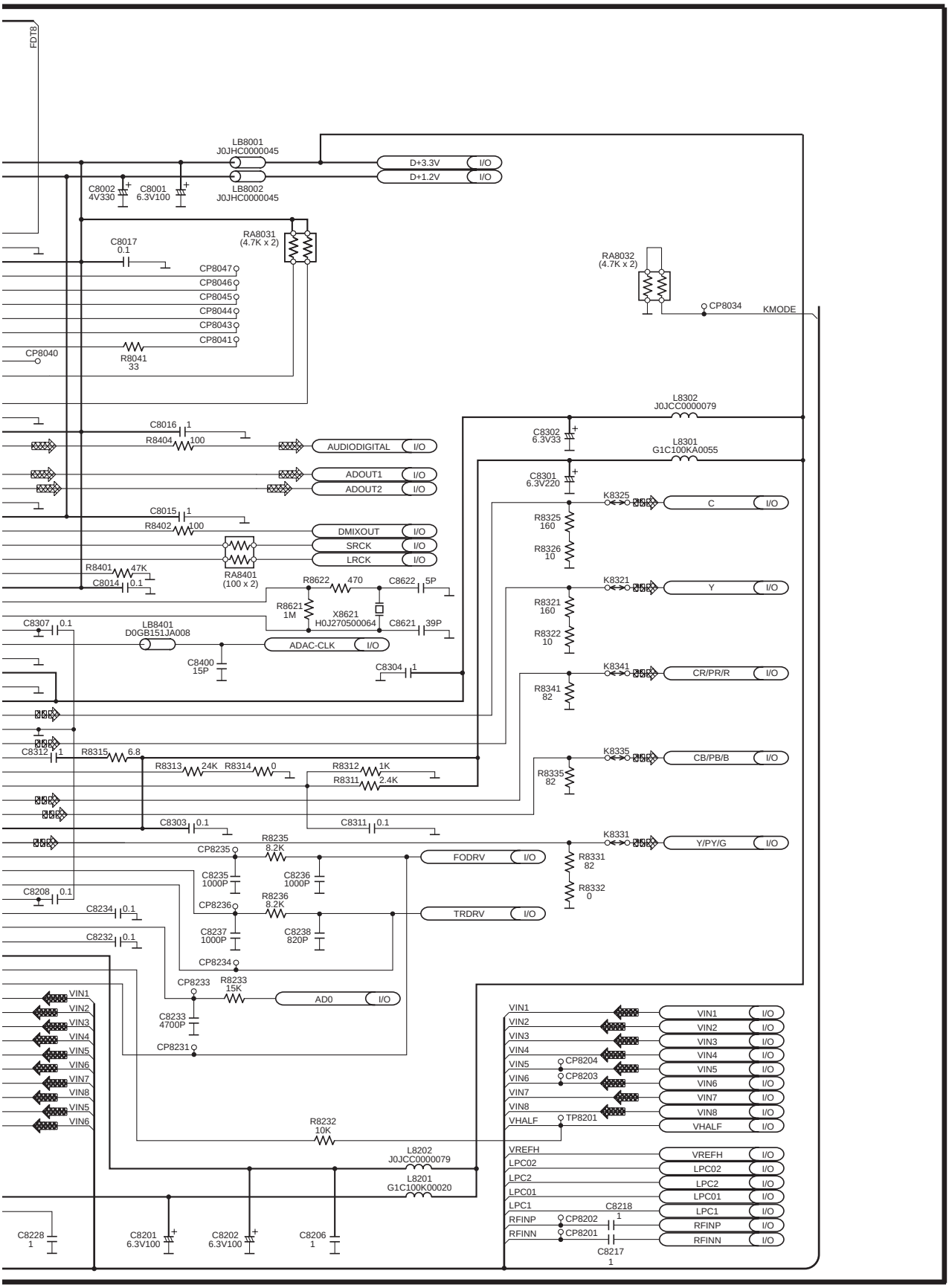

17.3. (B) Main Circuit

SCHEMATIC DIAGRAM-9

B MAIN CIRCUIT

: +B SIGNAL LINE

: DVD (VIDEO) SIGNAL LINE
: AUX SIGNAL LINE
: FM/AM SIGNAL LINE
: MAIN SIGNAL LINE

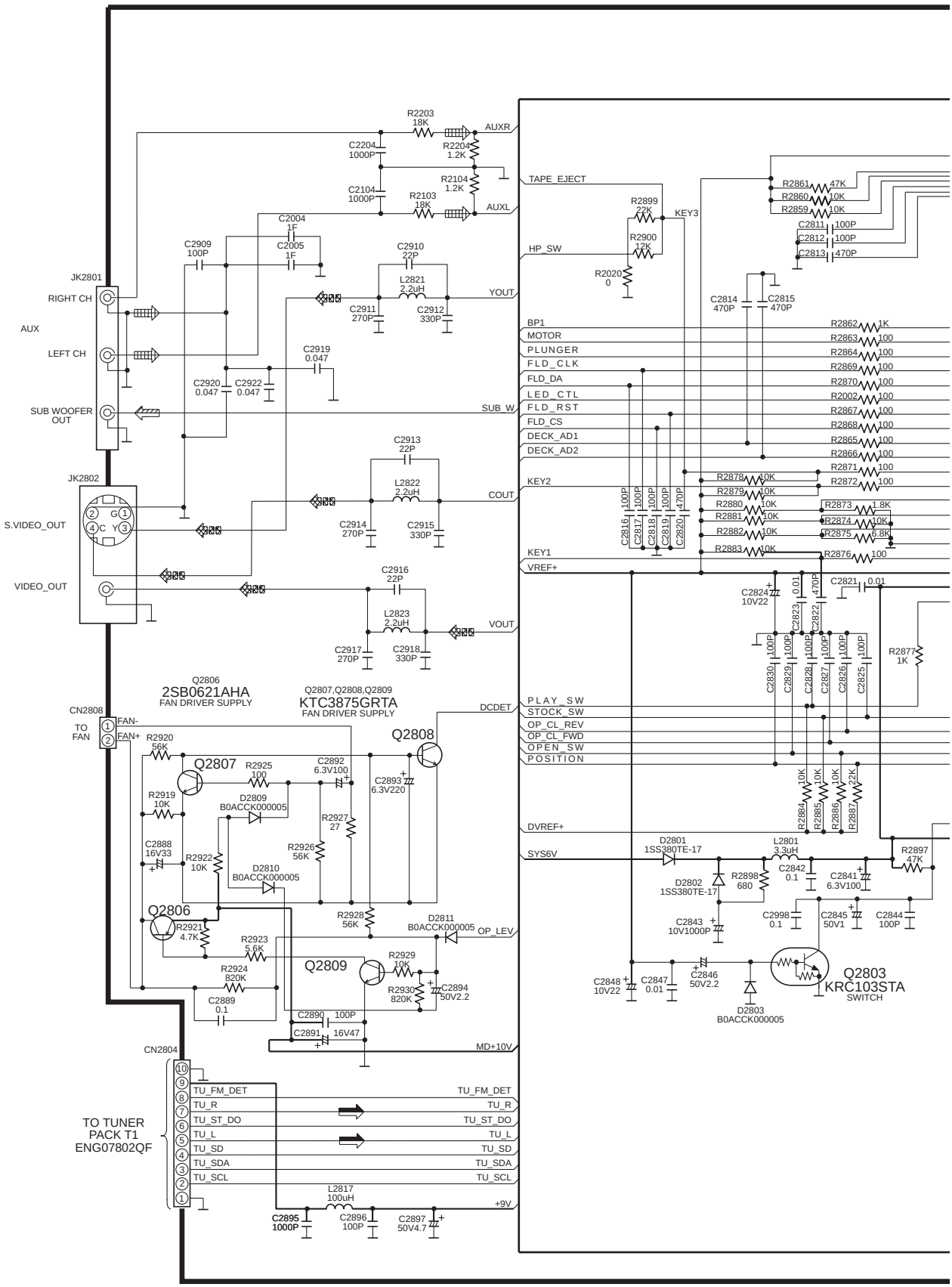

SCHEMATIC DIAGRAM-10

B MAIN CIRCUIT

——— : +B SIGNAL LINE : DVD (VIDEO) SIGNAL LINE

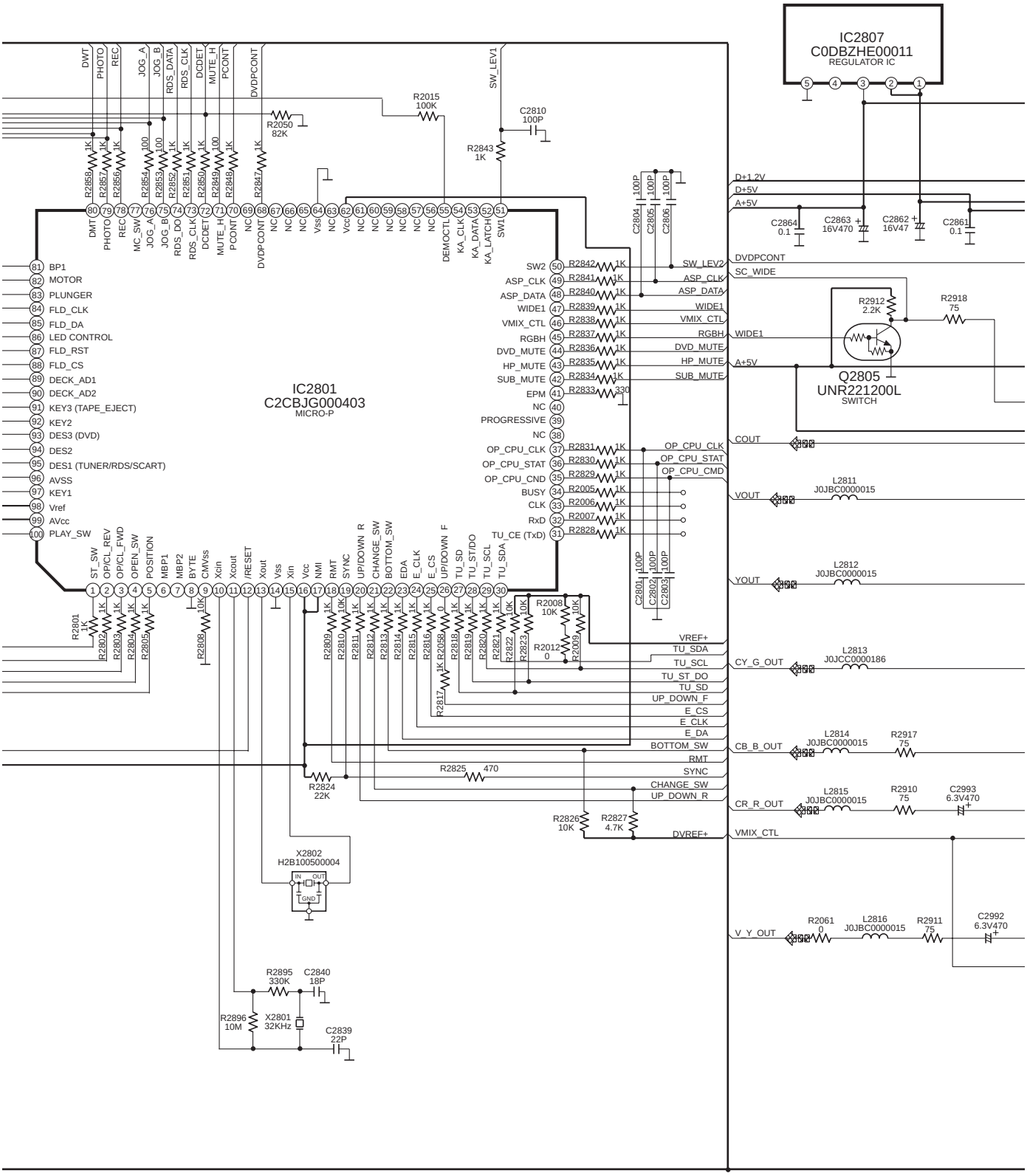

SCHEMATIC DIAGRAM-11

B MAIN CIRCUIT

- - - : - B SIGNAL LINE
——— : +B SIGNAL LINE
: DVD (VIDEO) SIGNAL LINE
: MAIN SIGNAL LINE

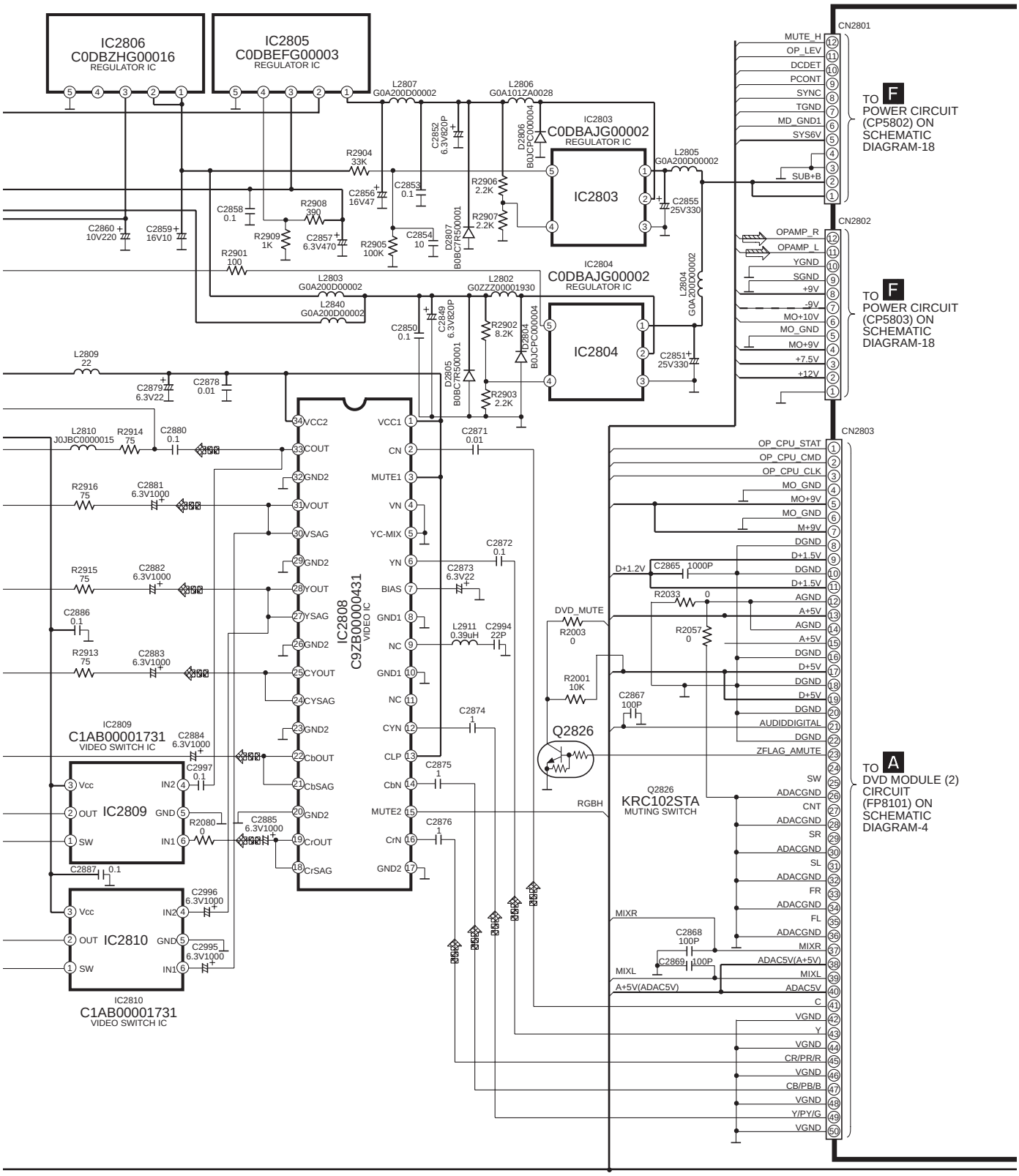

SCHEMATIC DIAGRAM-12

B MAIN CIRCUIT

: MAIN SIGNAL LINE
: +B SIGNAL LINE
: TAPE PLAYBACK SIGNAL LINE
: TAPE RECORD SIGNAL LINE
: FM/AM SIGNAL LINE
: AUX SIGNAL LINE

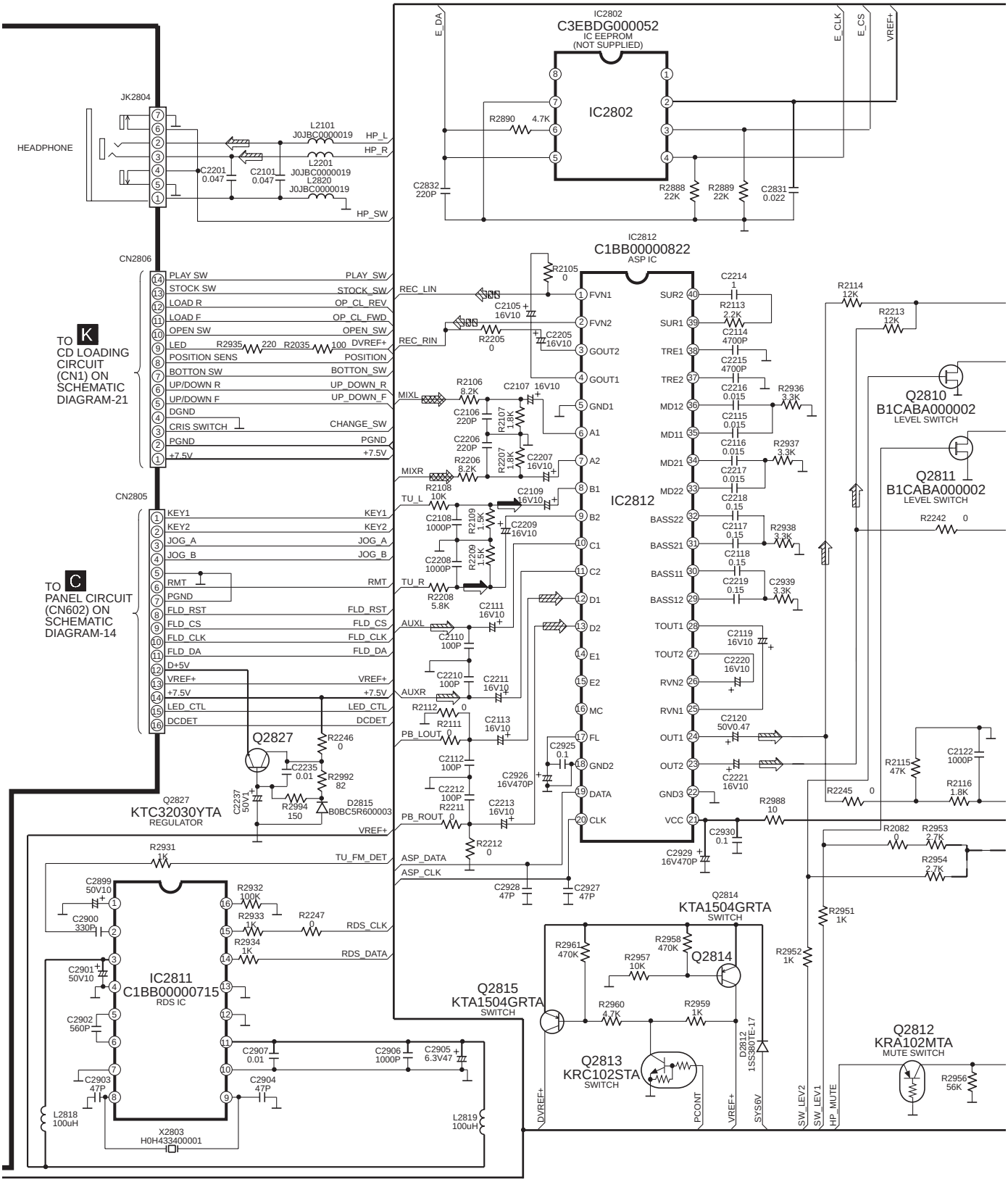

SCHEMATIC DIAGRAM-13

B MAIN CIRCUIT

: MAIN SIGNAL LINE
: +B SIGNAL LINE
: +B SIGNAL LINE
: TAPE PLAYBACK SIGNAL LINE
: TAPE RECORD SIGNAL LINE
: DVD (AUDIO) SIGNAL LINE
: DVD (VIDEO) SIGNAL LINE

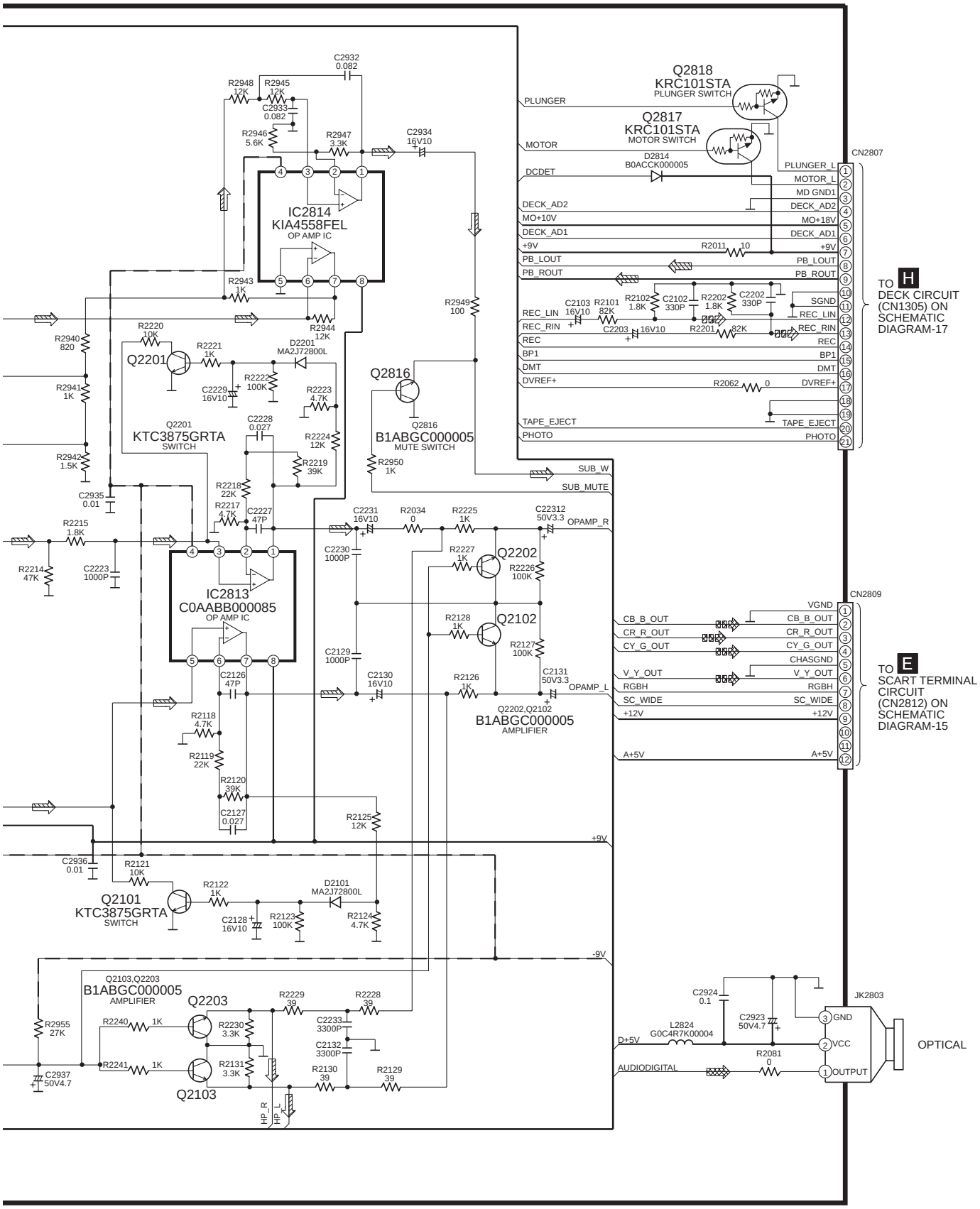

17.4. (C) Panel Circuit & (E) Scart Circuit

SCHEMATIC DIAGRAM-14

C PANEL CIRCUIT

– – – : -B SIGNAL LINE

——— : +B SIGNAL LINE

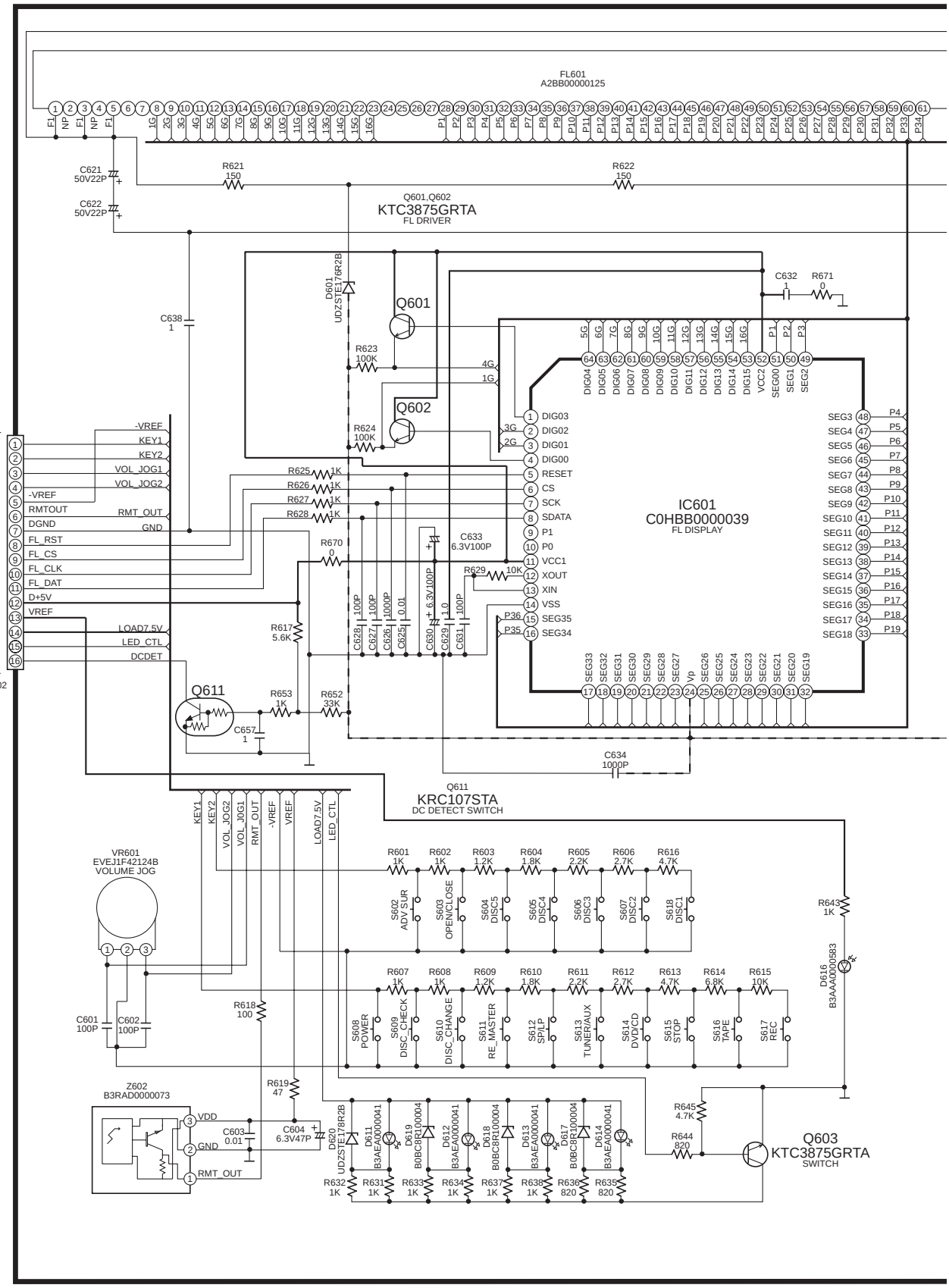

SCHEMATIC DIAGRAM-15

C PANEL CIRCUIT

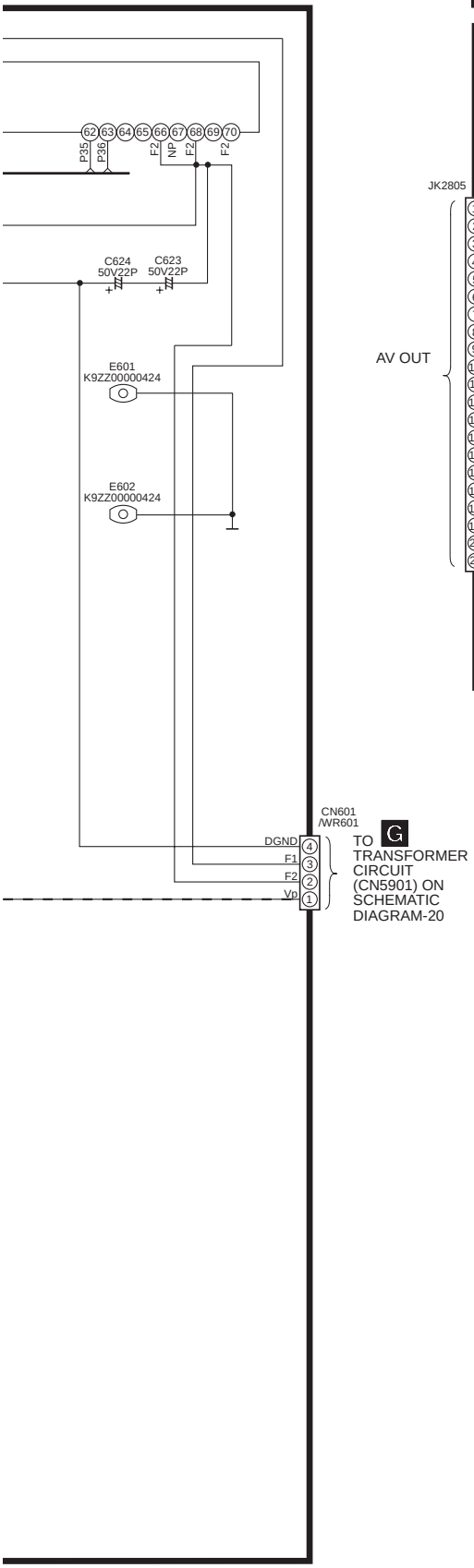

E SCART CIRCUIT

- - - : - B SIGNAL LINE
——— : +B SIGNAL LINE
: DVD (VIDEO) SIGNAL LINE

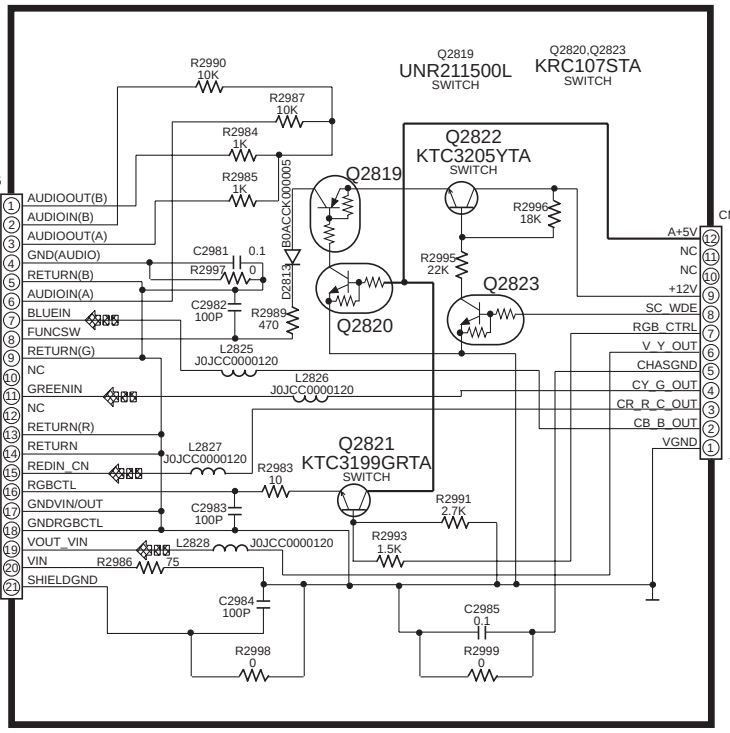

17.5. (H) Deck Circuit, (I) Tape Eject Circuit & (J) Deck Mechanism Circuit

SCHEMATIC DIAGRAM-16

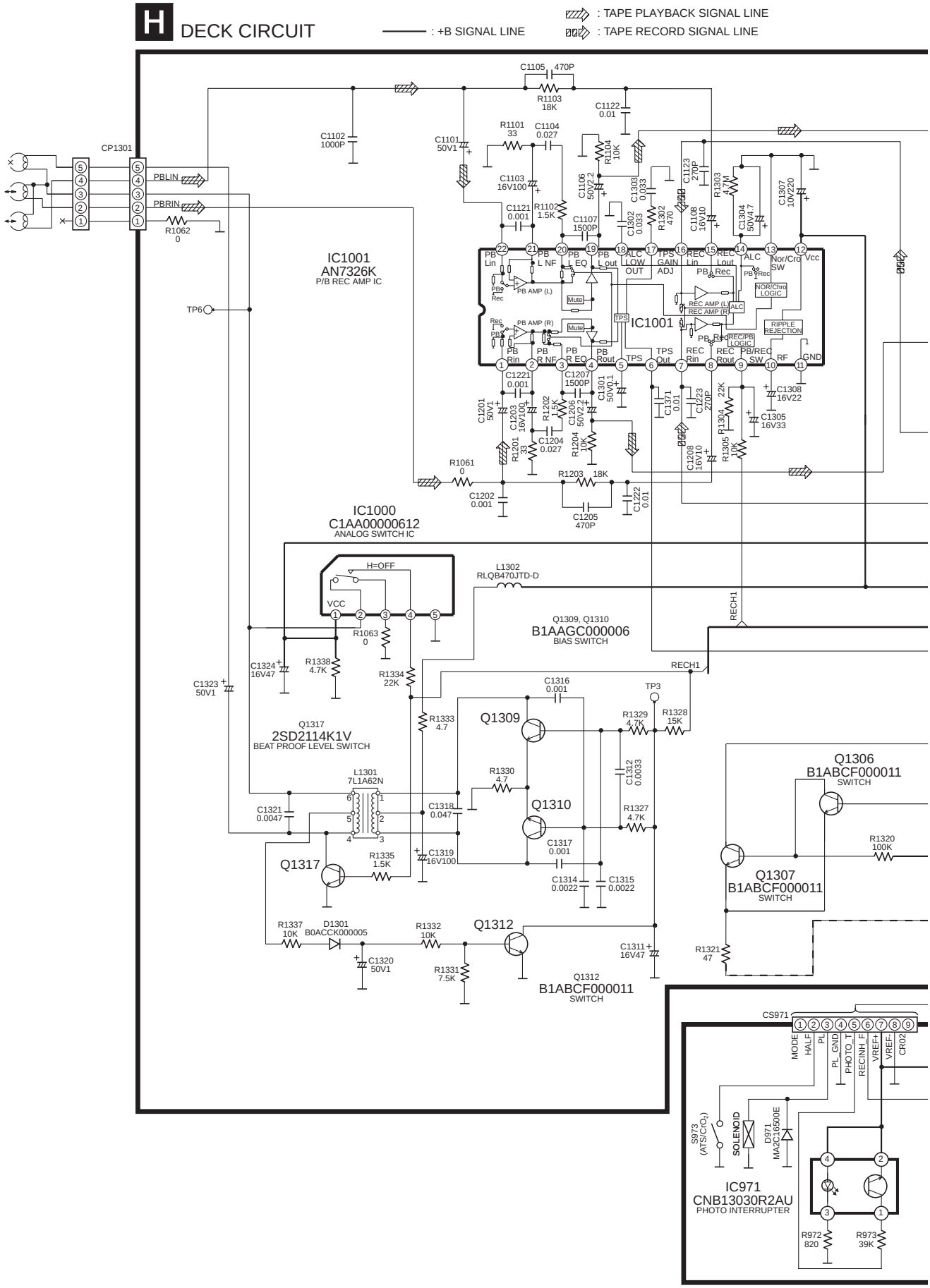

SCHEMATIC DIAGRAM-17

H DECK CIRCUIT

: +B SIGNAL LINE

: TAPE PLAYBACK SIGNAL LINE

: TAPE RECORD SIGNAL LINE

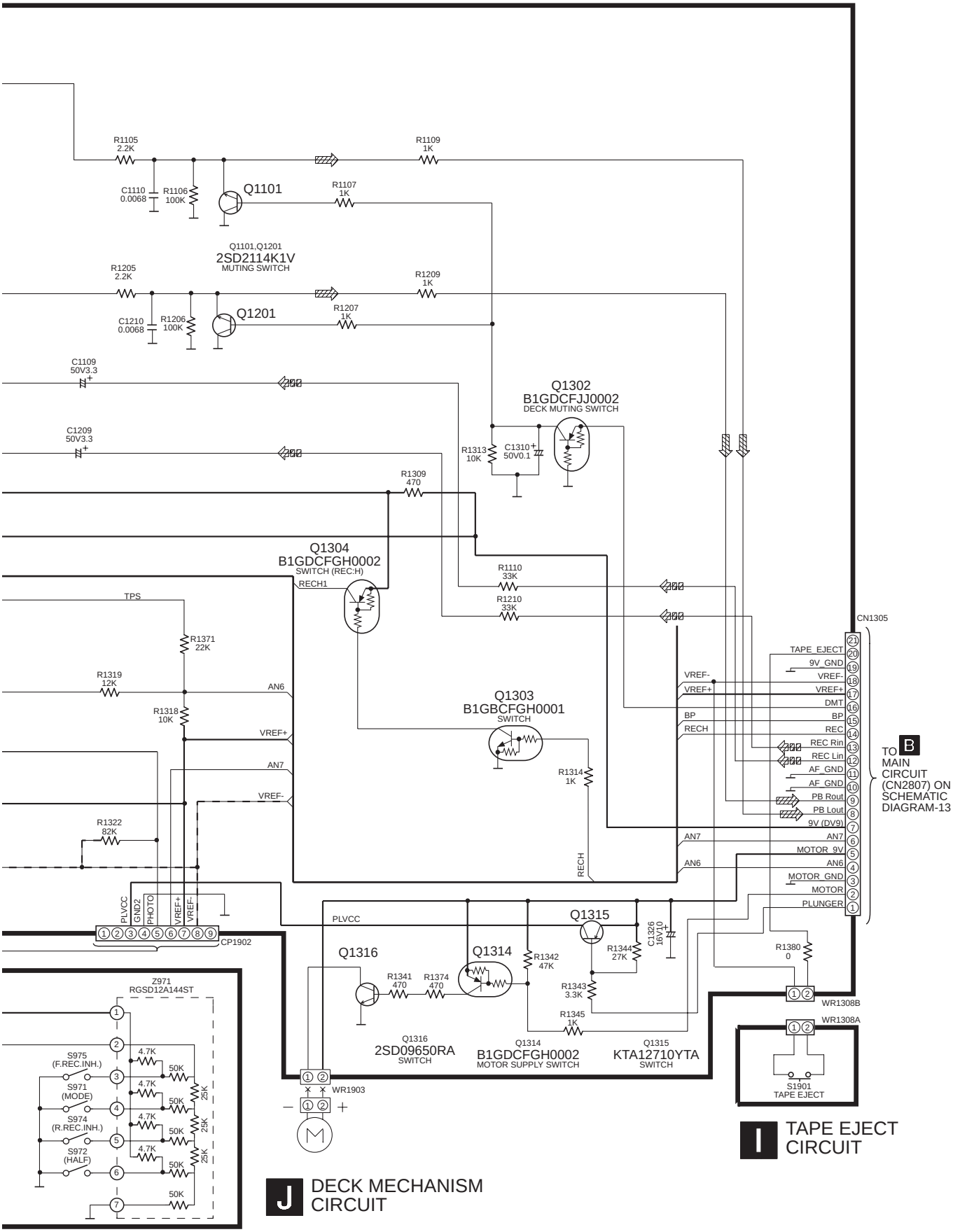

I TAPE EJECT CIRCUIT

J DECK MECHANISM CIRCUIT

17.6. (F) Power Circuit

SCHEMATIC DIAGRAM-18

F POWER CIRCUIT

- - - : -B SIGNAL LINE

——— : +B SIGNAL LINE

⇨ : MAIN SIGNAL LINE

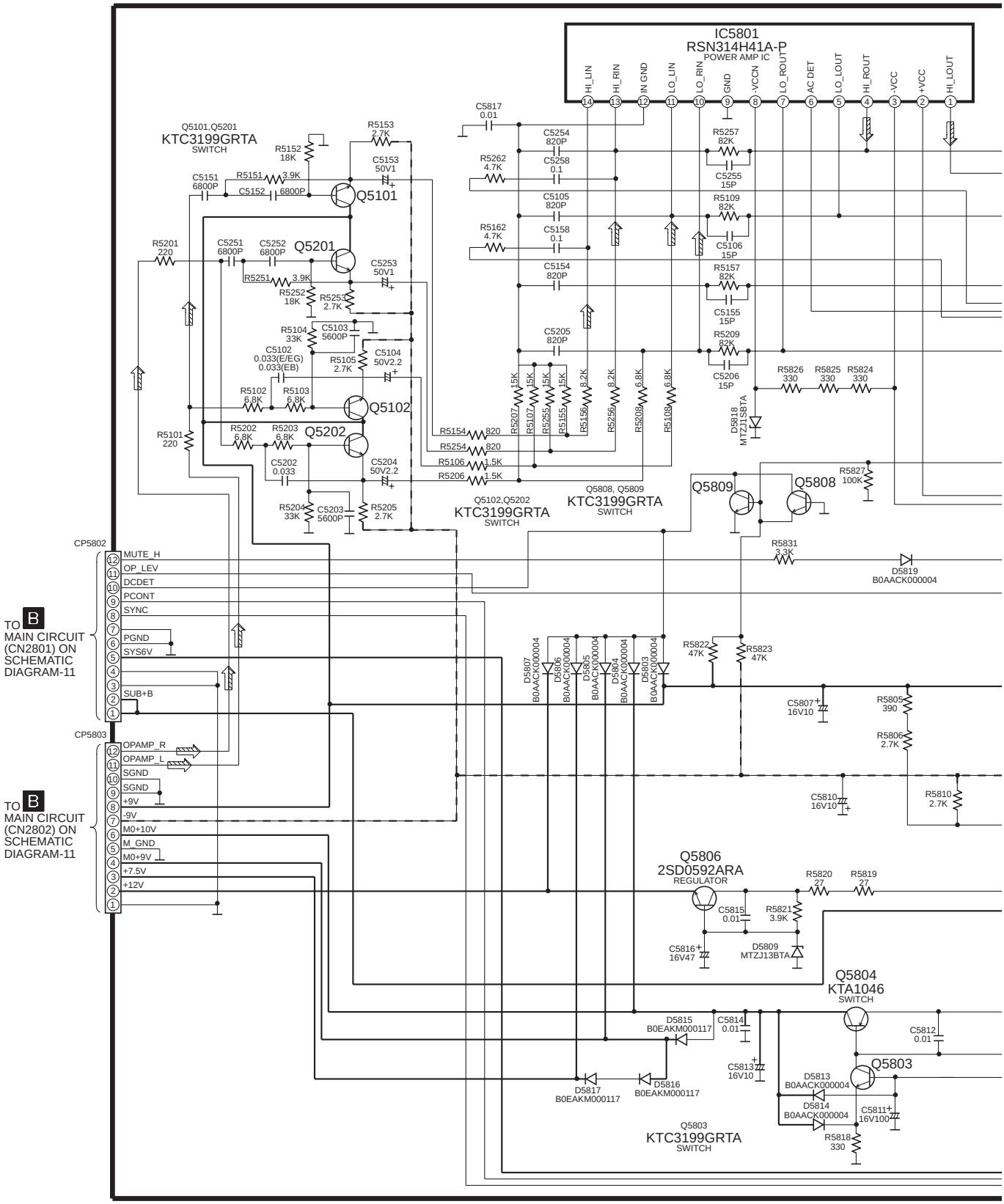

SCHEMATIC DIAGRAM-19

F POWER CIRCUIT

- - - : -B SIGNAL LINE
——— : +B SIGNAL LINE
⇨ : MAIN SIGNAL LINE

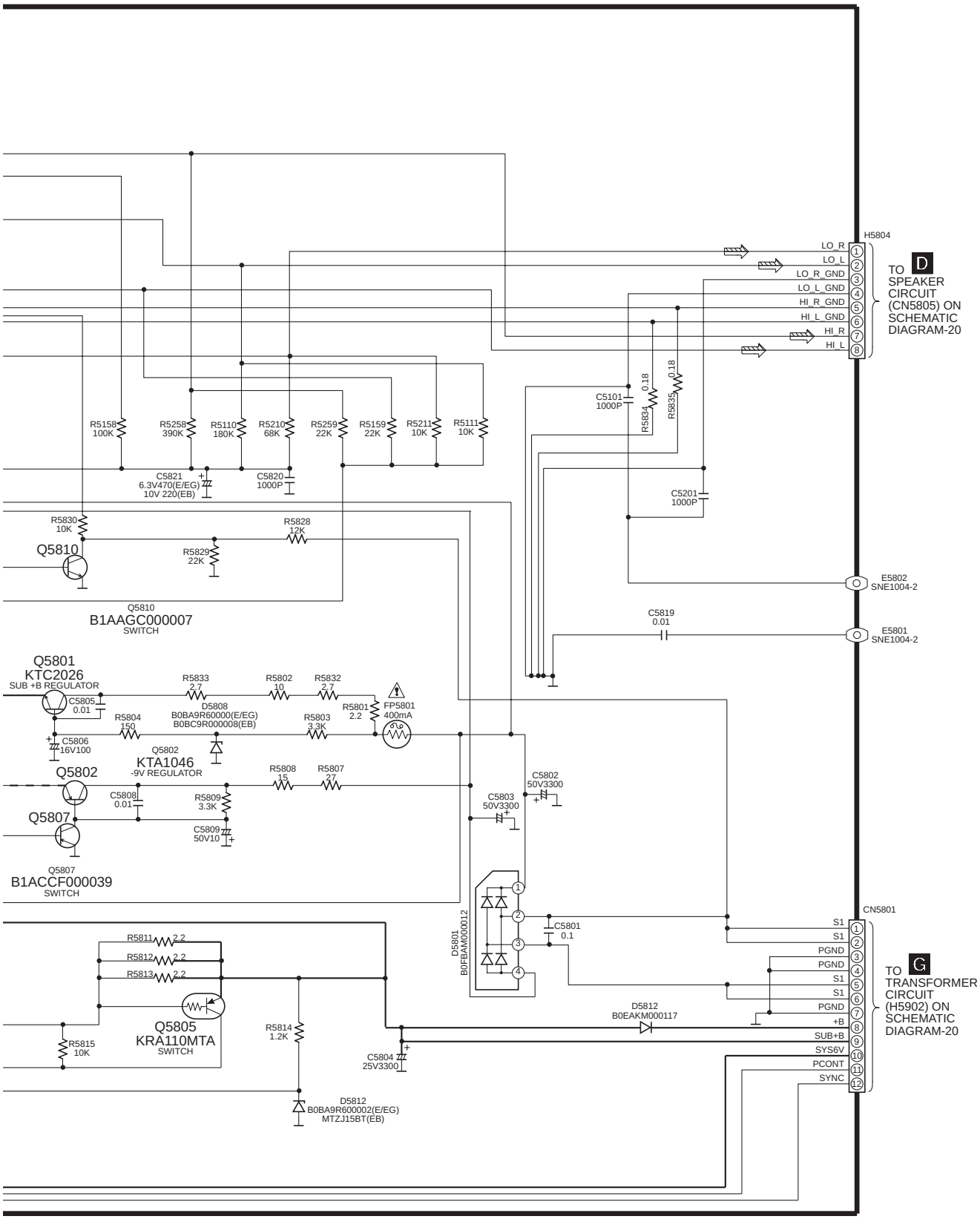

17.7. (D) Speaker Circuit & (G) Transformer Circuit

SCHEMATIC DIAGRAM-20

D SPEAKER CIRCUIT

- - - : -B SIGNAL LINE

——— : +B SIGNAL LINE

⇨ : MAIN SIGNAL LINE

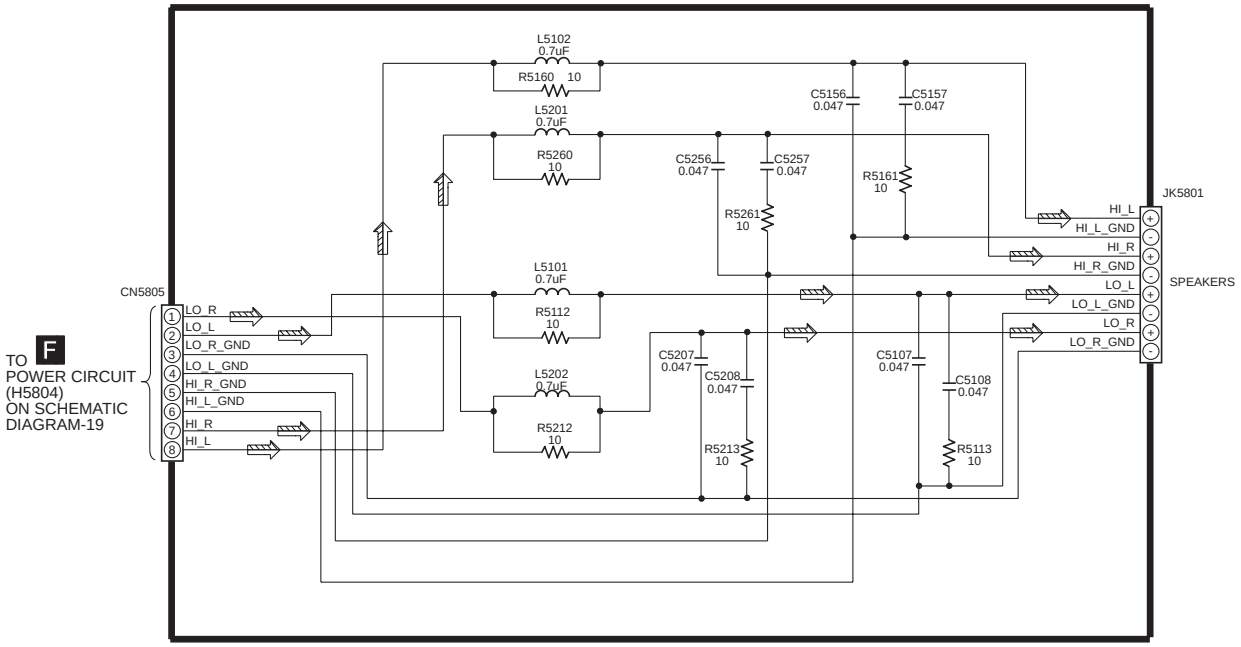

G TRANSFORMER CIRCUIT

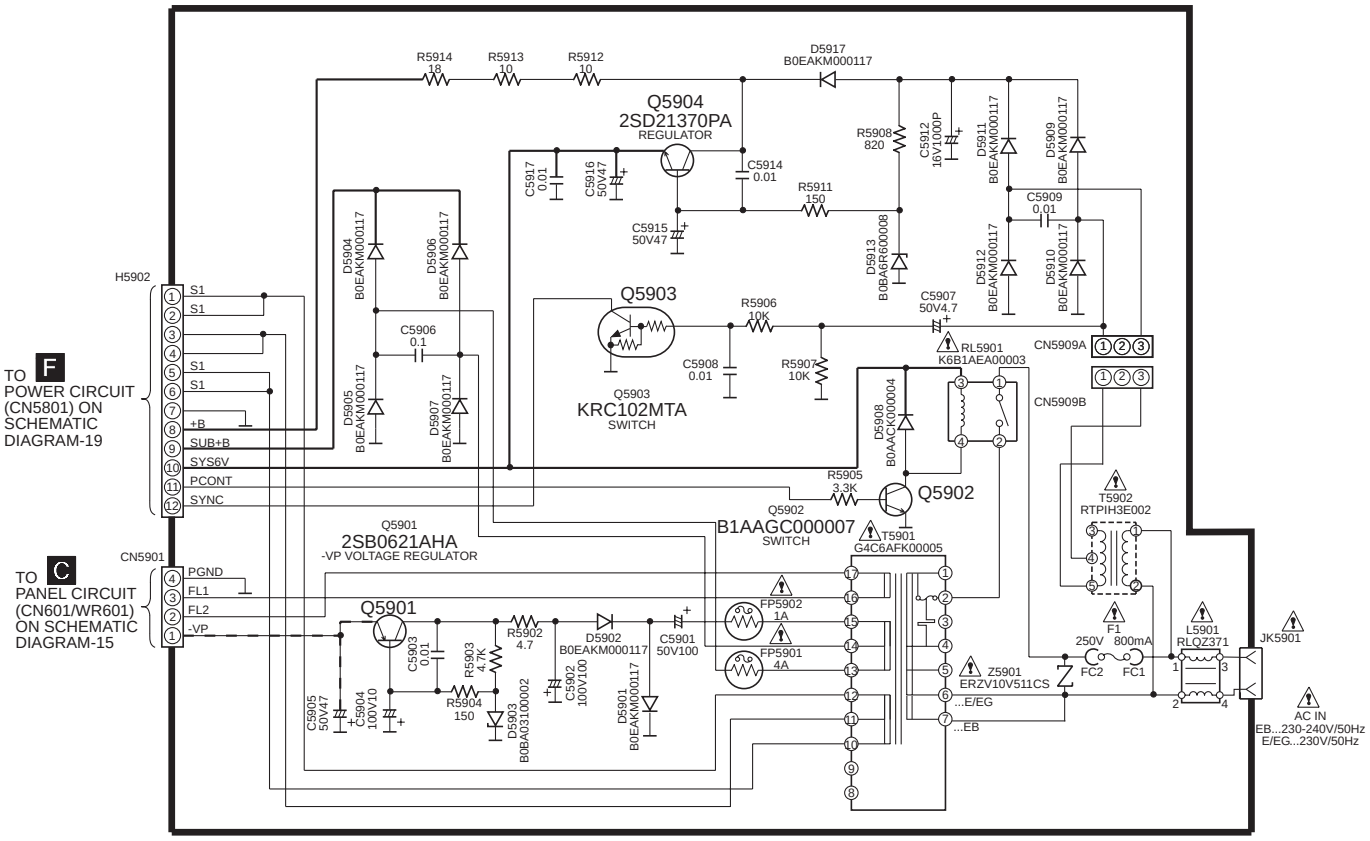

17.8. (K) CD Loading Circuit

SCHEMATIC DIAGRAM-21

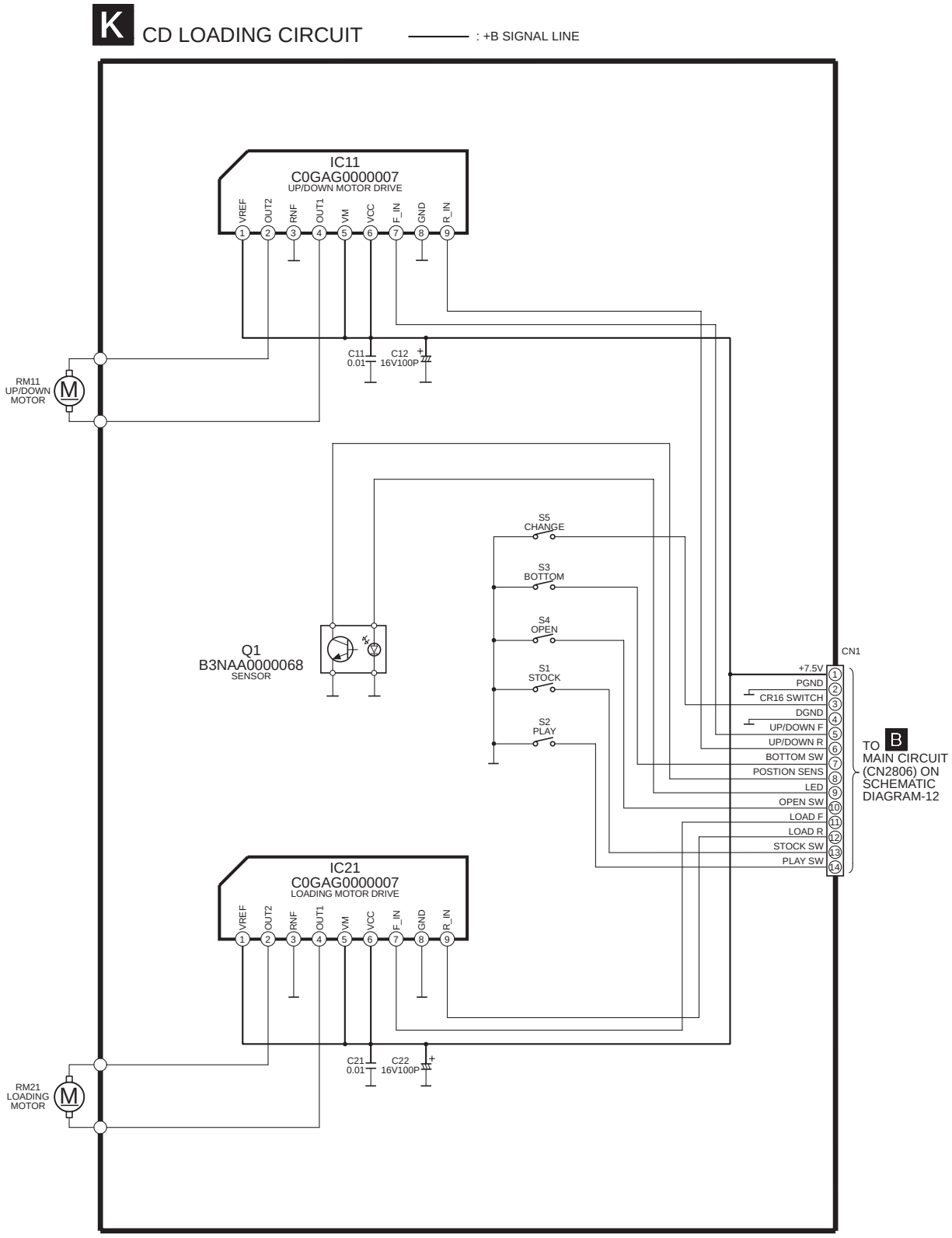

18 Printed Circuit Board

18.1. (A) DVD Module P.C.B. (Side: A & B)

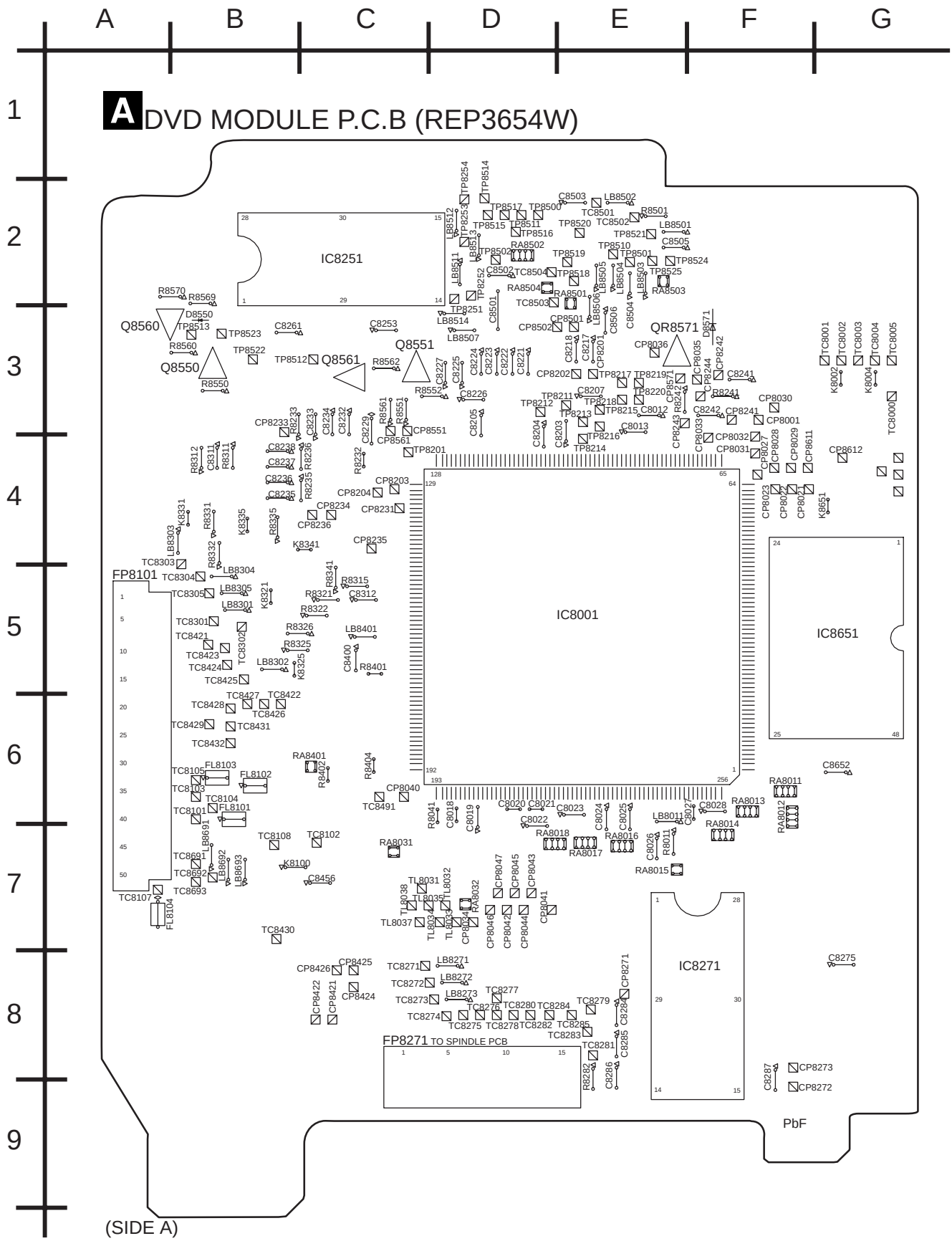

A DVD MODULE P.C.B (REP3654W)

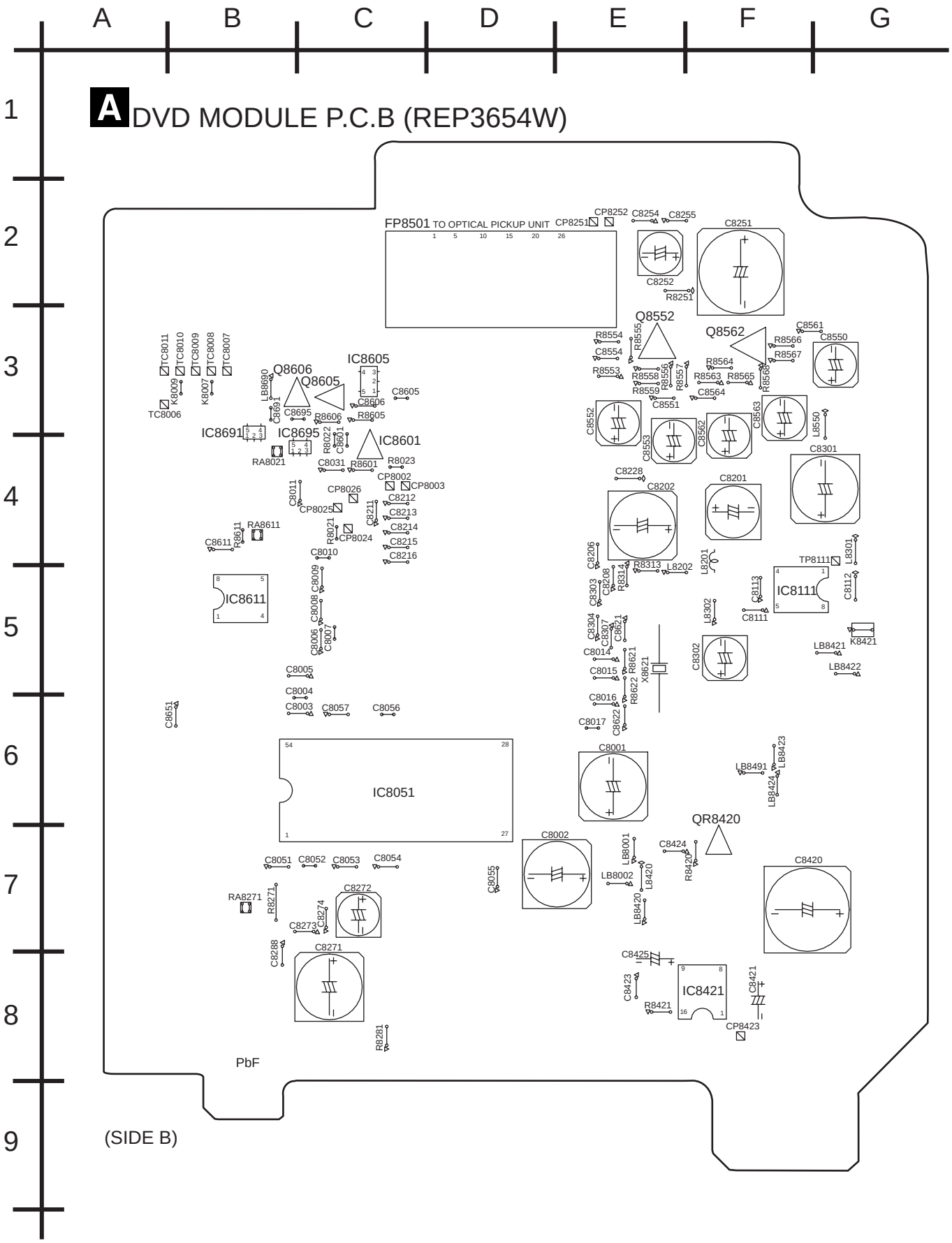

18.2. (B) Main P.C.B.

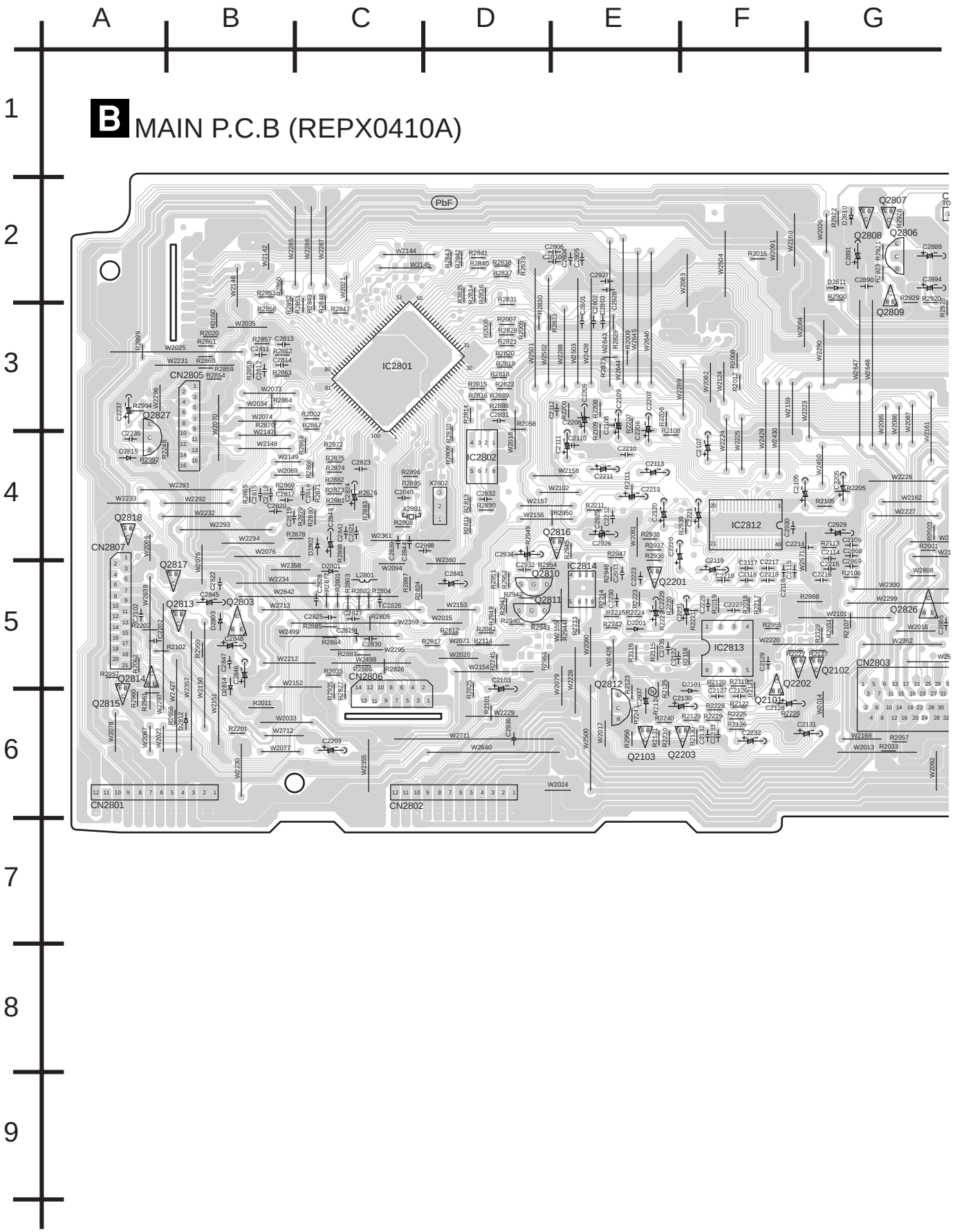

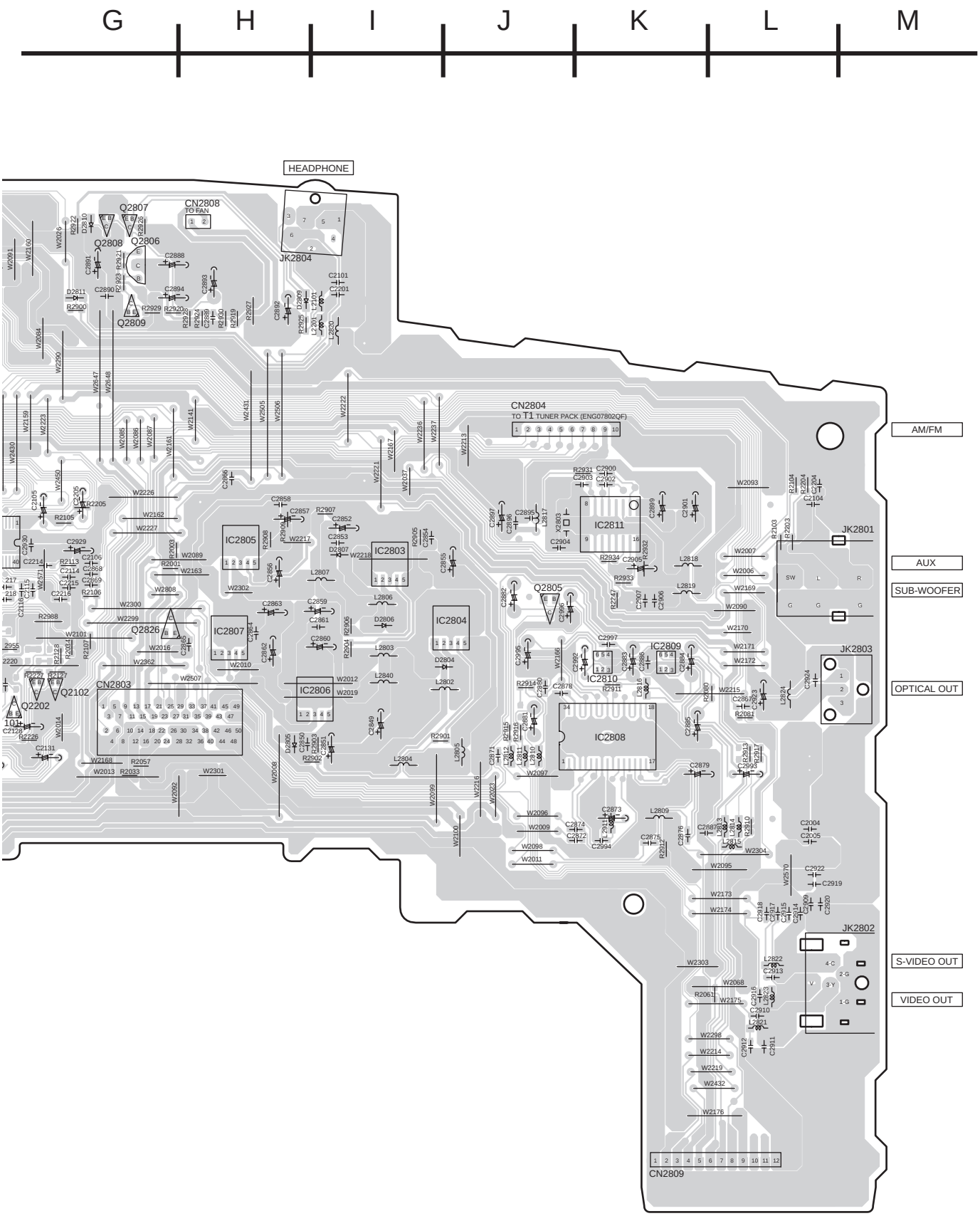
G
H
I
J
K
L
M
HEADPHONE
CN2808
TO FAN
JK2804
CN2804
TO T1 TUNER PACK (ENG07802QF)
AM/FM
AUX
SUB-WOOFER
JK2801
JK2803
OPTICAL OUT
JK2802
S-VIDEO OUT
VIDEO OUT
CN2803
CN2809
IC2805
IC2803
IC2807
IC2804
IC2806
IC2811
IC2809
IC2810
IC2808
Q2807
Q2808
Q2806
Q2809
Q2805
Q2826
Q2102
Q2202

18.3. (C) Panel P.C.B.

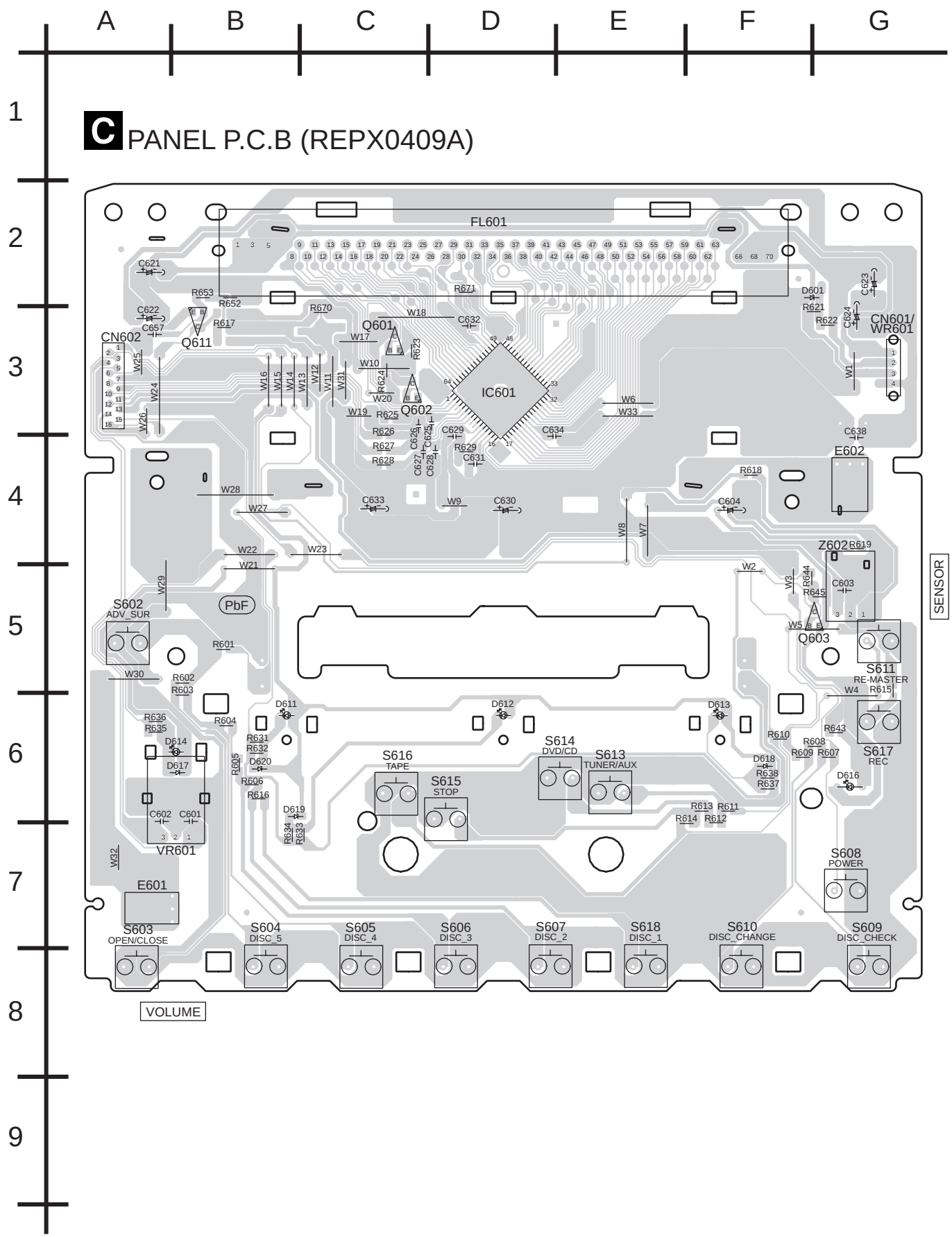

18.4. (D) Speaker P.C.B. & (E) Scart P.C.B.

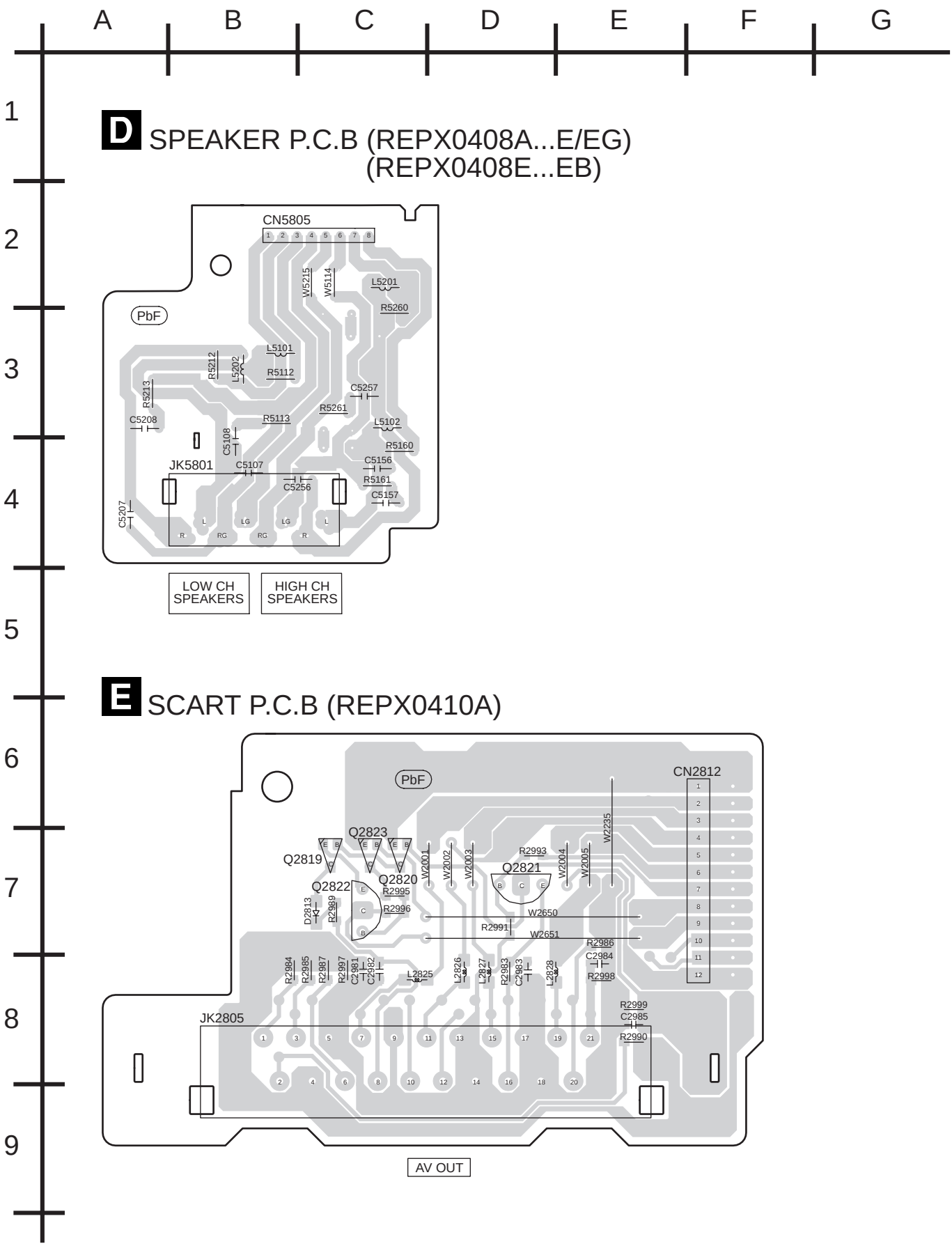

18.5. (F) Power P.C.B.

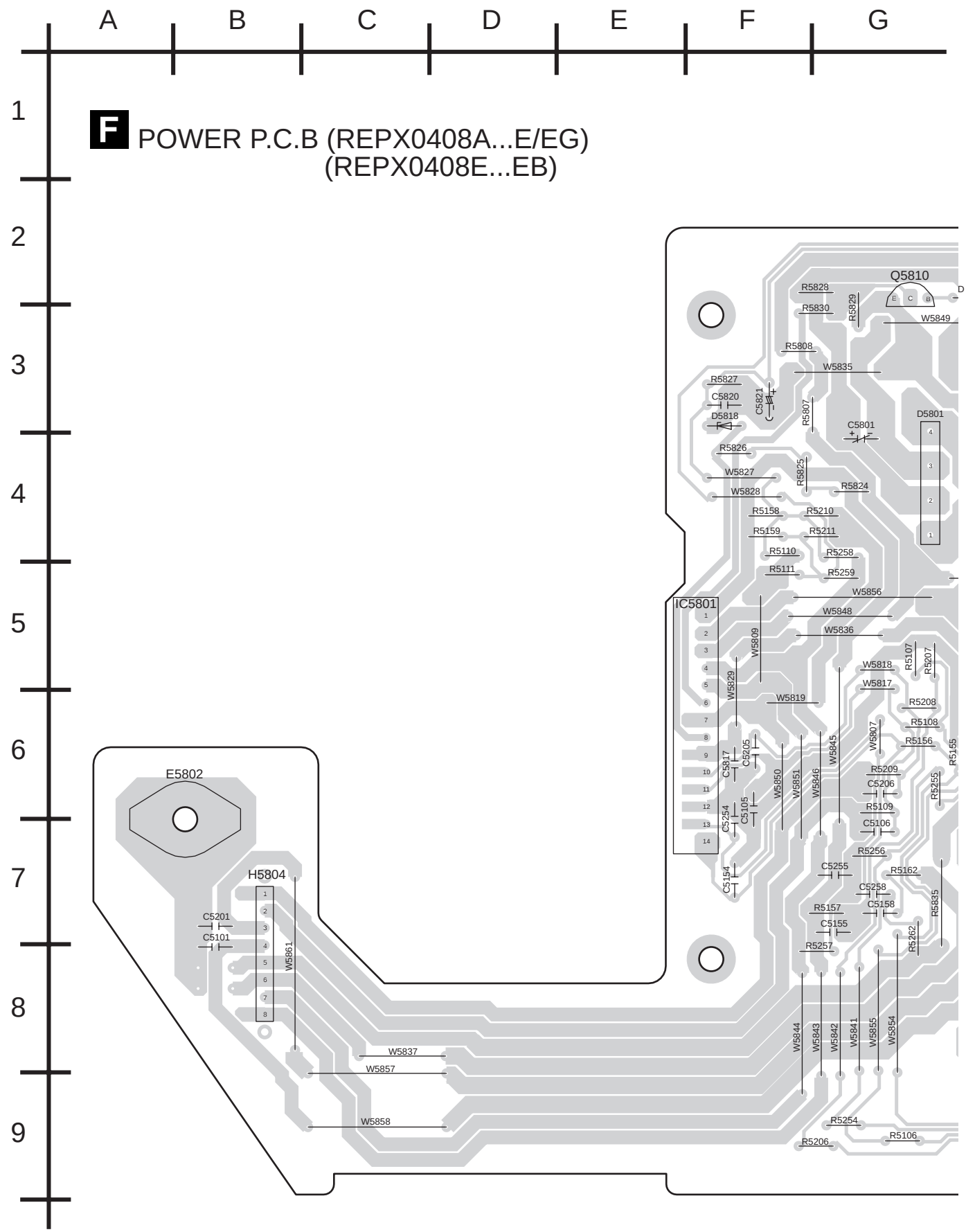

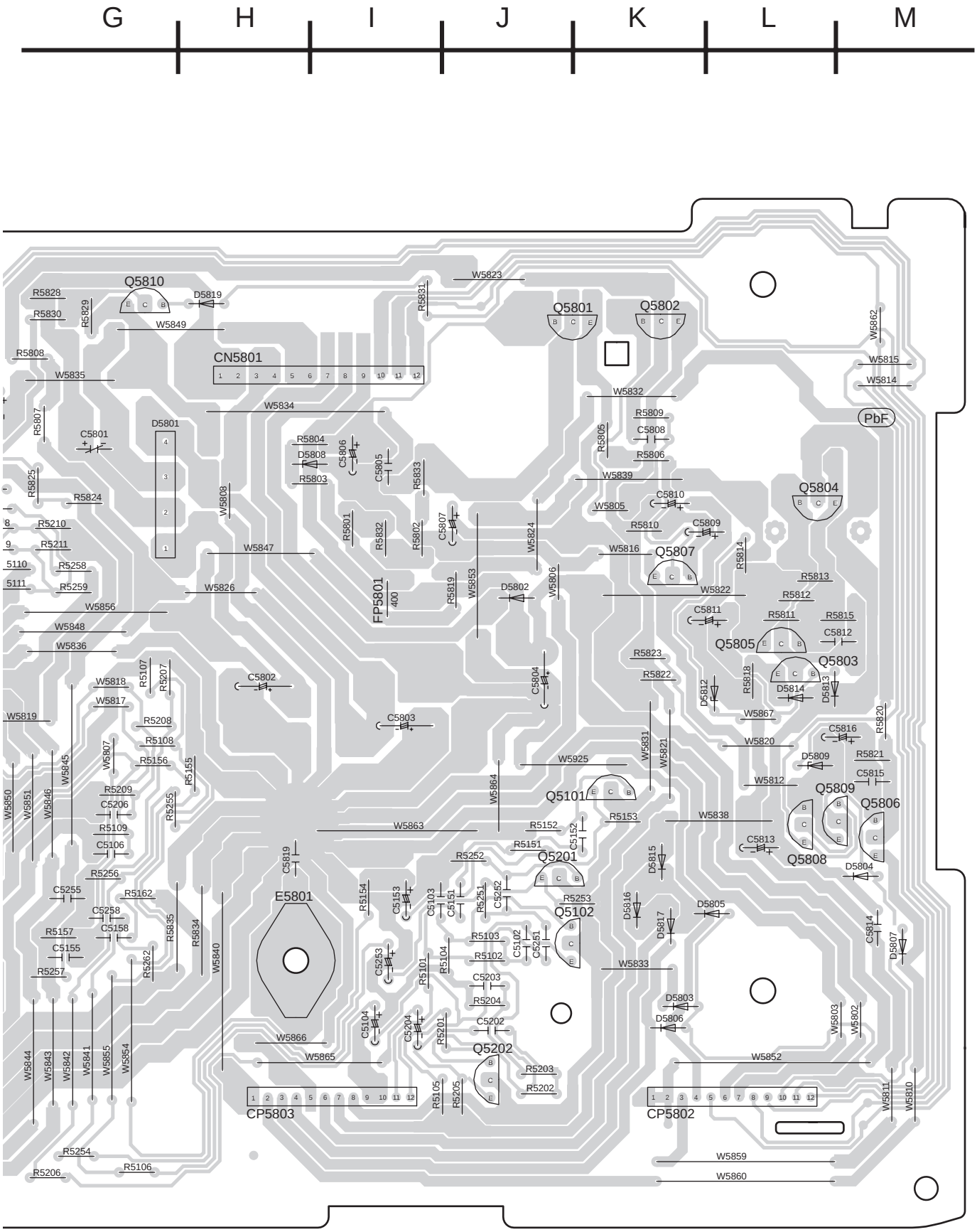
G
H
I
J
K
L
M
Q5810
Q5801
Q5802
CN5801
D5801
FP5801
Q5804
Q5807
Q5805
Q5803
Q5809
Q5806
Q5808
Q5101
Q5201
Q5102
Q5202
E5801
CP5803
CP5802
PbF

18.6. (G) Transformer P.C.B.

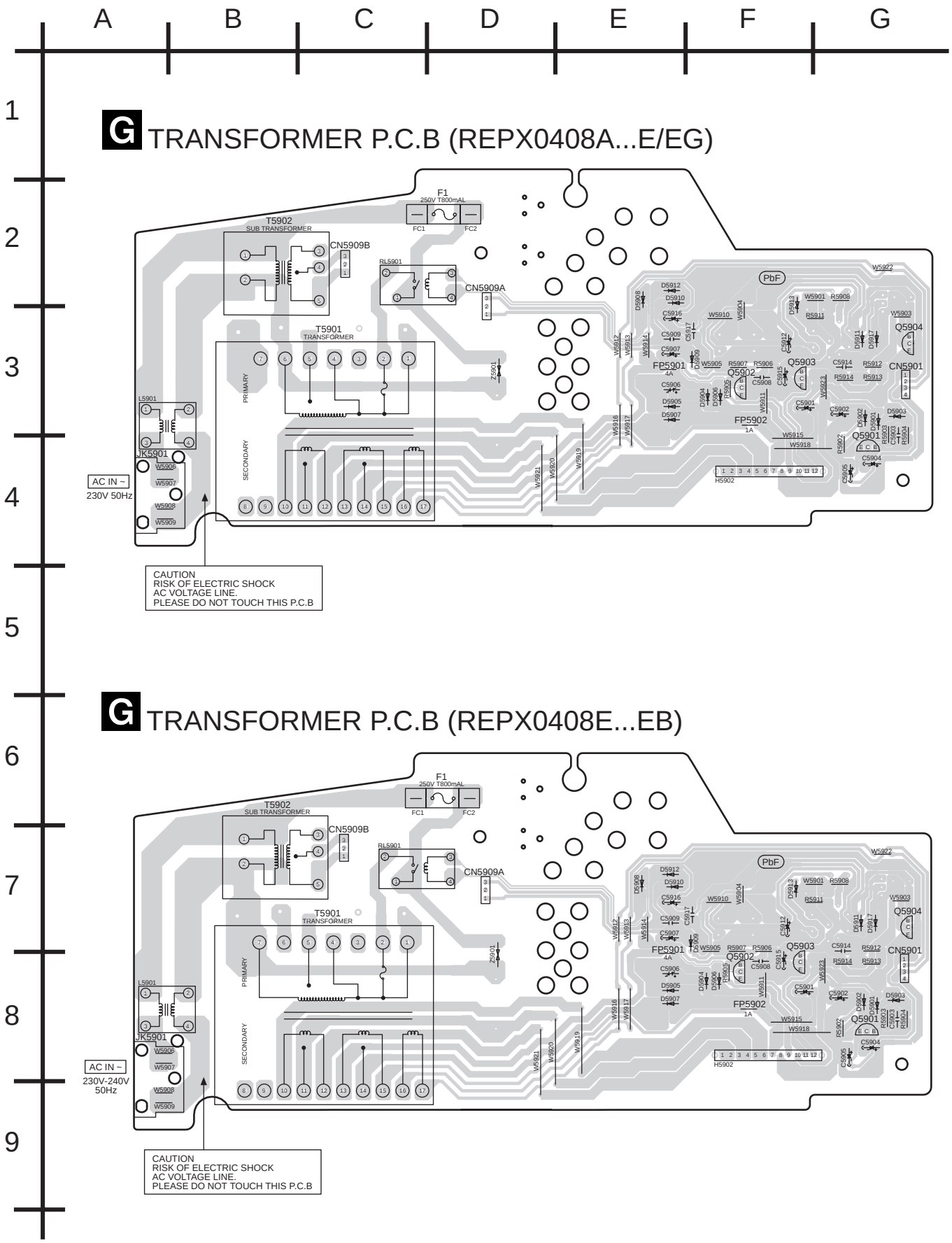

18.7. (H) Deck P.C.B. & (I) Tape Eject P.C.B.

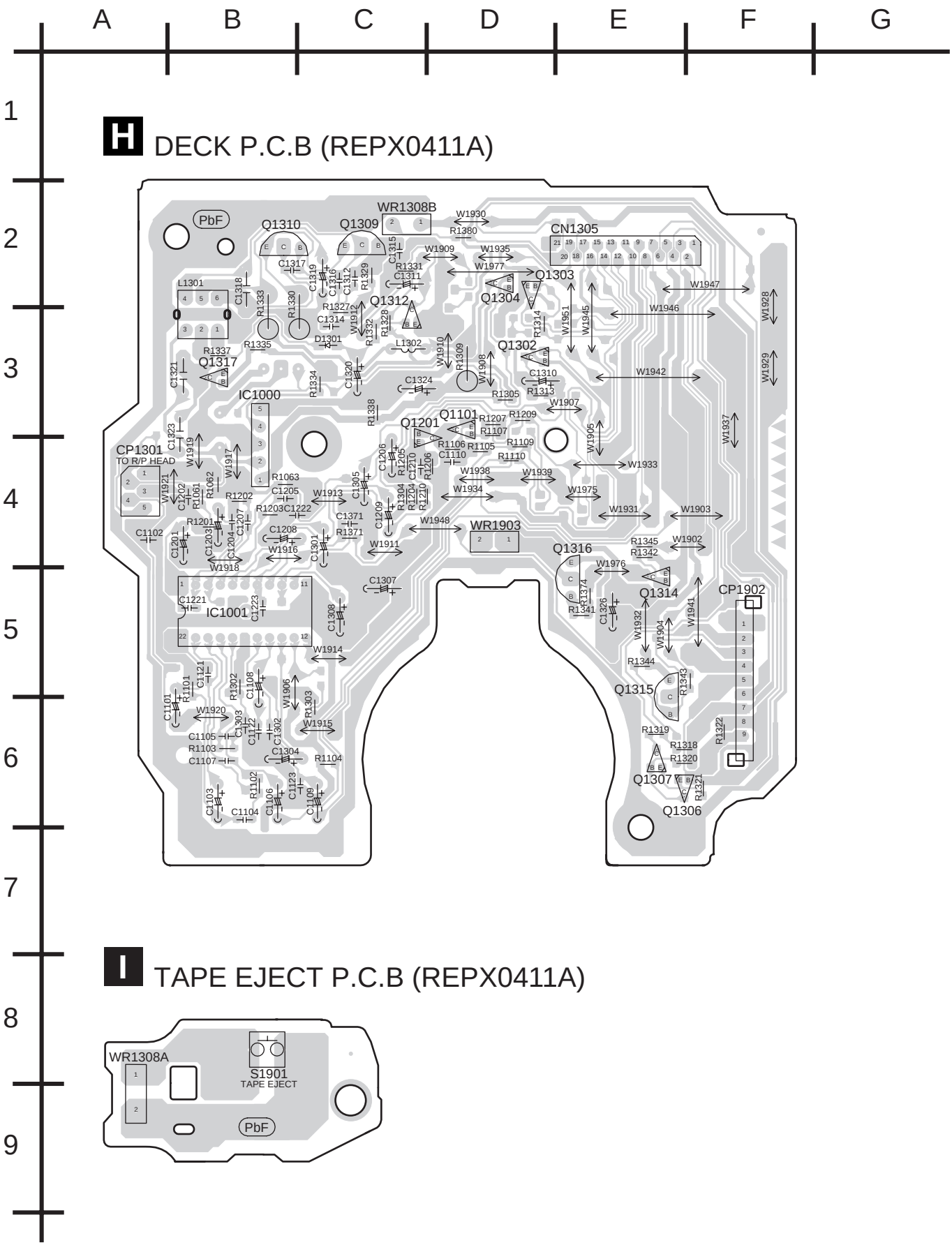

18.8. (J) Deck Mechanism P.C.B. & (K) CD Loading P.C.B.

ERROR: \\CENTURY_D\CDR\MD0403084C2S_SA-PM39DE\pcbcdld.pdf

19 Wiring Connection Diagram

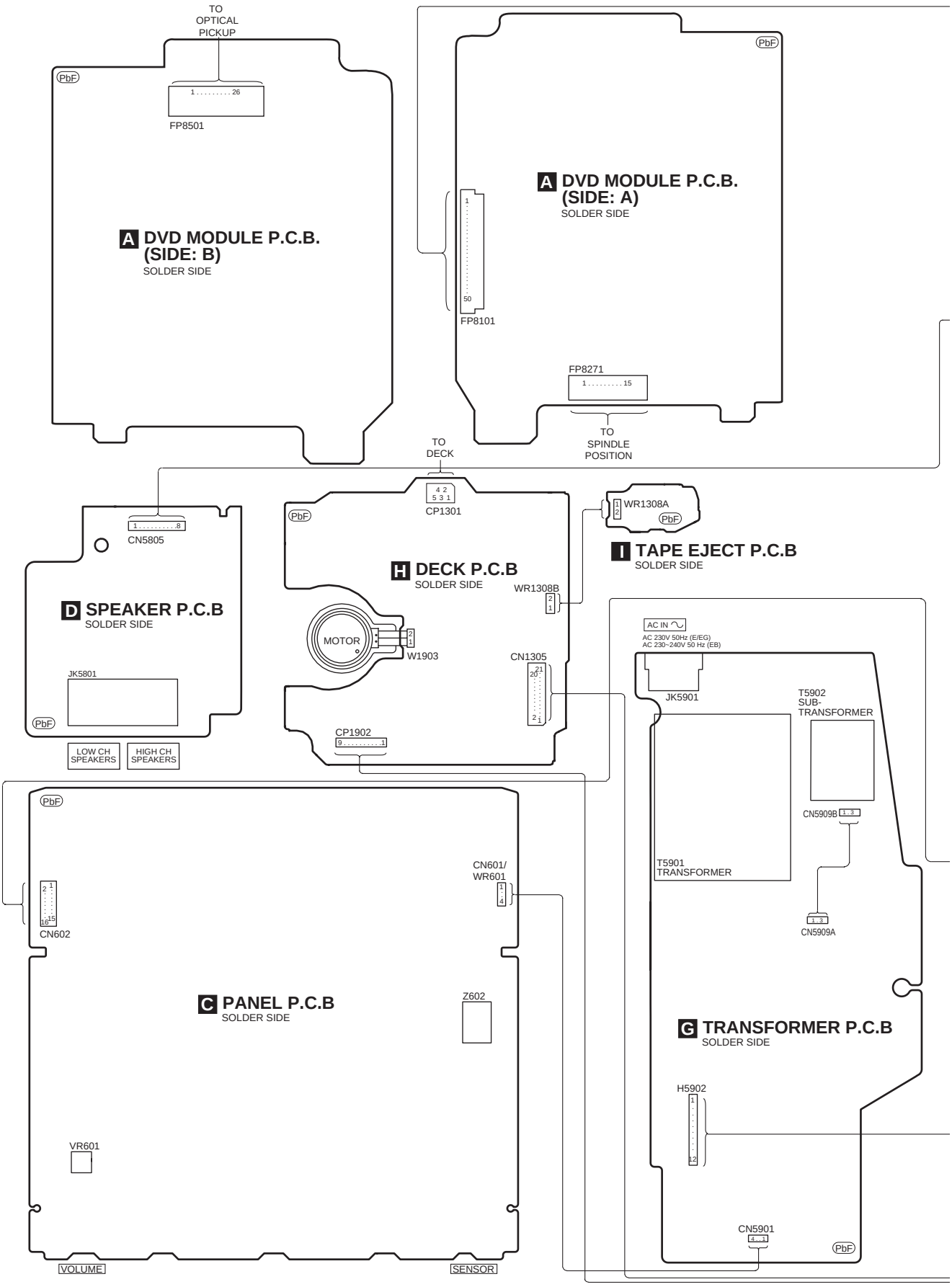

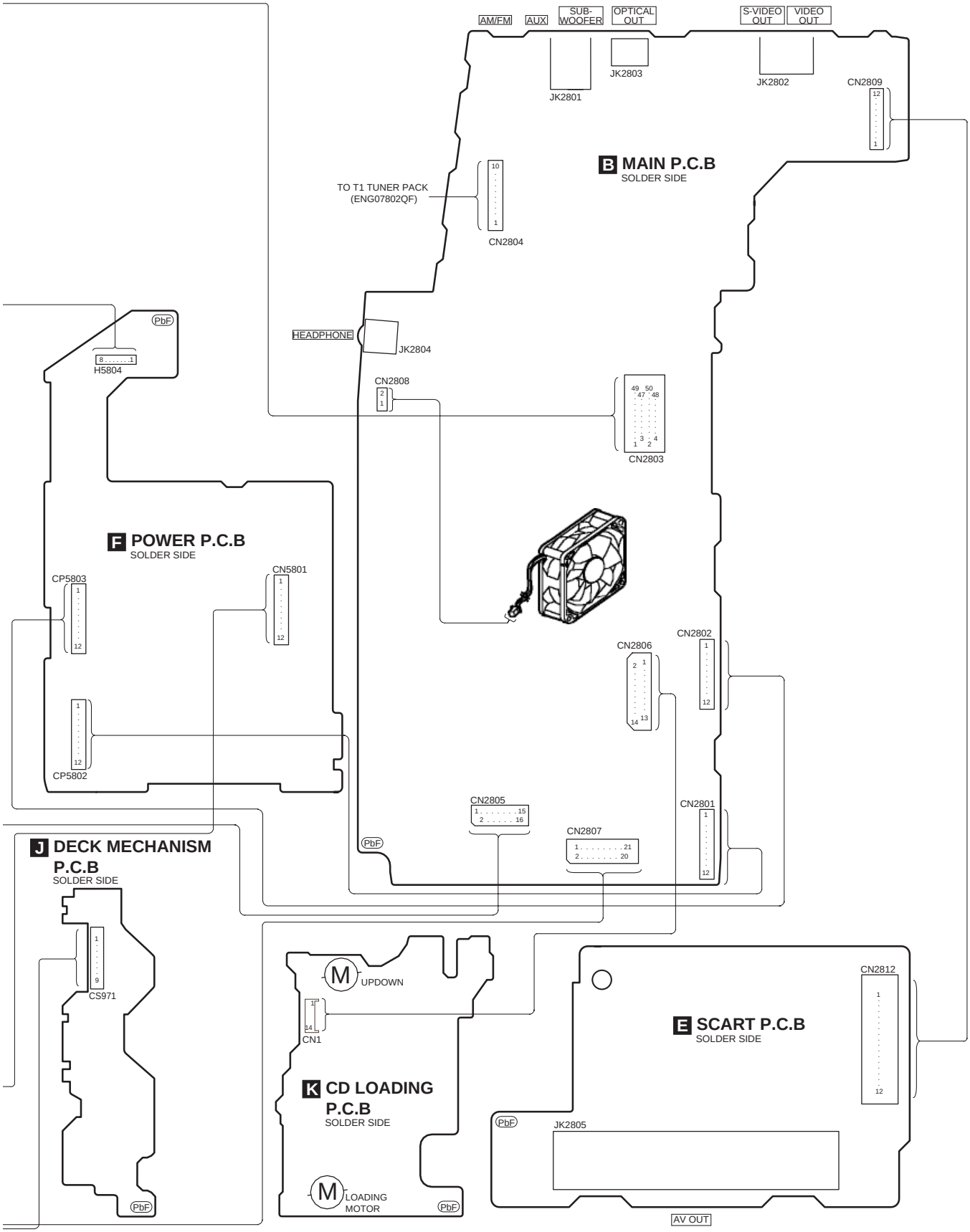
AM/FM
AUX
SUB-WOOFER
OPTICAL OUT
S-VIDEO OUT
VIDEO OUT
JK2801
JK2803
JK2802
CN2809
B MAIN P.C.B
SOLDER SIDE
TO T1 TUNER PACK (ENG07802QF)
CN2804
HEADPHONE
JK2804
PbF
H5804
CN2808
CN2803
F POWER P.C.B
SOLDER SIDE
CP5803
CN5801
CN2806
CN2802
CP5802
CN2805
CN2807
CN2801
J DECK MECHANISM P.C.B
SOLDER SIDE
CS971
UPDOWN
CN1
K CD LOADING P.C.B
SOLDER SIDE
LOADING MOTOR
CN2812
E SCART P.C.B
SOLDER SIDE
JK2805
AV OUT

20 Type Illustrations of ICs, Transistors & Diodes

AN7326K (26P)	C1BB00000715 (16P) KIA4558FEL (8P) C0GBF0000004 (16P) C0FBBK000035 (16P) C9ZB00000431 (34P)		C0DBZHE00011	C0AABB000085	CNB13030R2AU
C1AA00000612	RSN314H41A-P	C0GAG0000007	C1AB00001731	C3ABPG000067	C1BB00000822 (40P)
C3FBMD000134	C0GBG0000044	C3EBDG000052	C2CBJG000403 (100P) MN2DS0003APH (256P) C0HBB0000039 (64P)	C0JBCA000066 C0EBE0000384 C0EBA0000031	C0DBAJG00002
C0CBCBD00018	C0DBEFG00003 C0DBZHG00016	C3EBGC000044 (8P)	2SD0592ARA 2SD09650RA KTA12710YTA KTA1504GRTA KTC32030YTA KTC3205YTA		B1AAGC000006
B1GBCFGH0001 2SB09700RL 2SD1819A0L UNR511V00L UNR221200L UNR211500L	KRC107STA B1ABGC000005 UNR521100L B1GDCFJJ0002 B1ABCF000011		KTC3875GRTA KRC101STA KRC102STA KRC103STA 2SD2114K1V B1GDCFGH0002 2SB1219AHL		KTC3199GRTA B1AAGC000007 B1ACCF000039
B1CABA000002	2SD21370PA	KTA1046 KTC2026	B3NAA0000068	1SS380TE-17 B0ACCK000005 B0BC7R500001 B0BC5R600003	
2SB0621AHA	KRA102MTA KRC102MTA KRA110MTA	MA2S11100L	UDZSTE178R2B UDZSTE176R2B	B0BA9R600002 B0BC9R000008 B0BA6R600008 B0BA03100002	
B0AACK000004 MA2C16500E	B3AAA0000583	B0JCPC000004	B0FBAM000012	MTZJ15BTA MTZJ13BTA	MA2J72800L
B0BC8R100004	B0EAKM000117				

21 Terminal Function of IC's

21.1. IC2801(C2CBJG000403) System Microprocessor

Pin No.	Mark	I/O	Function
1	ST_SW	I	Stock Switch Change
2	OP/CL_REV	O	Reverse control signal for OPEN/ CLOSE motor
3	OP/CL_FWI	O	Forward control signal for OPEN/ CLOSE Motor
4	OPEN_SW	I	Signal from Rotary tray OPEN Switch
5	POSITION	I	Signal from of Position Detection sensor
6	MBP1	O	Micon Beat Proof 1
7	MBP2	O	Micon Beat Proof 2
8	BYTE	-	VSS (GND)
9	CNVss	-	VSS (GND) The Only Pull High Pin
10	XCIN	-	SUB CLOCK INPUT (32.768 kHz)
11	XCOUT	-	SUB CLOCK OUTPUT (32.768 kHz)
12	RESET	I	SYSTEM RESET INPUT
13	XOUT	-	MAIN CLOCK OUTPUT (8.0 MHZ)
14	Vss	-	GNS (0V)
15	XIN	-	MAIN CLOCK INPUT (10 MHZ)
16	VCC	-	POWER SUPPLY (5V)
17	NMI	I	CONNECT TO VCC, EXTERNAL INTERRUPT I/P
18	RMT	I	REMOCON INPUT
19	SYNC	I	AC FAILURE DETECT INPUT
20	Up/ Down R	O	Changer Motor 2 Reverse Control
21	Change SW	I	Changer Change Switch
22	BOTTOM SW	I	CHANGER BOTTOM SWITCH
23	EDA	I/O	DATA signal for the EEPROM
24	ECLK	O	CLOCK signal for the EEPROM
25	ECS	O	LAT signal for the EEPROM
26	UP/ DOWN F	O	Changer Motor 2 Forward Control
27	TU_SD	I	SIGNAL DET Input from Tuner
28	TU_ST/ DO	I	Stereo Indicator from Tuner/ DO-OUTPUT of Tuner IC
29	TU_SCL (PLL_CK)	O	Clock for Tuner (Clock Signal for the PLL Tuner)
30	TU_SDA (PLL_DA)	O	12C Data for Tuner (PLL DATA - DI INPUT of Tuner)
31	TU_FM_DET (PLL_CE)	I	Tuner FM Detect (Latch Signal for the PLL Tuner)
32	N.C.	-	No Connection
33	N.C.	-	No Connection
34	N.C.	-	No Connection
35	DVD_CMD	O	CMD signal for the DVD Module
36	DVD_STA	I	STATUS signal from the DVD module
37	DVD_CK	I	CLK signal for the DVD Module
38	N.C.	L	No Connection
39	PROGRESSIVE	O	Video Output Control for Progressive
40	N.C.	L	No connection
41	EPM	I	For Flash
42	SUB MUTE	O	Subwoofer Mute Signal
43	HP_MUTE	O	Head Phone Mute signal
44	DVD_MUTE	I	Signal fromDVD module control mute circuit
45	RGBH	O	RGB video output control signal
46	VMIX_Ctrl	O	Control signal for the video signal Mix
47	Wide1	O	S-video output control
48	ASP_DA	O	DATA signal for 6ch VOL ASP
49	ASP_CK	O	CLOCK signal for 6ch VOL ASP
50	SW2	O	Subwoofer level control 2
51	SW1	O	Subwoofer level control 1
52	KA_LAT	O	Karaoke Latch
53	Karaoke Data	O	Karaoke Data
54	KA_CLK	O	Karaoke Clock
55	Demo	I	DEMO detect Key (H= Default On, L= Default Off)
56	N.C.	-	No Connection
57	N.C.	-	No Connection
58	N.C.	-	No Connection
59	N.C.	-	No Connection
60	N.C.	-	No Connection
61	N.C.	-	No Connection
62	Vcc	-	POWER SUPPLY 5.0V
63	N.C.	-	No Connection
64	Vss	-	Ground (0V)
65	N.C.	-	No Connection
66	N.C.	-	No Connection
67	N.C.	-	No Connection
68	DVD_PCNT	O	Control Signal for the Power for the DVD MODULE
69	N.C.	-	No Connection
70	PCONT	O	Control Signal for the Power Control Relay
71	MUTE_H	O	HIC MUTE
72	DC DET	I	Signal from the DC Detection circuit
73	RDS_CK	I	Clock signal for the RDS decoder
74	RDS_DO	I	Data signal for the RDS decoder
75	JOG_B	I	Signal B from Volume JOG
76	JOG_A	I	Signal A from Volume JOG
77	MIC_SW	I	MIC Switch detection
78	REC	O	Deck Recording Control (Recording= H)
79	PHOTO	I	Deck photo Detection
80	DMT	O	Deck Mute at Mecha Transition (L= Mute Off, H= Mute On)
81	BP	O	AM Beat proof 1 (L= BP1, H= BP2)
82	MOTOR	O	Deck Motor Control (L= OFF, H=ON)
83	PLUNGER	O	Deck Plunger Control (L=OFF, H=ON)
84	FLD_CK	O	Clock Signal for the FL Driver
85	FLD_DA	O	Data input for the FL Driver
86	LED	O	LED Control For dimmer
87	FLD_RST	O	Reset Signal for the FL Driver
88	FLD_CS	O	Latch Signal for the FL Driver
89	DECK_AD1	I	Deck AD Input 1
90	DECK_AD2	I	Deck AD Input 2
91	Key 3	I	Key 3 line input
92	Key 2	I	Key 2 line input
93	DES3	I	REGION Setting for DVD
94	DES2	I	REGION Setting for DVD (Speaker Region) for latin America
95	DES1	I	REGION Setting for DVD (Tuner, RDS, SCART Region)
96	AVSS	-	ANALOG POWER SUPPLY INPUT
97	KEY 1	I	Key 1 line input
98	VREF	-	REFERENCE VOLTAGE INPUT
99	AVCC	-	ANALOG POWER SUPPLY INPUT
100	PLAY_SW	I	Play Switch

22 Troubleshooting Flowchart (CD Section Circuit)

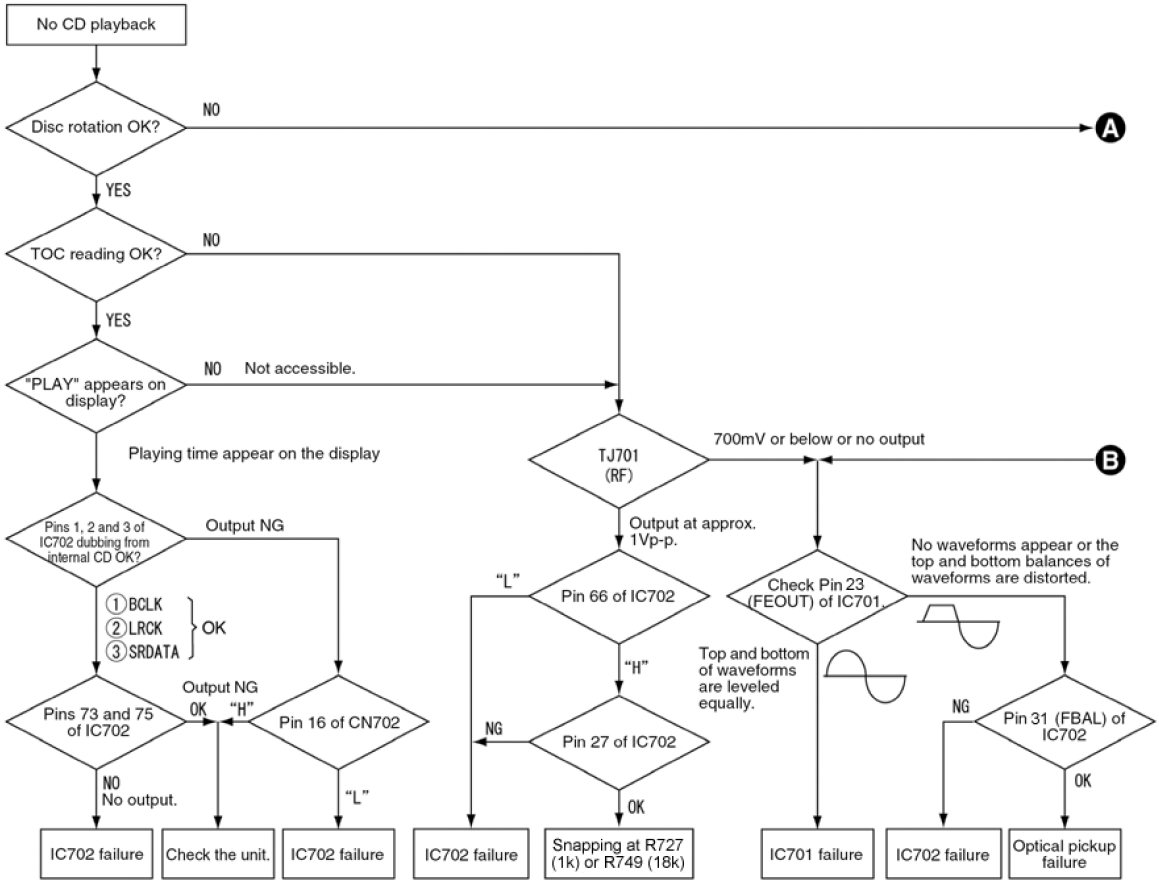

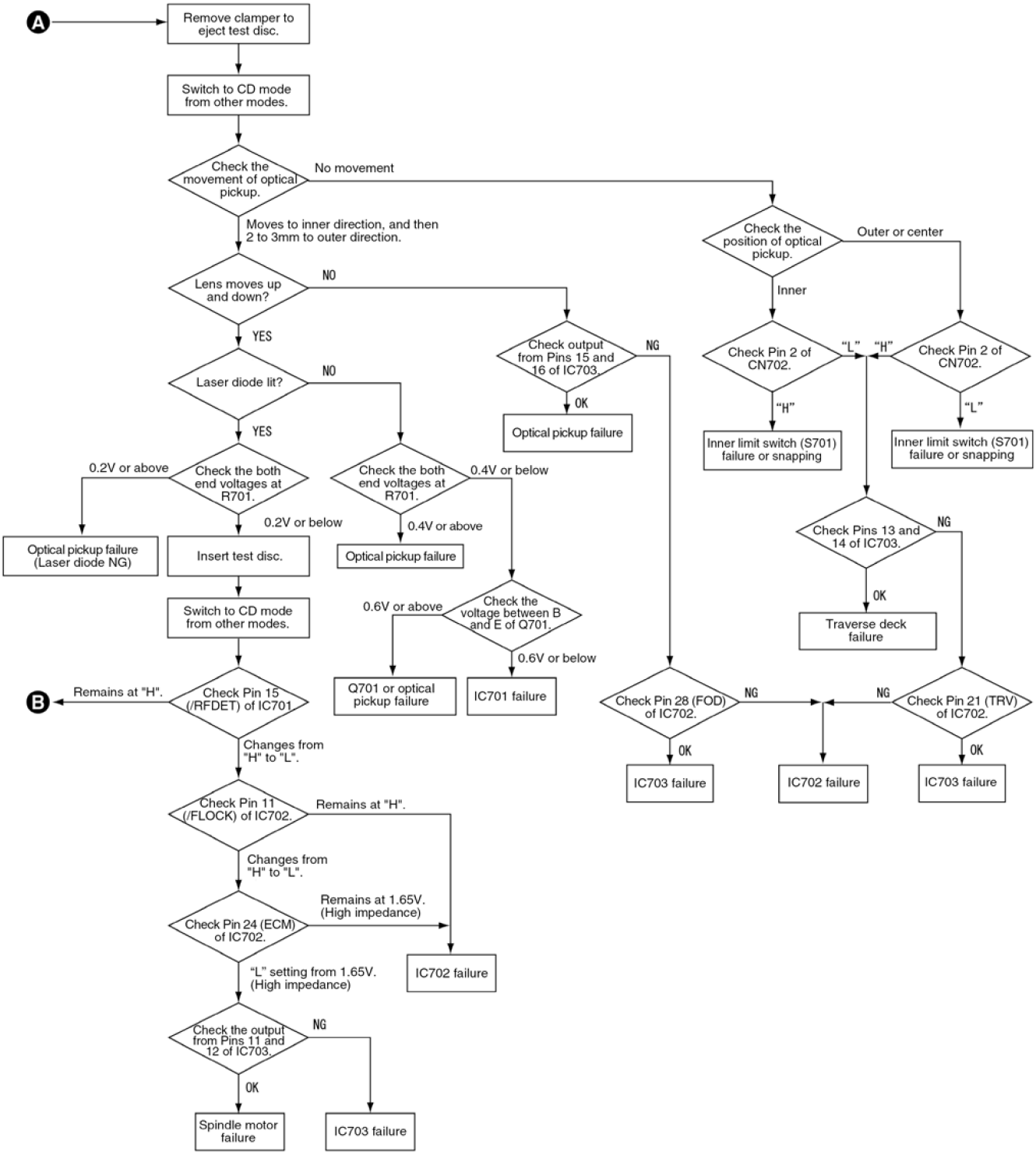
A
Remove clamper to eject test disc.
Switch to CD mode from other modes.
Check the movement of optical pickup.
No movement
Moves to inner direction, and then 2 to 3mm to outer direction.
Lens moves up and down?
NO
YES
Laser diode lit?
NO
YES
Check output from Pins 15 and 16 of IC703.
NG
OK
Optical pickup failure
Check the position of optical pickup.
Outer or center
Inner
Check Pin 2 of CN702.
"L"
"H"
Check Pin 2 of CN702.
"H"
"L"
Inner limit switch (S701) failure or snapping
Inner limit switch (S701) failure or snapping
Check the both end voltages at R701.
0.2V or above
0.2V or below
Optical pickup failure (Laser diode NG)
Insert test disc.
Check the both end voltages at R701.
0.4V or below
0.4V or above
Optical pickup failure
Check the voltage between B and E of Q701.
0.6V or above
0.6V or below
Q701 or optical pickup failure
IC701 failure
Check Pins 13 and 14 of IC703.
NG
OK
Traverse deck failure
Switch to CD mode from other modes.
B
Remains at "H".
Check Pin 15 (/RFDET) of IC701
Changes from "H" to "L".
Check Pin 28 (FOD) of IC702.
NG
OK
IC703 failure
IC702 failure
Check Pin 21 (TRV) of IC702.
NG
OK
IC703 failure
Check Pin 11 (/FLOCK) of IC702.
Remains at "H".
Changes from "H" to "L".
Check Pin 24 (ECM) of IC702.
Remains at 1.65V. (High impedance)
IC702 failure
"L" setting from 1.65V. (High impedance)
Check the output from Pins 11 and 12 of IC703.
NG
OK
Spindle motor failure
IC703 failure

23 Parts Location and Replacement Parts List

Notes:

- Important safety notice:

  Components identified by ⚠ mark have special characteristics important for safety.

  Furthermore, special parts which have purposes of fire-retardant (resistors), high-quality sound (capacitors), low-noise (resistors), etc. are used.

  When replacing any of these components, be sure to use only manufacturers's specified parts shown in the parts list.
- The parenthesized indications in the Remarks column specify the areas or color. (Refer to the cover page for area or color.)

  Parts without these indications can be used for all areas.
- Warning: This product uses a laser diode. Refer to caution statements on "Precaution of Laser Diode".

  ACHTUNG:

  – Die Lasereinheit nicht zerlegen.

  – Die Lasereinheit darf nur gegen eine vom Hertsteller spezifizierte Einheit ausgetauscht werden.
- Capacitor values are in microfarad (µF) unless specified otherwise, P=Pico-farads(pF); Farads.
- Resistance values are in ohms, unless specified otherwise, 1K=1,000(ohms).
- The marking (RTL) indicates that the Retention Time is limited for this item. After the discontinuation of this assembly in production, the item will continue to be available for a specific period of time. The retention period of availability is dependant on the type of assembly, and in accordance with the lows govening part and product retention. After the end of this period, the assembly will no longer be available.
- [M] indicates in the Remarks columns indicates parts that are supplied by **PAVCSG**.
- Reference for O/I book languages are as follows :

Ar : Arabic	Cf : Canadian French	Cz : Czech	Da : Danish
Du : Dutch	En : English	Fr : French	Ge : German
It : Italian	Ko : Korean	Po : Polish	Su : Russian
Sp : Spanish	Sw : Swedish	Co : Traditional Chinese	Cn : Simplified Chinese
Pe: Persian			

23.1. Deck Mechanism (RAA4110-S)

23.1.1. Deck Mechanism Parts Location

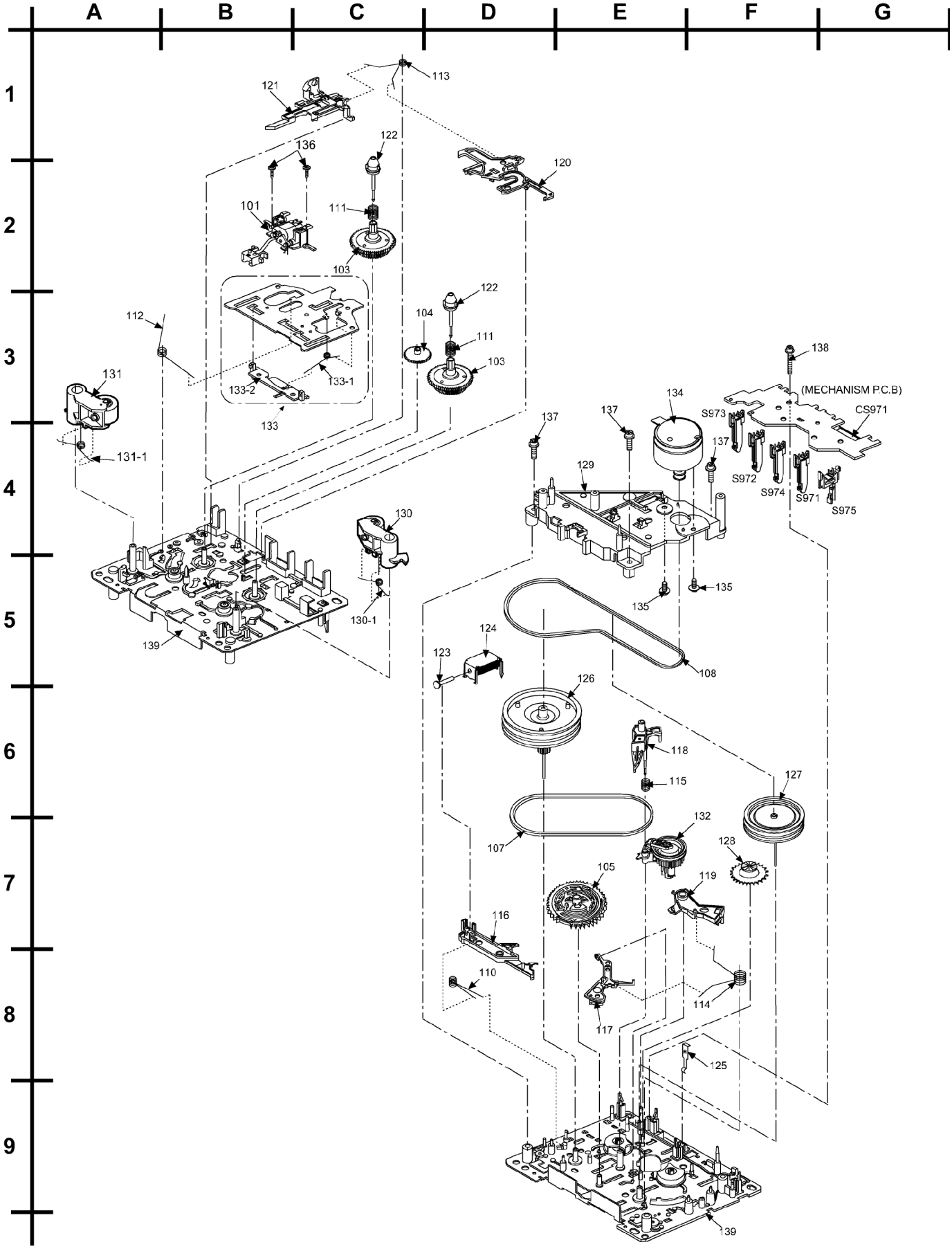

23.1.2. Deck Mechanism Parts List

Ref. No.	Part No.	Part Name & Description	Remarks
		CASSETTE DECK	
101	RED0071	R/P HEAD BLOCK UNIT	[M]
103	RDG0300	REEL BASE GEAR	[M]
104	RDG0301	WINDING RELAY GEAR	[M]
105	RDK0026	MAIN GEAR	[M]
107	RDV0033-4	WINDING BELT	[M]
108	RDV0034-1	CAPSTAN BELT A	[M]
110	RMB0312	TRIGGER LEVER SPRING	[M]
111	RMB0400	REEL SPRING	[M]
112	RMB0403	HEAB PANEL SPRING	[M]
113	RMB0404	BRAKE ROD SPRING	[M]
114	RMB0406	FR LEVER SPRING	[M]
115	RMB0408	THRUST SPRING	[M]
116	RML0370	TRIGGER LEVER	[M]
117	RML0371	FR LEVER	[M]
118	RML0372	WINDING LEVER	[M]
119	RML0374	EJECT LEVER	[M]
120	RMM0131	BRAKE ROD	[M]
121	RMM0133-1	EJECT ROD	[M]
122	RMQ0519	REEL HUB	[M]
123	RMS0398-1	MOVING CORE	[M]
124	RSJ0003	PLUNGER	[M]
125	RMC0061	PACK SPRING	[M]
126	RXF0061	FLYWHEEL F ASSY	[M]
127	RXF0062	FLYWHEEL R ASSY	[M]
128	RXG0040	FF RELAY GEAR ASSY	[M]
129	RMK0283A-J	SUB-CHASSIS	[M]
130	RXL0124	PINCH ROLLER F ASSY	[M]
130-1	RMB0401	PINCH ARM SPRING F	[M]
131	RXL0125	PINCH ROLLER R ASSY	[M]
131-1	RMB0402	PINCH ARM SPRING R	[M]
132	RXL0126	WINDING ARM ASSY	[M]
133	RXQ0412	HEAD PANEL ASSY	[M]
133-1	RMB0405	FR ROD SPRING	[M]
133-2	RMM0132	FR ROD	[M]
134	REM0098	CAP MOTOR ASSY	[M]
135	RHD26022	MOTOR SCREW	[M]
136	XTW2+5L	HEAD BLOCK UNIT SCREW	[M]
137	XTW26+10S	SUB-CHASSIS SCREW	[M]
138	XYC2+JF17	PCB EARTH SCREW	[M]
139	RFKJSTR280PP	MAIN CHASSIS ASS’Y	[M]

23.2. CD Loading Mechanism

23.2.1. CD Loading Mechanism Parts Location

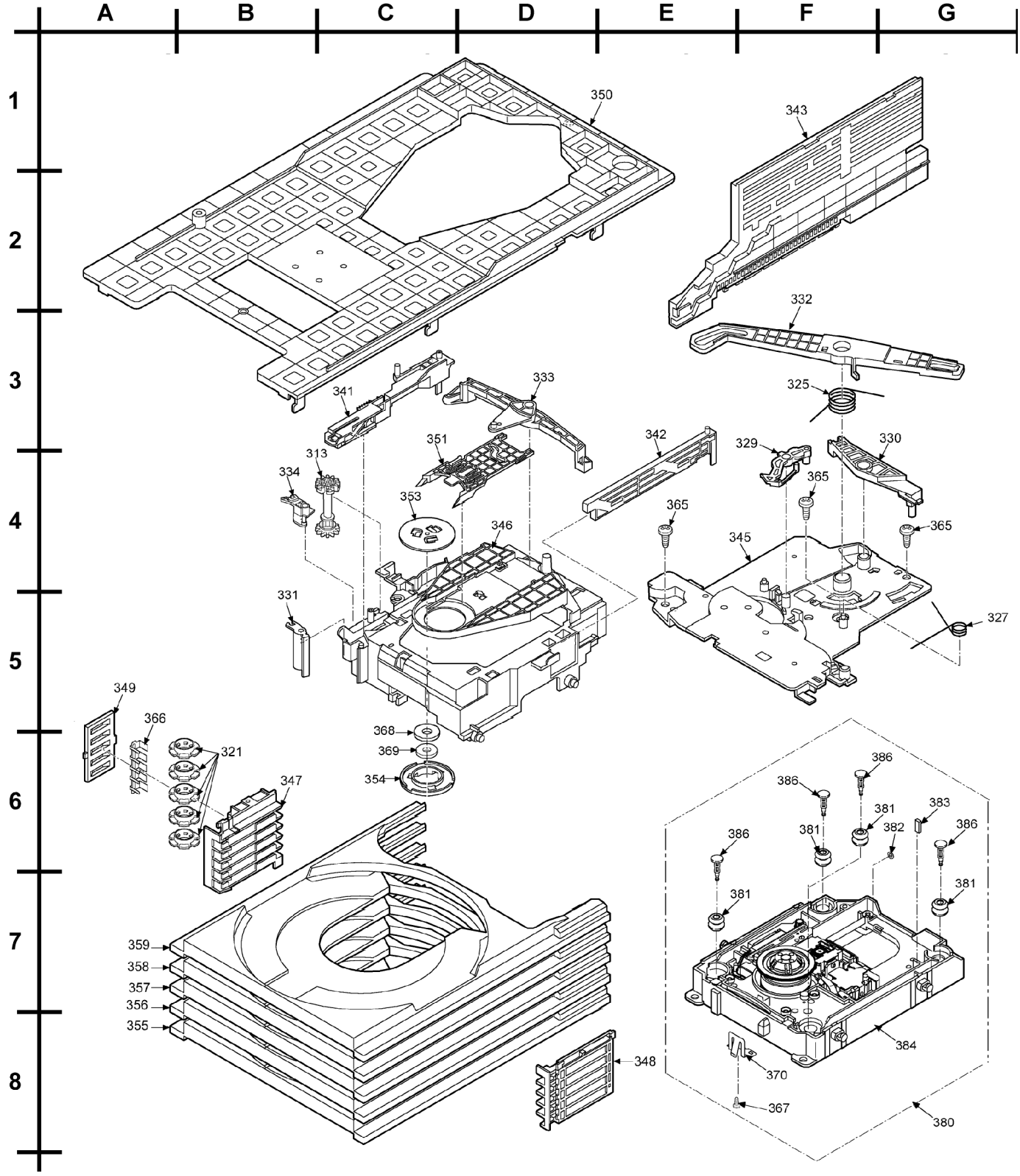

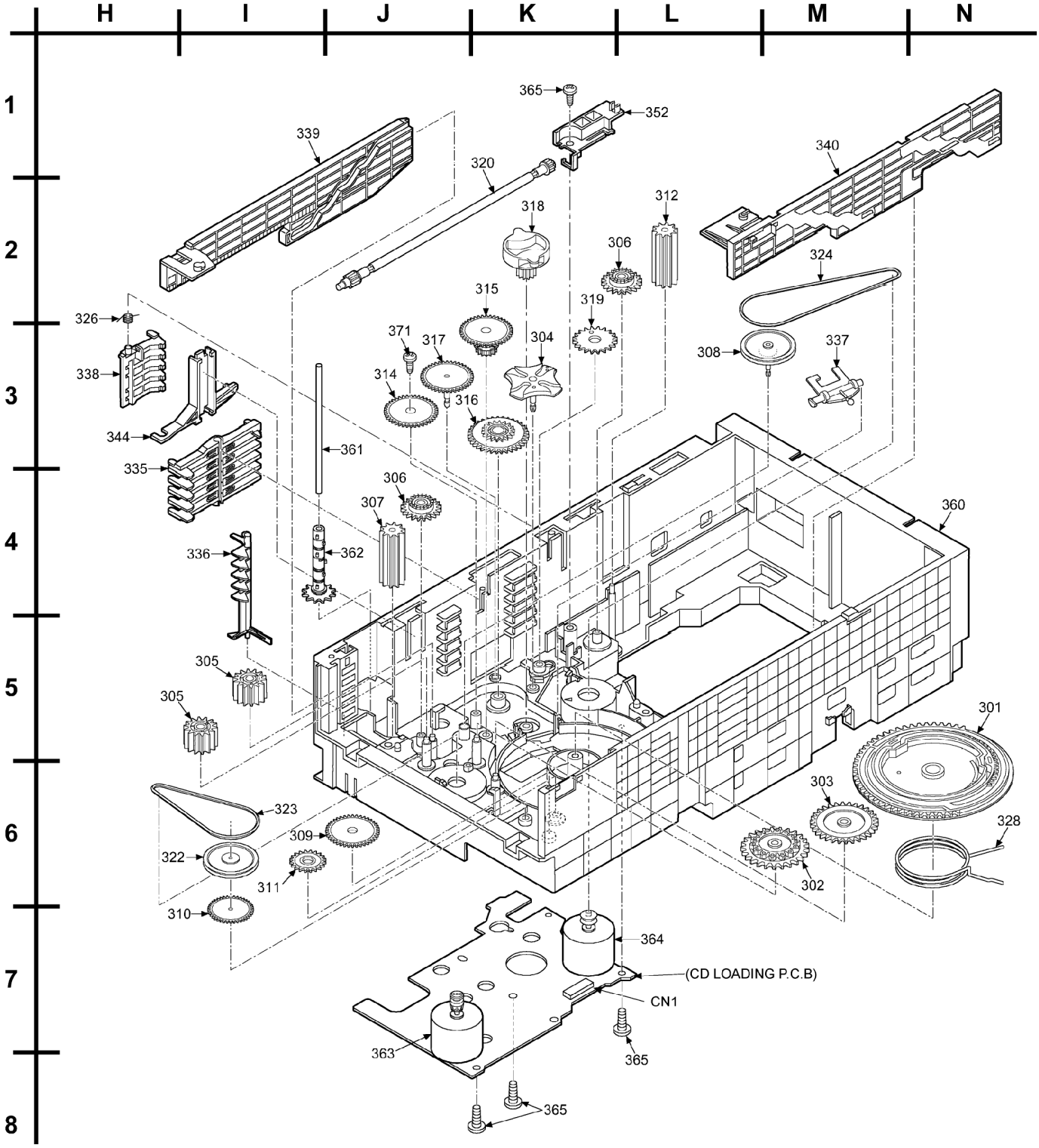
H
I
J
K
L
M
N
1
2
3
4
5
6
7
8
365
352
339
320
340
318
312
306
324
315
319
326
371
317
304
308
337
338
314
316
344
361
335
306
307
360
336
362
305
305
301
303
323
309
328
322
311
302
310
364
(CD LOADING P.C.B)
CN1
363
365
365

23.2.2. CD Loading Mechanism Parts List

Ref. No.	Part No.	Part Name & Description	Remarks
		TRAVERSE DECK	
301	RDG0519	MAIN GEAR	[M]
302	RDG0520	SPEED UP GEAR	[M]
303	RDG0521	REVERSE GEAR	[M]
304	RDG0522	GENEVA GEAR	[M]
305	RDG0523	HOR RELAY GEAR	[M]
306	RDG0525	CROWN GEAR	[M]
307	RDG0526	TRAY RELAY GEAR	[M]
308	RDG0527	UD PULLEY GEAR	[M]
309	RDG0528	HOR SPEED DOWN GEAR	[M]
310	RDG0529	HOR SPEED DOWN GEAR	[M]
311	RDG0530	HOR DRIVE GEAR	[M]
312	RDG0531	LOAD RELAY GEAR	[M]
313	RDG0532	LOAD GEAR	[M]
314	RDG0534	UD SPEED DOWN GEAR	[M]
315	RDG0535	UD SPEED DOWN GEAR	[M]
316	RDG0536	SELECT SPEED DOWN GEAR	[M]
317	RDG0537-1	SELECT DRIVE GEAR	[M]
318	RDG0538-1	CHANGE GEAR	[M]
319	RDG0539	UD DRIVE GEAR	[M]
320	RDG0540	TIMING GEAR	[M]
321	RDG0542	TRAY GEAR	[M]
322	RDG0543	HOR PULLEY GEAR	[M]
323	RDV0068	HOR BELT	[M]
324	RDV0069	UD BELT	[M]
325	RME0344-1	UD ASSIST SPRING	[M]
326	RME0361	TRAY STOPPER SPRING	[M]
327	RME0363-1	LIMIT SPRING	[M]
328	RME0368-1	MAIN GEAR SPRING	[M]
329	RML0616	SPEED UP LOCK	[M]
330	RML0617-2	SEPARATE LEVER 1	[M]
331	RML0618-1	SEPARATE LEVER 2	[M]
332	RML0619-1	UD. CONNECTION LEVER	[M]
333	RML0620	TRV.CONNECT LEVER	[M]
334	RML0621-2	TRAY CHANGE LEVER	[M]
335	RML0622-1	TRAY LOCK LEVER	[M]
336	RML0623	OPEN SW. LEVER	[M]
337	RML0624	CHG. LEVER	[M]
338	RML0637	TRAY STOPPER	[M]
339	RMM0239-1	UD RACK L	[M]
340	RMM0240	UD.RACK [R]	[M]
341	RMM0241-1	TRV SLIDE PLATE (L)	[M]
342	RMM0242-1	TRV SLIDE PLATE (R)	[M]
343	RMM0243-2	SELECT RACK PART	[M]
344	RMM0244	SELECT GUIDE	[M]
345	RMQ1051-2	PITCH PLATE PART	[M]
346	RMQ1209	UD BASE	[M]
347	RMQ1056	TRAY GUIDE [L]	[M]
348	RMQ1057	TRAY GUIDE [R]	[M]
349	RMQ1058	GEAR HOLDER	[M]
350	RMQ1059-2	TOP COVER	[M]
351	RMQ1060	CLAMP GUIDE	[M]
352	RMQ1061	TG.PLATE	[M]
353	RMR1531-X	FIXTURE	[M]
354	RMR1446-X	CLAMPER	[M]
355	RMR1407A-H1	TRAY	[M]
356	RMR1407B-H1	TRAY	[M]
357	RMR1407C-H1	TRAY	[M]
358	RMR1407D-H1	TRAY	[M]
359	RMR1407E-H1	TRAY	[M]
360	RFKNAPM77MDS	MECHA BASE ASS'Y	[M]
361	RMS0762	TRAY GEAR SHAFT	[M]
362	RXG0053	TRAY DRIVE GEAR ASSY	[M]
363	RXQ0803	LOADING MOTOR ASSY	[M]
364	RXQ0804	UD MOTOR ASSY	[M]
365	XTB3+10J	SCREW	[M]
366	RMC0472	TRAY SPRING	[M]
367	XTV2+6G	SCREW	[M]
368	XWG6FFY	BACKYOKE	[M]
369	JSM0048	MAGNET	[M]
370	RMC0387	SUPPORT SPRING	[M]
371	XTBS26+8J	SCREW	[M]
380	RAE2008W-S	DT68 TRV SUB UNIT	[M]
381	RMG0598A-K	FLOATING RUBBER	[M]
382	RMG0617-H	CUSHION RUBBER A	[M]
383	RMG0618-H	CUSHION RUBBER B	[M]
384	RMR1596-K	MIDDLE CHASSIS	[M]
386	RMS0789	FIXED PIN	[M]

23.3. Cabinet

23.3.1. Cabinet Parts Location

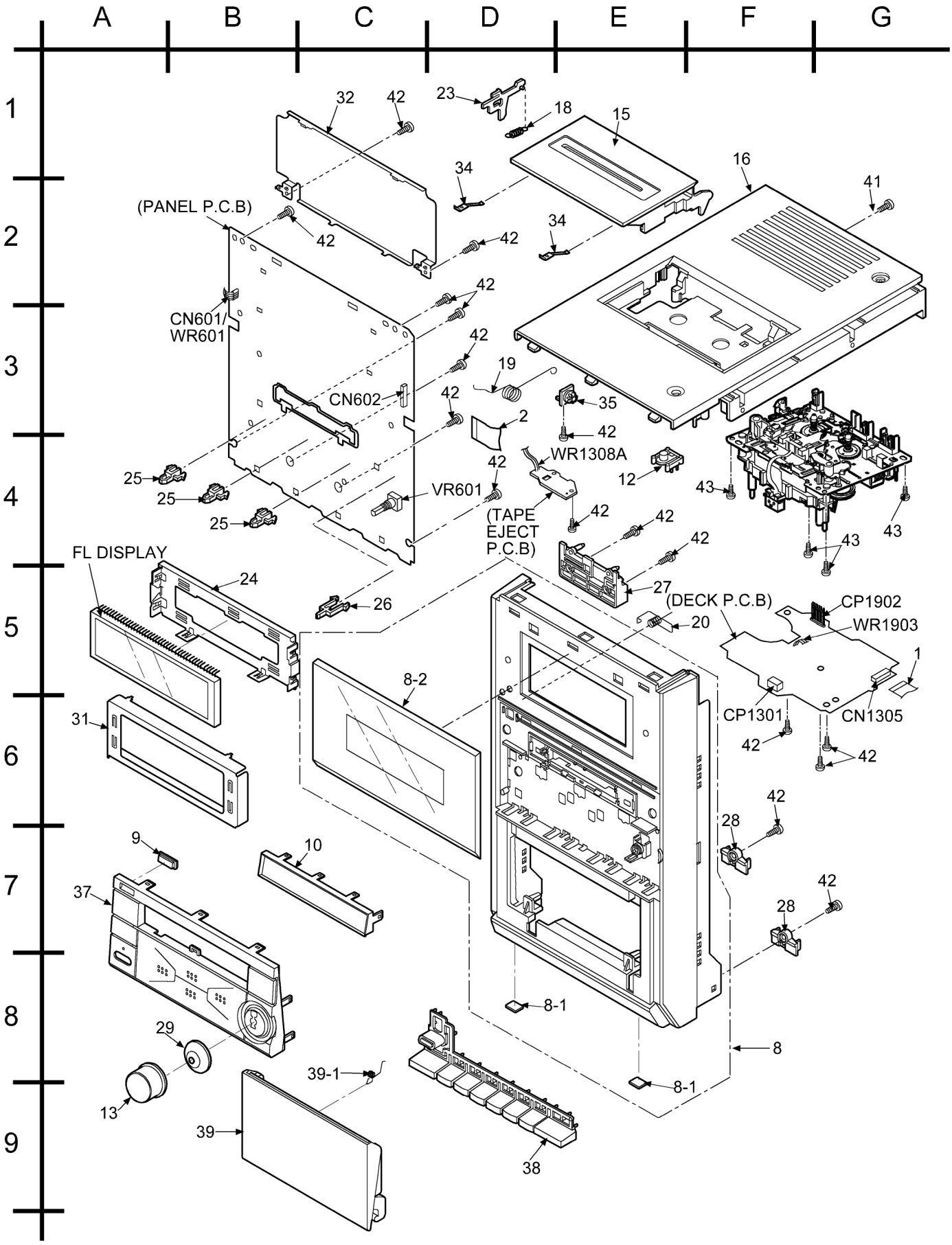

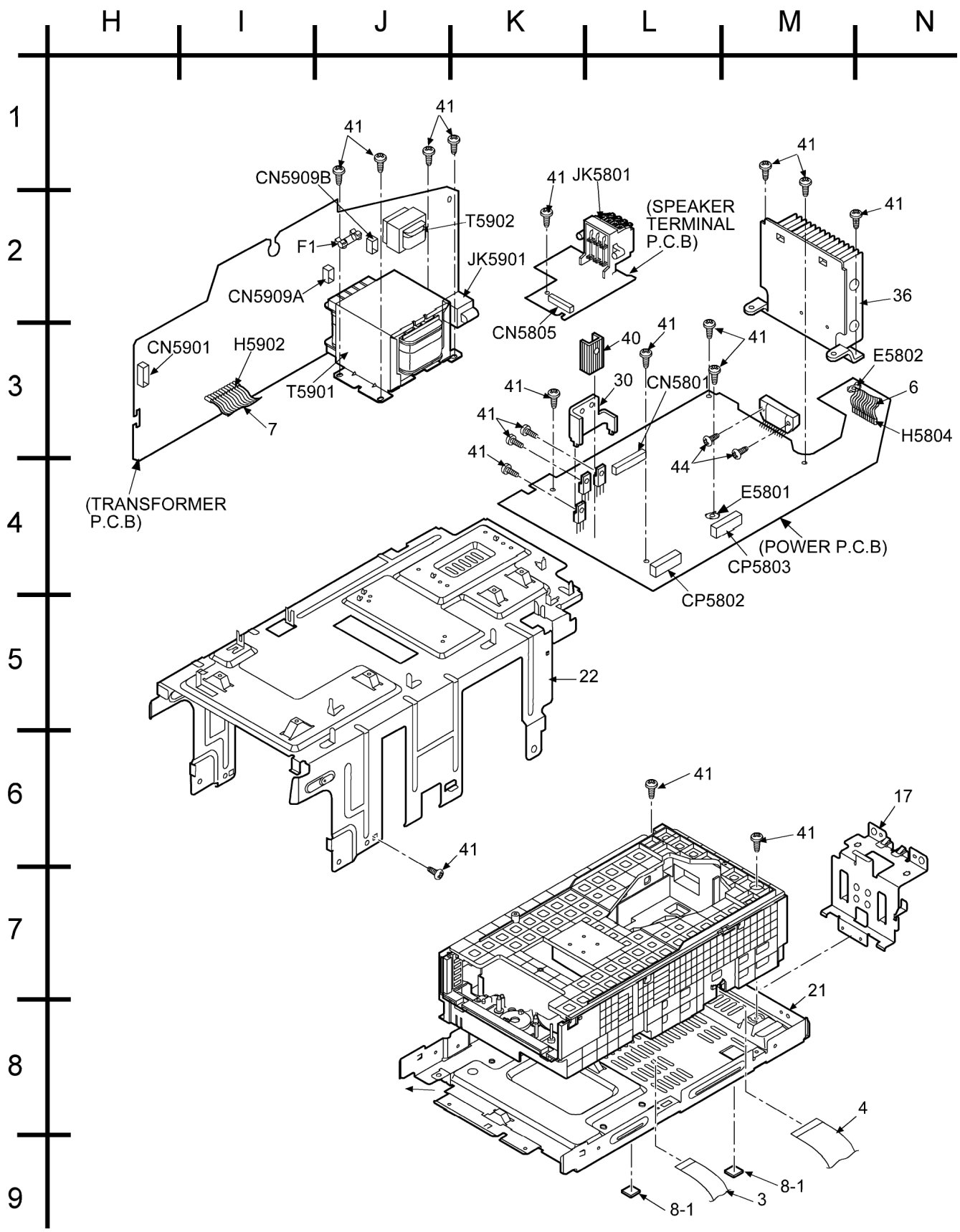
H
I
J
K
L
M
N
1
2
3
4
5
6
7
8
9
41
CN5909B
T5902
F1
JK5901
CN5909A
CN5901
H5902
T5901
7
(TRANSFORMER P.C.B)
JK5801
(SPEAKER TERMINAL P.C.B)
CN5805
40
30
CN5801
36
E5802
6
H5804
44
E5801
(POWER P.C.B)
CP5803
CP5802
22
17
21
4
8-1
3

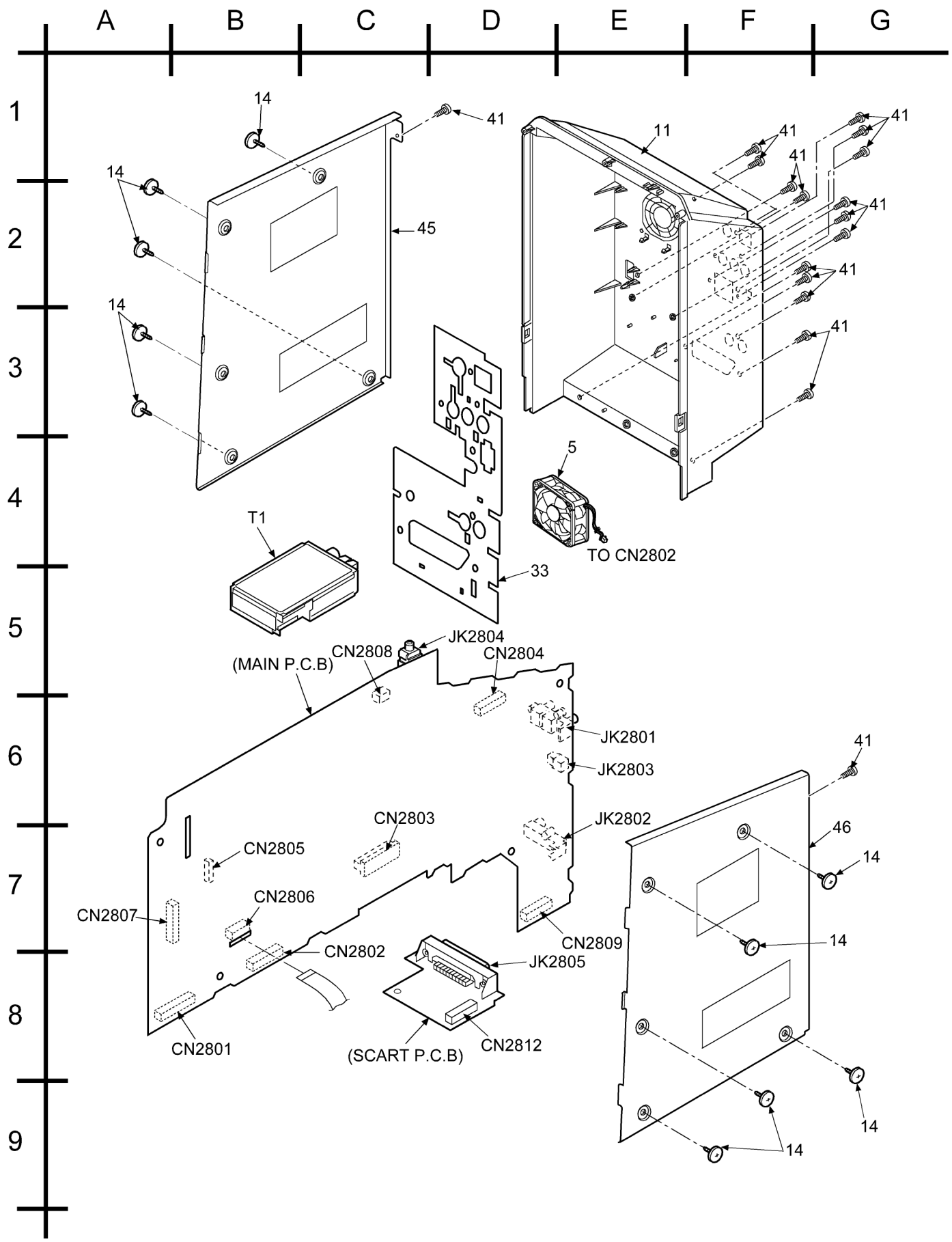
A
B
C
D
E
F
G
1
2
3
4
5
6
7
8
9
14
41
45
11
5
TO CN2802
T1
33
JK2804
CN2808
CN2804
(MAIN P.C.B)
JK2801
JK2803
JK2802
CN2803
CN2805
CN2806
CN2807
CN2802
CN2809
JK2805
CN2801
(SCART P.C.B)
CN2812
46

23.3.2. Cabinet & CD Loading Mechanism Parts List

Ref. No.	Part No.	Part Name & Description	Remarks
		CABINET AND CHASSIS	
1	REEX0325	21P FFC	[M]
2	REEX0326	16P FFC	[M]
3	REEX0327	FFC WIRE	[M]
4	REEX0328	FFC WIRE	[M]
5	REM0094A	COOLING FAN	[M]
6	REXX0399	8P WIRE	[M]
7	REXX0400	12P WIRE	[M]
8	RFKGAPM39DEB	FRONT PANEL ASS'Y	[M]
8-1	RHGV0008	LEG CUSHION	[M]
8-2	RGK1749A-S	FL WINDOW	[M]
9	RKW0755-W	SENSOR WINDOW	[M]
10	RFKNAPM39DEB	MD ORNAMENT ASS'Y	[M]
11	RFKHAPM39DEB	REAR CABINET ASS'Y	[M]EB
11	RKSX0056-H	REAR CABINET	[M]EG/ E
12	RGU2280-S	CASS EJECT BUTTON	[M]
13	RGW0404-S	VOLUME KNOB	[M]
14	RHD30007-1SJ	SCREW	[M]
15	RKF0688-S	CASS LID	[M]
16	RKM0507-S	TOP PANEL	[M]
17	RMAX0065	V/SELECTOR BRACKET	[M]
18	RMB0448-J	LOCK ROD SPRING	[M]
19	RMB0780	CASS OPEN SPRING	[M]
20	RMB0795	EARTH SPRING	[M]
21	RMK0595	BOTTOM CHASSIS	[M]
22	RMKX0090	INNER CHASSIS	[M]
23	RMM0163-1	CASSETTE LOCK ROD	[M]
24	RMN0772	FL HOLDER	[M]
25	RMN0773	LED HOLDER A	[M]
26	RMN0774	LED HOLDER B	[M]
27	RMN0775	MD HOLDER	[M]
28	RMN0780	CD LID SUPPORT	[M]
29	RMR1607-W	VOL. REF CASE	[M]
30	RMY0260	HEAT SINK	[M]
31	RSC0722	FL SHIELD A	[M]
32	RSC0728	FL SHIELD B	[M]
33	RSCX0090-1	REAR SHIELD PLATE	[M]
34	RUS757ZAA	CASS HALF SPRING	[M]
35	RXGX0003	DAMPER GEAR	[M]
36	RXXX0043	HEAT SINK UNIT	[M]
37	RYQ0484A-S	FUNCTION BTN UNIT	[M]
38	RYQ0485-Q	DISC BTN UNIT	[M]
39	RYQ0486-S	DVD LID UNIT	[M]
39-1	RMB0779	DVD LID SPRING	[M]
40	TUC25628	SMALL HEAT SINK	[M]
41	XTB3+10JFZ	SCREW	[M]
42	XTBS26+10J	SCREW	[M]
43	XTV3+10G	SCREW	[M]
44	XTW3+15T	SCREW	[M]
45	RKM0505A-S	SIDE PANEL (L)	[M]
46	RKM0506A-S	SIDE PANEL (R)	[M]

23.4. Electrical Parts List

Ref. No.	Part No.	Part Name & Description	Remarks
		PRINTED CIRCUIT BOARD	
	REP3654W	DVD MODULE P.C.B. (SIDE: A)	[M](RTL)
	REP3654W	DVD MODULE P.C.B. (SIDE: B)	[M](RTL)
	REPX0410A	MAIN P.C.B.	[M](RTL)
	REPX0409A	PANEL P.C.B.	[M](RTL)
	REPX0408A	SPEAKER P.C.B.	[M](RTL)E/EG
	REPX0408E	SPEAKER P.C.B.	[M](RTL)EB
	REPX0410A	SCART P.C.B.	[M](RTL)
	REPX0408A	POWER P.C.B.	[M](RTL)E/EG
	REPX0408E	POWER P.C.B.	[M](RTL)EB
	REPX0408A	TRANSFORMER P.C.B.	[M](RTL)E/EG
	REPX0408E	TRANSFORMER P.C.B.	[M](RTL)EB
	REPX0411A	DECK P.C.B.	[M](RTL)
	REPX0411A	TAPE EJECT P.C.B.	[M](RTL)
	REPX0321C	DECK MECHANISM P.C.B.	[M](RTL)
	REP3569A	CD LOADING P.C.B.	[M](RTL)
		INTERGRATED CIRCUIT	
IC11	C0GAG0000007	IC UP/DOWN MOTOR DRIVE	[M]
IC21	C0GAG0000007	IC LOADING MOTOR DRIVE	[M]
IC601	C0HBB0000039	IC FL DISPLAY	[M]
IC971	CNB13030R2AU	IC PHOTO INTERRUPTER	[M]
IC1000	C1AA00000612	IC ANALOG SWITCH	[M]
IC1001	AN7326K	IC P/B REC AMP	[M]
IC2801	C2CBJG000403	IC MICRO-P	[M]
IC2803	C0DBAJG00002	IC REGULATOR	[M]
IC2804	C0DBAJG00002	IC REGULATOR	[M]
IC2805	C0DBEFG00003	IC REGULATOR	[M]
IC2806	C0DBZHG00016	IC REGULATOR	[M]
IC2807	C0DBZHE00011	IC REGULATOR	[M]
IC2808	C9ZB00000431	IC VIDEO	[M]
IC2809	C1AB00001731	IC VIDEO SWITCH	[M]
IC2810	C1AB00001731	IC VIDEO SWITCH	[M]
IC2811	C1BB00000715	IC RDS	[M]
IC2812	C1BB00000822	IC ASP	[M]
IC2813	C0AABB000085	IC OP AMP	[M]
IC2814	KIA4558FEL	IC OP AMP	[M]
IC5801	RSN314H41A-P	IC POWER AMP	[M]
IC8001	MN2DS0003APH	IC DV2.1 LSI	[M]
IC8051	C3ABPG000067	IC 64MB SDRAM	[M]
IC8111	C0CBCBD00018	IC POWER SUPPLY	[M]
IC8251	C0GBG0000044	IC MOTOR DRIVE	[M]
IC8271	C0GBF0000004	IC MOTOR DRIVE	[M]
IC8421	C0FBBK000035	IC A/D CONVERTER	[M]
IC8601	C0EBE0000384	IC VOLTAGE DETECTING	[M]
IC8605	C0EBA0000031	IC RESET	[M]
IC8651	RFKFMH81T160	IC FLASH ROM	[SPC]
IC8691	C0JBCA000066	IC AND GATE LOGIC	[M]
IC8695	C0JBCA000066	IC AND GATE LOGIC	[M]
		TRANSISTORS	
Q1	B3NAA0000068	TRANSISTOR	[M]
Q601	KTC3875GRTA	TRANSISTOR	[M]
Q602	KTC3875GRTA	TRANSISTOR	[M]
Q603	KTC3875GRTA	TRANSISTOR	[M]
Q611	KRC107STA	TRANSISTOR	[M]
Q1101	2SD2114K1V	TRANSISTOR	[M]
Q1201	2SD2114K1V	TRANSISTOR	[M]
Q1302	B1GDCFJJ0002	TRANSISTOR	[M]
Q1303	B1GBCFGH0001	TRANSISTOR	[M]
Q1304	B1GDCFGH0002	TRANSISTOR	[M]
Q1306	B1ABCF000011	TRANSISTOR	[M]

Ref. No.	Part No.	Part Name & Description	Remarks
Q1307	B1ABCF000011	TRANSISTOR	[M]
Q1309	B1AAGC000006	TRANSISTOR	[M]
Q1310	B1AAGC000006	TRANSISTOR	[M]
Q1312	B1ABCF000011	TRANSISTOR	[M]
Q1314	B1GDCFGH0002	TRANSISTOR	[M]
Q1315	KTA12710YTA	TRANSISTOR	[M]
Q1316	2SD09650RA	TRANSISTOR	[M]
Q1317	2SD2114K1V	TRANSISTOR	[M]
Q2101	KTC3875GRTA	TRANSISTOR	[M]
Q2102	B1ABGC000005	TRANSISTOR	[M]
Q2103	B1ABGC000005	TRANSISTOR	[M]
Q2201	KTC3875GRTA	TRANSISTOR	[M]
Q2202	B1ABGC000005	TRANSISTOR	[M]
Q2203	B1ABGC000005	TRANSISTOR	[M]
Q2803	KRC103STA	TRANSISTOR	[M]
Q2805	UNR221200L	TRANSISTOR	[M]
Q2806	2SB0621AHA	TRANSISTOR	[M]
Q2807	KTC3875GRTA	TRANSISTOR	[M]
Q2808	KTC3875GRTA	TRANSISTOR	[M]
Q2809	KTC3875GRTA	TRANSISTOR	[M]
Q2810	B1CABA000002	TRANSISTOR	[M]
Q2811	B1CABA000002	TRANSISTOR	[M]
Q2812	KRA102MTA	TRANSISTOR	[M]
Q2813	KRC102STA	TRANSISTOR	[M]
Q2814	KTA1504GRTA	TRANSISTOR	[M]
Q2815	KTA1504GRTA	TRANSISTOR	[M]
Q2816	B1ABGC000005	TRANSISTOR	[M]
Q2817	KRC101STA	TRANSISTOR	[M]
Q2818	KRC101STA	TRANSISTOR	[M]
Q2819	UNR211500L	TRANSISTOR	[M]
Q2820	KRC107STA	TRANSISTOR	[M]
Q2821	KTC3199GRTA	TRANSISTOR	[M]
Q2822	KTC3205YTA	TRANSISTOR	[M]
Q2823	KRC107STA	TRANSISTOR	[M]
Q2826	KRC102STA	TRANSISTOR	[M]
Q2827	KTC32030YTA	TRANSISTOR	[M]
Q5101	KTC3199GRTA	TRANSISTOR	[M]
Q5102	KTC3199GRTA	TRANSISTOR	[M]
Q5201	KTC3199GRTA	TRANSISTOR	[M]
Q5202	KTC3199GRTA	TRANSISTOR	[M]
Q5801	KTC2026	TRANSISTOR	[M]
Q5802	KTA1046	TRANSISTOR	[M]
Q5803	KTC3199GRTA	TRANSISTOR	[M]
Q5804	KTA1046	TRANSISTOR	[M]
Q5805	KRA110MTA	TRANSISTOR	[M]
Q5806	2SD0592ARA	TRANSISTOR	[M]
Q5807	B1ACCF000039	TRANSISTOR	[M]
Q5808	KTC3199GRTA	TRANSISTOR	[M]
Q5809	KTC3199GRTA	TRANSISTOR	[M]
Q5810	B1AAGC000007	TRANSISTOR	[M]
Q5901	2SB0621AHA	TRANSISTOR	[M]
Q5902	B1AAGC000007	TRANSISTOR	[M]
Q5903	KRC102MTA	TRANSISTOR	[M]
Q5904	2SD21370PA	TRANSISTOR	[M]
Q8550	2SB1219AHL	TRANSISTOR	[M]
Q8551	2SD1819A0L	TRANSISTOR	[M]
Q8552	2SB09700RL	TRANSISTOR	[M]
Q8560	2SD1819A0L	TRANSISTOR	[M]
Q8561	2SD1819A0L	TRANSISTOR	[M]
Q8562	2SB09700RL	TRANSISTOR	[M]
Q8605	2SD1819A0L	TRANSISTOR	[M]
Q8606	2SD1819A0L	TRANSISTOR	[M]
QR8420	UNR521100L	TRANSISTOR	[M]
QR8571	UNR511V00L	TRANSISTOR	[M]
		DIODES	
D601	UDZSTE176R2B	DIODE	[M]
D611	B3AEA0000041	DIODE	[M]
D612	B3AEA0000041	DIODE	[M]
D613	B3AEA0000041	DIODE	[M]

Ref. No.	Part No.	Part Name & Description	Remarks
D614	B3AEA0000041	DIODE	[M]
D616	B3AAA0000583	DIODE	[M]
D617	B0BC8R100004	DIODE	[M]
D618	B0BC8R100004	DIODE	[M]
D619	B0BC8R100004	DIODE	[M]
D620	UDZSTE178R2B	DIODE	[M]
D971	MA2C16500E	DIODE	[M]
D1301	B0ACCK000005	DIODE	[M]
D2101	MA2J72800L	DIODE	[M]
D2201	MA2J72800L	DIODE	[M]
D2801	1SS380TE-17	DIODE	[M]
D2802	1SS380TE-17	DIODE	[M]
D2803	B0ACCK000005	DIODE	[M]
D2804	B0JCPC000004	DIODE	[M]
D2805	B0BC7R500001	DIODE	[M]
D2806	B0JCPC000004	DIODE	[M]
D2807	B0BC7R500001	DIODE	[M]
D2809	B0ACCK000005	DIODE	[M]
D2810	B0ACCK000005	DIODE	[M]
D2811	B0ACCK000005	DIODE	[M]
D2812	1SS380TE-17	DIODE	[M]
D2813	B0ACCK000005	DIODE	[M]
D2814	B0ACCK000005	DIODE	[M]
D2815	B0BC5R600003	DIODE	[M]
D5801	B0FBAM000012	DIODE	[M]
D5802	B0EAKM000117	DIODE	[M]
D5803	B0AACK000004	DIODE	[M]
D5804	B0AACK000004	DIODE	[M]
D5805	B0AACK000004	DIODE	[M]
D5806	B0AACK000004	DIODE	[M]
D5807	B0AACK000004	DIODE	[M]
D5808	B0BA9R600002	DIODE	[M]EG/ E
D5808	B0BC9R000008	DIODE	[M]EB
D5809	MTZJ13BTA	DIODE	[M]
D5812	B0BA9R600002	DIODE	[M]EG/ E
D5812	MTZJ15BTA	DIODE	[M]EB
D5813	B0AACK000004	DIODE	[M]
D5814	B0AACK000004	DIODE	[M]
D5815	B0EAKM000117	DIODE	[M]
D5816	B0EAKM000117	DIODE	[M]
D5817	B0EAKM000117	DIODE	[M]
D5818	MTZJ15BTA	DIODE	[M]
D5819	B0AACK000004	DIODE	[M]
D5901	B0EAKM000117	DIODE	[M]
D5902	B0EAKM000117	DIODE	[M]
D5903	B0BA03100002	DIODE	[M]
D5904	B0EAKM000117	DIODE	[M]
D5905	B0EAKM000117	DIODE	[M]
D5906	B0EAKM000117	DIODE	[M]
D5907	B0EAKM000117	DIODE	[M]
D5908	B0AACK000004	DIODE	[M]
D5909	B0EAKM000117	DIODE	[M]
D5910	B0EAKM000117	DIODE	[M]
D5911	B0EAKM000117	DIODE	[M]
D5912	B0EAKM000117	DIODE	[M]
D5913	B0BA6R600008	DIODE	[M]
D5917	B0EAKM000117	DIODE	[M]
D8550	MA2S11100L	DIODE	[M]
D8571	MA2J72800L	DIODE	[M]
		CHIP INDUCTORS	
LB8001	J0JHC0000045	CHIP INDUCTOR	[M]
LB8002	J0JHC0000045	CHIP INDUCTOR	[M]
LB8011	ERJ3GEYJ220V	22 1/16W	[M]
LB8271	ERJ3GEY0R00V	0 1/16W	[M]
LB8272	ERJ3GEY0R00V	0 1/16W	[M]
LB8273	ERJ3GEY0R00V	0 1/16W	[M]
LB8301	J0JCC0000119	FERRITE BEAD	[M]
LB8302	J0JCC0000119	FERRITE BEAD	[M]
LB8303	J0JCC0000119	FERRITE BEAD	[M]
LB8304	J0JCC0000119	FERRITE BEAD	[M]
LB8305	J0JCC0000119	FERRITE BEAD	[M]
LB8401	ERJ3GEYJ151V	CHIP RESISTOR	[M]

Ref. No.	Part No.	Part Name & Description	Remarks
LB8420	J0JCC0000091	FILTER	[M]
LB8421	J0JCC0000119	FERRITE BEAD	[M]
LB8422	J0JCC0000119	FERRITE BEAD	[M]
LB8423	ERJ3GEY0R00V	0 1/16W	[M]
LB8424	J0JCC0000091	FILTER	[M]
LB8491	J0JCC0000119	FERRITE BEAD	[M]
LB8501	ERJ3GEYJ222V	2.2K 1/16W	[M]
LB8502	J0JHC0000045	CHIP INDUCTOR	[M]
LB8503	ERJ3GEY0R00V	0 1/16W	[M]
LB8504	J0JCC0000091	FILTER	[M]
LB8505	J0JCC0000091	FILTER	[M]
LB8506	ERJ3GEYJ152V	1.5K 1/16W	[M]
LB8507	J0JCC0000091	FILTER	[M]
LB8511	ERJ3GEY0R00V	0 1/16W	[M]
LB8512	ERJ3GEY0R00V	0 1/16W	[M]
LB8513	ERJ3GEY0R00V	0 1/16W	[M]
LB8514	ERJ3GEY0R00V	0 1/16W	[M]
LB8690	J0JCC0000091	FILTER	[M]
LB8691	ERJ3GEYJ101V	100 1/16W	[M]
LB8692	ERJ3GEYJ101V	100 1/16W	[M]
LB8693	ERJ3GEYJ101V	100 1/16W	[M]
		VARIABLE RESISTOR	
VR601	EVEJ1F42124B	ENCODER	[M]
		SWITCHES	
S1	K0L1BA000065	SW STOCK	[M]
S2	K0L1BA000065	SW PLAY	[M]
S3	K0L1BA000078	SW BOTTOM	[M]
S4	RSH1A045-1A	SW OPEN	[M]
S5	K0L1BA000065	SW CHANGE	[M]
S602	EVQ11G09K	SW ADV SUR	[M]
S603	EVQ11G09K	SW OPEN/ CLOSE	[M]
S604	EVQ11G09K	SW DISC 5	[M]
S605	EVQ11G09K	SW DISC 4	[M]
S606	EVQ11G09K	SW DISC 3	[M]
S607	EVQ11G09K	SW DISC 2	[M]
S608	EVQ11G09K	SW POWER	[M]
S609	EVQ11G09K	SW DISC CECI	[M]
S610	EVQ11G09K	SW DISC_CHANGE	[M]
S611	EVQ11G09K	SW RE_MASTER	[M]
S613	EVQ11G09K	SW TUNER/ AUX	[M]
S614	EVQ11G09K	SW DVD/CD	[M]
S615	EVQ11G09K	SW STOP	[M]
S616	EVQ11G09K	SW TAPE	[M]
S617	EVQ11G09K	SW REC	[M]
S618	EVQ11G09K	SW DISC 1	[M]
S971	RSH1A018-3U	SW MODE	[M]
S972	RSH1A019-2U	SW HALF	[M]
S973	RSH1A019-2U	SW ATS/ CRO2	[M]
S974	RSH1A019-2U	SW RECINH_R	[M]
S975	RSH1A019-2U	SW RECINH_F	[M]
S1901	EVQ21405RJ	SW TAPE EJECT	[M]
		CONNECTORS	
CN1	K1MN14B00066	14P FFC CONNECTOR	[M]
CN601	K1ZZ00000832	CONNECTOR	[M]
CN602	K1MN16A00042	16P CONNECTOR	[M]
CN1305	K1MN21B00010	21P FFC CONNECTOR	[M]
CN2801	K1KB12B00036	12P CONNECTOR	[M]
CN2802	K1KB12B00036	12P CONNECTOR	[M]
CN2803	K1MN50A00008	50P CONNECTOR	[M]
CN2804	K1KA10A00263	10P CONNECTOR	[M]
CN2805	K1MN16A00042	16P CONNECTOR	[M]
CN2806	K1MN14C00004	14P FFC CONNECTOR	[M]
CN2807	K1MN21A00031	21P CONNECTOR	[M]
CN2808	K1KA02A00008	2P CONNECTOR	[M]
CN2809	K1KA12A00184	12P CONNECTOR	[M]
CN2812	K1KB12B00036	12P CONNECTOR	[M]
CN5801	RJT119W12V	12P CONNECTOR	[M]
CN5805	RJT119W08V	8P CONNECTOR	[M]

Ref. No.	Part No.	Part Name & Description	Remarks
CN5901	K1KA04B00132	4P CONNECTOR	[M]
CN5909	REXX0320	2P STANDBY WIRE	[M]
CP1301	RJS1A6805-J	CONNECTOR	[M]
CP1902	K1KA09B00058	9P CONNECTOR	[M]
CP5802	K1KA12A00184	9P CONNECTOR	[M]
CP5803	K1KA12A00184	12P CONNECTOR	[M]
CS971	RJU071H09M1	CONNECTOR	[M]
FP8101	K1MN50B00031	50P CONNECTOR	[M]
FP8271	K1MN15B00041	15P CONNECTOR	[M]
FP8501	K1MN26B00094	26P CONNECTOR	[M]
		COILS & TRANSFORMERS	
L1301	7L1A62N	BIAS OCS COIL	[M]
L1302	RLQB470JTD-D	RF CHOKE COIL	[M]
L2101	J0JBC0000019	CHIP INDUCTOR	[M]
L2201	J0JBC0000019	CHIP INDUCTOR	[M]
L2801	G0C3R3JA0027	COIL	[M]
L2802	G0A101ZA0028	CHOKE COIL	[M]
L2803	G0A200D00002	RF CHOKE COIL	[M]
L2804	G0A200D00002	RF CHOKE COIL	[M]
L2805	G0A200D00002	RF CHOKE COIL	[M]
L2806	G0A101ZA0028	CHOKE COIL	[M]
L2807	G0A200D00002	RF CHOKE COIL	[M]
L2809	G0C220JA0019	COIL	[M]
L2810	J0JBC0000015	CHIP INDUCTOR	[M]
L2811	J0JBC0000015	CHIP INDUCTOR	[M]
L2812	J0JBC0000015	CHIP INDUCTOR	[M]
L2813	J0JCC0000186	CHIP COIL	[M]
L2814	J0JBC0000015	CHIP INDUCTOR	[M]
L2815	J0JBC0000015	CHIP INDUCTOR	[M]
L2816	J0JBC0000015	CHIP INDUCTOR	[M]
L2817	G0C101JA0030	COIL	[M]
L2818	G0C101JA0030	COIL	[M]
L2819	G0C101JA0030	COIL	[M]
L2820	J0JBC0000019	CHIP INDUCTOR	[M]
L2821	ELJFC2R2KF	CHIP COIL	[M]
L2822	ELJFC2R2KF	CHIP COIL	[M]
L2823	ELJFC2R2KF	CHIP COIL	[M]
L2824	G0C4R7K00004	AXIAL COIL	[M]
L2825	J0JCC0000120	COIL	[M]
L2826	J0JCC0000120	COIL	[M]
L2827	J0JCC0000120	COIL	[M]
L2828	J0JCC0000120	COIL	[M]
L2840	G0A200D00002	RF CHOKE COIL	[M]
L2841	ERJ6GEY0R00V	0 1/10W	[M]
L2911	ELJFCR39KF	CHIP INDUCTOR	[M]
L5101	G0AR76Y00001	COIL	[M]
L5102	G0AR76Y00001	COIL	[M]
L5201	G0AR76Y00001	COIL	[M]
L5202	G0AR76Y00001	COIL	[M]
L5901	RLQZ371	CHOKE COIL	[M]
L8201	G1C100K00020	CHIP INDUCTOR	[M]
L8202	J0JCC0000079	CHIP INDUCTOR	[M]
L8301	G1C100KA0055	CHIP INDUCTOR	[M]
L8302	J0JCC0000079	CHIP INDUCTOR	[M]
L8420	G1C220KA0055	CHIP INDUCTOR	[M]
L8550	G1C100KA0055	CHIP INDUCTOR	[M]
T1	ENG07802QF	TUNER PACK	[M]
T5901	G4C6AFK00005	TRANSFORMER	[M] ⚠
T5902	RTP1H3E002	BACK-UP TRANSFORMER	[M] ⚠
		COMPONENT COMBINATIONS	
Z602	B3RAD0000073	REMOTE SENSOR	[M]
Z971	RGSD12A1445T	RADA RESISTOR	[M]
Z5901	ERZV10V511CS	ZENER	[M] ⚠
		RELAY	

Ref. No.	Part No.	Part Name & Description	Remarks
RL5901	K6B1AEA00003	POWER RELAY	[M] ⚠
		OSCILLATORS	
X2801	H0A327200073	CRYSTAL OSCILLATOR	[M]
X2802	H2B100500004	CERAMIC RESONATOR	[M]
X2803	H0H433400001	CRYSTAL	[M]
X8621	H0J270500064	CRYSTAL	[M]
		DISPLAY TUBES	
FL601	A2BB00000125	FL DISPLAY	[M]
FL8101	F1H0J1050022	1 6.3V	[M]
FL8102	F1H0J1050022	1 6.3V	[M]
FL8103	F1H0J1050022	1 6.3V	[M]
FL8104	F1J1E1040022	0.1 25V	[M]
		FUSE	
F1	K5D801BK0007	800MA FUSE	[M] ⚠
		FUSE HOLDERS	
FC1	EYF52BC	FUSE HOLDER	[M]
FC2	EYF52BC	FUSE HOLDER	[M]
		FUSE PROTECTORS	
FP5801	K5G400A00001	RESISTOR	[M] ⚠
FP5901	K5G402AA0002	FUSE PROTECTOR	[M] ⚠
FP5902	K5G102AA0002	FUSE PROTECTOR	[M] ⚠
		HOLDERS	
H5804	K1YF08000003	8P WIRE HOLDER	[M]
H5902	K1YF12000002	12P WIRE HOLDER	[M]
		JACKS	
JK2801	K2HA306B0080	JK 3P RCA	[M]
JK2802	K1U208B00002	JACK	[M]
JK2803	K7AABB000002	JK OPTICAL JACK	[M]
JK2804	K2HC103B0049	JK HEADPHONE	[M]
JK2805	K1FB121B0012	JK RGB CONNECTOR	[M]
JK5801	K4BC08B00013	JK SPEAKER	[M]
JK5901	K2AA2B000004	JK AC INLET	[M] ⚠
		EARTH TERMINALS	
E601	K9ZZ00000424	EARTH TERMINAL	[M]
E602	K9ZZ00000424	EARTH TERMINAL	[M]
E5801	SNE1004-2	EARTH TERMINAL	[M]
E5802	SNE1004-2	EARTH TERMINAL	[M]
		CHIP RESISTORS	
W5868	ERX1SZJR18P	0.18 1W	[M]
W5869	ERX1SZJR18P	0.18 1W	[M]
		WIRES	
WR308B	RWJ0102110SS	2P MTR WIRE	[M]
WR601	REXX0398	4P WIRE	[M]
WR1903	RWJ0102050KR	2P (MOTOR WIRE)	[M]
		RESISTORS	
R601	ERJ3GEYJ102V	1K 1/16W	[M]
R602	ERJ3GEYJ102V	1K 1/16W	[M]
R603	D0GB122JA019	1.2K 1/16W	[M]
R604	ERJ3GEYJ182V	1.8K 1/16W	[M]
R605	ERJ3GEYJ222V	2.2K 1/16W	[M]
R606	D0GB272JA002	2.7K 1/16W	[M]
R607	ERJ3GEYJ102V	1K 1/16W	[M]

Ref. No.	Part No.	Part Name & Description	Remarks
R608	ERJ3GEYJ102V	1K 1/16W	[M]
R609	D0GB122JA019	1.2K 1/16W	[M]
R610	ERJ3GEYJ182V	1.8K 1/16W	[M]
R611	ERJ3GEYJ222V	2.2K 1/16W	[M]
R612	D0GB272JA002	2.7K 1/16W	[M]
R613	ERJ3GEYJ472V	4.7K 1/16W	[M]
R614	ERJ3GEYJ682V	6.8K 1/16W	[M]
R615	ERJ3GEYJ103V	10K 1/16W	[M]
R616	ERJ3GEYJ472V	4.7K 1/16W	[M]
R617	D0GB562JA002	5.6K 1/16W	[M]
R618	D0GB101JA002	100 1/16W	[M]
R619	ERJ3GEYJ470V	47 1/16W	[M]
R621	ERJ3GEYJ151V	150 1/16W	[M]
R622	ERJ3GEYJ151V	150 1/16W	[M]
R623	ERJ3GEYJ104V	100K 1/16W	[M]
R624	ERJ3GEYJ104V	100K 1/16W	[M]
R625	ERJ3GEYJ102V	1K 1/16W	[M]
R626	ERJ3GEYJ102V	1K 1/16W	[M]
R627	ERJ3GEYJ102V	1K 1/16W	[M]
R628	ERJ3GEYJ102V	1K 1/16W	[M]
R629	ERJ3GEYJ103V	10K 1/16W	[M]
R631	ERJ3GEYJ102V	1K 1/16W	[M]
R632	ERJ3GEYJ102V	1K 1/16W	[M]
R633	ERJ3GEYJ102V	1K 1/16W	[M]
R634	ERJ3GEYJ102V	1K 1/16W	[M]
R635	D0GB821JA002	820 1/16W	[M]
R636	D0GB821JA002	820 1/16W	[M]
R637	ERJ3GEYJ102V	1K 1/16W	[M]
R638	ERJ3GEYJ102V	1K 1/16W	[M]
R643	ERJ3GEYJ102V	1K 1/16W	[M]
R644	D0GB821JA002	820 1/16W	[M]
R645	ERJ3GEYJ472V	4.7K 1/16W	[M]
R652	ERJ3GEYJ333V	33K 1/16W	[M]
R653	ERJ3GEYJ102V	1K 1/16W	[M]
R670	ERJ3GEY0R00V	0 1/16W	[M]
R671	ERJ3GEY0R00V	0 1/16W	[M]
R972	ERDS2TJ821T	820 1/4W	[M]
R973	ERDS2TJ393T	39K 1/4W	[M]
R1061	ERJ3GEY0R00V	0 1/16W	[M]
R1062	ERJ3GEY0R00V	0 1/16W	[M]
R1063	ERJ3GEY0R00V	0 1/16W	[M]
R1101	ERJ3GEYJ330V	33 1/16W	[M]
R1102	ERJ3GEYJ152V	1.5K 1/16W	[M]
R1103	ERJ3GEYJ183V	18K 1/16W	[M]
R1104	ERJ3GEYJ103V	10K 1/16W	[M]
R1105	ERJ3GEYJ222V	2.2K 1/16W	[M]
R1106	ERJ3GEYJ104V	100K 1/16W	[M]
R1107	ERJ3GEYJ102V	1K 1/16W	[M]
R1109	ERJ3GEYJ102V	1K 1/16W	[M]
R1110	ERJ3GEYJ333V	33K 1/16W	[M]
R1201	ERJ3GEYJ330V	33 1/16W	[M]
R1202	ERJ3GEYJ152V	1.5K 1/16W	[M]
R1203	ERJ3GEYJ183V	18K 1/16W	[M]
R1204	ERJ3GEYJ103V	10K 1/16W	[M]
R1205	ERJ3GEYJ222V	2.2K 1/16W	[M]
R1206	ERJ3GEYJ104V	100K 1/16W	[M]
R1207	ERJ3GEYJ102V	1K 1/16W	[M]
R1209	ERJ3GEYJ102V	1K 1/16W	[M]
R1210	ERJ3GEYJ333V	33K 1/16W	[M]
R1302	ERJ3GEYJ471V	470 1/16W	[M]
R1303	ERJ3GEYJ475V	4.7M 1/16W	[M]
R1304	ERJ3GEYJ223V	22K 1/16W	[M]
R1305	ERJ3GEYJ103V	10K 1/16W	[M]
R1309	ERDS1FVJ471T	470 1/2W	[M]
R1313	ERJ3GEYJ103V	10K 1/16W	[M]
R1314	ERJ3GEYJ102V	1K 1/16W	[M]
R1318	ERJ3GEYJ103V	10K 1/16W	[M]
R1319	ERJ3GEYJ123V	12K 1/16W	[M]
R1320	ERJ3GEYJ104V	100K 1/16W	[M]
R1321	D0GB470JA008	47 1/16W	[M]
R1322	D0GB823JA002	82K 1/16W	[M]
R1327	ERJ3GEYJ472V	4.7K 1/16W	[M]
R1328	ERJ3GEYJ153V	15K 1/16W	[M]
R1329	ERJ3GEYJ472V	4.7K 1/16W	[M]

Ref. No.	Part No.	Part Name & Description	Remarks
R1330	ERD2FCVJ4R7T	4.7 1/4W	[M]
R1331	ERJ3GEYJ752V	7.5K 1/16W	[M]
R1332	ERJ3GEYJ103V	10K 1/16W	[M]
R1333	ERD2FCVJ4R7T	4.7 1/4W	[M]
R1334	ERJ3GEYJ223V	22K 1/16W	[M]
R1335	ERJ3GEYJ152V	1.5K 1/16W	[M]
R1337	ERJ3GEYJ103V	10K 1/16W	[M]
R1338	ERJ3GEYJ472V	4.7K 1/16W	[M]
R1341	ERJ3GEYJ471V	470 1/16W	[M]
R1342	ERJ3GEYJ473V	47K 1/16W	[M]
R1343	ERJ3GEYJ332V	3.3K 1/16W	[M]
R1344	ERJ3GEYJ273V	27K 1/16W	[M]
R1345	ERJ3GEYJ102V	1K 1/16W	[M]
R1371	ERJ3GEYJ223V	22K 1/16W	[M]
R1374	ERJ3GEYJ471V	470 1/16W	[M]
R1380	ERJ3GEY0R00V	0 1/16W	[M]
R2001	ERJ3GEYJ103V	10K 1/16W	[M]
R2002	D0GB101JA002	100 1/16W	[M]
R2003	ERJ3GEY0R00V	0 1/16W	[M]
R2005	ERJ3GEYJ102V	1K 1/16W	[M]
R2006	ERJ3GEYJ102V	1K 1/16W	[M]
R2007	ERJ3GEYJ102V	1K 1/16W	[M]
R2008	ERJ3GEYJ103V	10K 1/16W	[M]
R2009	ERJ3GEYJ103V	10K 1/16W	[M]
R2011	ERDS1FVJ100T	10 1/2W	[M]
R2012	ERJ3GEY0R00V	0 1/16W	[M]
R2015	ERJ3GEYJ104V	100K 1/16W	[M]
R2020	ERJ3GEY0R00V	0 1/16W	[M]
R2033	ERJ3GEY0R00V	0 1/16W	[M]
R2034	ERJ3GEY0R00V	0 1/16W	[M]
R2035	D0GB101JA002	100 1/16W	[M]
R2050	ERJ3GEYJ823V	82K 1/16W	[M]
R2057	ERJ3GEY0R00V	0 1/16W	[M]
R2058	ERJ3GEY0R00V	0 1/16W	[M]
R2061	ERJ3GEY0R00V	0 1/16W	[M]
R2062	ERJ3GEY0R00V	0 1/16W	[M]
R2080	ERJ3GEY0R00V	0 1/16W	[M]
R2081	ERJ3GEY0R00V	0 1/16W	[M]
R2082	ERJ3GEY0R00V	0 1/16W	[M]
R2101	ERJ3GEYJ823V	82K 1/16W	[M]
R2102	ERJ3GEYJ182V	1.8K 1/16W	[M]
R2103	ERJ3GEYJ183V	18K 1/16W	[M]
R2104	D0GB122JA019	1.2K 1/16W	[M]
R2105	ERJ3GEY0R00V	0 1/16W	[M]
R2106	ERJ3GEYJ822V	8.2K 1/16W	[M]
R2107	ERJ3GEYJ182V	1.8K 1/16W	[M]
R2108	ERJ3GEYJ103V	10K 1/16W	[M]
R2109	D0GB152JA002	1.5K 1/16W	[M]
R2111	ERJ3GEY0R00V	0 1/16W	[M]
R2113	ERJ3GEYJ222V	2.2K 1/16W	[M]
R2114	ERJ3GEYJ123V	12K 1/16W	[M]
R2115	ERJ3GEYJ473V	47K 1/16W	[M]
R2116	ERJ3GEYJ182V	1.8K 1/16W	[M]
R2118	ERJ3GEYJ472V	4.7K 1/16W	[M]
R2119	ERJ3GEYJ223V	22K 1/16W	[M]
R2120	ERJ3GEYJ393V	39K 1/16W	[M]
R2121	ERJ3GEYJ103V	10K 1/16W	[M]
R2122	ERJ3GEYJ102V	1K 1/16W	[M]
R2123	ERJ3GEYJ104V	100K 1/16W	[M]
R2124	ERJ3GEYJ472V	4.7K 1/16W	[M]
R2125	ERJ3GEYJ123V	12K 1/16W	[M]
R2126	ERJ3GEYJ102V	1K 1/16W	[M]
R2127	ERJ3GEYJ104V	100K 1/16W	[M]
R2128	ERJ3GEYJ102V	1K 1/16W	[M]
R2129	ERJ3GEYJ390V	39 1/16W	[M]
R2130	ERJ3GEYJ390V	39 1/16W	[M]
R2131	D0GB332JA002	3.3K 1/16W	[M]
R2201	ERJ3GEYJ823V	82K 1/16W	[M]
R2202	ERJ3GEYJ182V	1.8K 1/16W	[M]
R2203	ERJ3GEYJ183V	18K 1/16W	[M]
R2204	D0GB122JA019	1.2K 1/16W	[M]
R2205	ERJ3GEY0R00V	0 1/16W	[M]
R2206	ERJ3GEYJ822V	8.2K 1/16W	[M]
R2207	ERJ3GEYJ182V	1.8K 1/16W	[M]

Ref. No.	Part No.	Part Name & Description	Remarks
R2208	ERJ3GEYJ103V	10K 1/16W	[M]
R2209	D0GB152JA002	1.5K 1/16W	[M]
R2211	ERJ3GEY0R00V	0 1/16W	[M]
R2213	ERJ3GEYJ123V	12K 1/16W	[M]
R2214	ERJ3GEYJ473V	47K 1/16W	[M]
R2215	ERJ3GEYJ182V	1.8K 1/16W	[M]
R2217	ERJ3GEYJ472V	4.7K 1/16W	[M]
R2218	ERJ3GEYJ223V	22K 1/16W	[M]
R2219	ERJ3GEYJ393V	39K 1/16W	[M]
R2220	ERJ3GEYJ103V	10K 1/16W	[M]
R2221	ERJ3GEYJ102V	1K 1/16W	[M]
R2222	ERJ3GEYJ104V	100K 1/16W	[M]
R2223	ERJ3GEYJ472V	4.7K 1/16W	[M]
R2224	ERJ3GEYJ123V	12K 1/16W	[M]
R2225	ERJ3GEYJ102V	1K 1/16W	[M]
R2226	ERJ3GEYJ104V	100K 1/16W	[M]
R2227	ERJ3GEYJ102V	1K 1/16W	[M]
R2228	ERJ3GEYJ390V	39 1/16W	[M]
R2229	ERJ3GEYJ390V	39 1/16W	[M]
R2230	D0GB332JA002	3.3K 1/16W	[M]
R2240	ERJ3GEYJ102V	1K 1/16W	[M]
R2241	ERJ3GEYJ102V	1K 1/16W	[M]
R2242	ERJ3GEY0R00V	0 1/16W	[M]
R2245	ERJ3GEY0R00V	0 1/16W	[M]
R2246	ERJ3GEY0R00V	0 1/16W	[M]
R2247	ERJ3GEY0R00V	0 1/16W	[M]
R2801	ERJ3GEYJ102V	1K 1/16W	[M]
R2802	ERJ3GEYJ102V	1K 1/16W	[M]
R2803	ERJ3GEYJ102V	1K 1/16W	[M]
R2804	ERJ3GEYJ102V	1K 1/16W	[M]
R2805	ERJ3GEYJ102V	1K 1/16W	[M]
R2808	ERJ3GEYJ103V	10K 1/16W	[M]
R2809	ERJ3GEYJ102V	1K 1/16W	[M]
R2810	ERJ3GEYJ103V	10K 1/16W	[M]
R2811	ERJ3GEYJ102V	1K 1/16W	[M]
R2812	ERJ3GEYJ102V	1K 1/16W	[M]
R2813	ERJ3GEYJ102V	1K 1/16W	[M]
R2814	ERJ3GEYJ102V	1K 1/16W	[M]
R2815	ERJ3GEYJ102V	1K 1/16W	[M]
R2816	ERJ3GEYJ102V	1K 1/16W	[M]
R2817	ERJ3GEYJ102V	1K 1/16W	[M]
R2818	ERJ3GEYJ102V	1K 1/16W	[M]
R2819	ERJ3GEYJ102V	1K 1/16W	[M]
R2820	ERJ3GEYJ102V	1K 1/16W	[M]
R2821	ERJ3GEYJ102V	1K 1/16W	[M]
R2822	ERJ3GEYJ103V	10K 1/16W	[M]
R2823	ERJ3GEYJ103V	10K 1/16W	[M]
R2824	ERJ3GEYJ223V	22K 1/16W	[M]
R2825	ERJ3GEYJ471V	470 1/16W	[M]
R2826	ERJ3GEYJ103V	10K 1/16W	[M]
R2827	ERJ3GEYJ472V	4.7K 1/16W	[M]
R2828	ERJ3GEYJ102V	1K 1/16W	[M]
R2829	ERJ3GEYJ102V	1K 1/16W	[M]
R2830	ERJ3GEYJ102V	1K 1/16W	[M]
R2831	ERJ3GEYJ102V	1K 1/16W	[M]
R2833	ERJ3GEYJ331V	330 1/16W	[M]
R2834	ERJ3GEYJ102V	1K 1/16W	[M]
R2835	ERJ3GEYJ102V	1K 1/16W	[M]
R2836	ERJ3GEYJ102V	1K 1/16W	[M]
R2837	ERJ3GEYJ102V	1K 1/16W	[M]
R2838	ERJ3GEYJ102V	1K 1/16W	[M]
R2839	ERJ3GEYJ102V	1K 1/16W	[M]
R2840	ERJ3GEYJ102V	1K 1/16W	[M]
R2841	ERJ3GEYJ102V	1K 1/16W	[M]
R2842	ERJ3GEYJ102V	1K 1/16W	[M]
R2843	ERJ3GEYJ102V	1K 1/16W	[M]
R2847	ERJ3GEYJ102V	1K 1/16W	[M]
R2848	ERJ3GEYJ102V	1K 1/16W	[M]
R2849	D0GB101JA002	100 1/16W	[M]
R2850	ERJ3GEYJ102V	1K 1/16W	[M]
R2851	ERJ3GEYJ102V	1K 1/16W	[M]
R2852	ERJ3GEYJ102V	1K 1/16W	[M]
R2853	D0GB101JA002	100 1/16W	[M]
R2854	D0GB101JA002	100 1/16W	[M]

Ref. No.	Part No.	Part Name & Description	Remarks
R2856	ERJ3GEYJ102V	1K 1/16W	[M]
R2857	ERJ3GEYJ102V	1K 1/16W	[M]
R2858	ERJ3GEYJ102V	1K 1/16W	[M]
R2859	ERJ3GEYJ103V	10K 1/16W	[M]
R2860	ERJ3GEYJ103V	10K 1/16W	[M]
R2861	ERJ3GEYJ473V	47K 1/16W	[M]
R2862	ERJ3GEYJ102V	1K 1/16W	[M]
R2863	D0GB101JA002	100 1/16W	[M]
R2864	D0GB101JA002	100 1/16W	[M]
R2865	D0GB101JA002	100 1/16W	[M]
R2866	D0GB101JA002	100 1/16W	[M]
R2867	D0GB101JA002	100 1/16W	[M]
R2868	D0GB101JA002	100 1/16W	[M]
R2869	D0GB101JA002	100 1/16W	[M]
R2870	D0GB101JA002	100 1/16W	[M]
R2871	D0GB101JA002	100 1/16W	[M]
R2872	D0GB101JA002	100 1/16W	[M]
R2873	ERJ3GEYJ182V	1.8K 1/16W	[M]
R2874	ERJ3GEYJ103V	10K 1/16W	[M]
R2875	ERJ3GEYJ682V	6.8K 1/16W	[M]
R2876	D0GB101JA002	100 1/16W	[M]
R2877	ERJ3GEYJ102V	1K 1/16W	[M]
R2878	ERJ3GEYJ103V	10K 1/16W	[M]
R2879	ERJ3GEYJ103V	10K 1/16W	[M]
R2880	ERJ3GEYJ103V	10K 1/16W	[M]
R2881	ERJ3GEYJ103V	10K 1/16W	[M]
R2882	ERJ3GEYJ103V	10K 1/16W	[M]
R2883	ERJ3GEYJ103V	10K 1/16W	[M]
R2884	ERJ3GEYJ103V	10K 1/16W	[M]
R2885	ERJ3GEYJ103V	10K 1/16W	[M]
R2886	ERJ3GEYJ103V	10K 1/16W	[M]
R2887	ERJ3GEYJ223V	22K 1/16W	[M]
R2888	ERJ3GEYJ223V	22K 1/16W	[M]
R2889	ERJ3GEYJ223V	22K 1/16W	[M]
R2890	ERJ3GEYJ472V	4.7K 1/16W	[M]
R2895	D0GB334JA002	330K 1/16W	[M]
R2896	ERJ3GEYJ106V	10M 1/16W	[M]
R2897	ERJ3GEYJ473V	47K 1/16W	[M]
R2898	ERJ3GEYJ681V	680 1/16W	[M]
R2899	ERJ3GEYJ223V	22K 1/16W	[M]
R2900	ERJ3GEYJ123V	12K 1/16W	[M]
R2901	D0GB101JA002	100 1/16W	[M]
R2902	ERJ3GEYJ822V	8.2K 1/16W	[M]
R2903	ERJ3GEYJ222V	2.2K 1/16W	[M]
R2904	D0GB333JA002	33K 1/16W	[M]
R2905	ERJ3GEYJ104V	100K 1/16W	[M]
R2906	ERJ3GEYJ222V	2.2K 1/16W	[M]
R2907	ERJ3GEYJ222V	2.2K 1/16W	[M]
R2908	ERJ3GEYJ391V	390 1/16W	[M]
R2909	ERJ3GEYJ102V	1K 1/16W	[M]
R2910	ERJ3GEYJ750V	75 1/16W	[M]
R2911	ERJ3GEYJ750V	75 1/16W	[M]
R2912	ERJ3GEYJ222V	2.2K 1/16W	[M]
R2913	ERJ3GEYJ750V	75 1/16W	[M]
R2914	ERJ3GEYJ750V	75 1/16W	[M]
R2915	ERJ3GEYJ750V	75 1/16W	[M]
R2916	ERJ3GEYJ750V	75 1/16W	[M]
R2917	ERJ3GEYJ750V	75 1/16W	[M]
R2919	ERJ3GEYJ103V	10K 1/16W	[M]
R2920	ERJ3GEYJ563V	56K 1/16W	[M]
R2921	ERJ3GEYJ472V	4.7K 1/16W	[M]
R2922	ERJ3GEYJ103V	10K 1/16W	[M]
R2923	D0GB562JA002	5.6K 1/16W	[M]
R2924	ERJ3GEYJ824V	820K 1/16W	[M]
R2925	D0GB101JA002	100 1/16W	[M]
R2926	ERJ3GEYJ563V	56K 1/16W	[M]
R2927	ERDS1FVJ270T	27 1/2W	[M]
R2928	ERJ3GEYJ563V	56K 1/16W	[M]
R2929	ERJ3GEYJ103V	10K 1/16W	[M]
R2930	ERJ3GEYJ824V	820K 1/16W	[M]
R2931	ERJ3GEYJ102V	1K 1/16W	[M]
R2932	ERJ3GEYJ104V	100K 1/16W	[M]
R2933	ERJ3GEYJ102V	1K 1/16W	[M]
R2934	ERJ3GEYJ102V	1K 1/16W	[M]

Ref. No.	Part No.	Part Name & Description	Remarks
R2935	ERJ3GEYJ221V	220 1/16W	[M]
R2936	D0GB332JA002	3.3K 1/16W	[M]
R2937	D0GB332JA002	3.3K 1/16W	[M]
R2938	D0GB332JA002	3.3K 1/16W	[M]
R2939	D0GB332JA002	3.3K 1/16W	[M]
R2940	ERJ3GEYJ821V	820 1/16W	[M]
R2941	ERJ3GEYJ102V	1K 1/16W	[M]
R2942	D0GB152JA002	1.5K 1/16W	[M]
R2943	ERJ3GEYJ102V	1K 1/16W	[M]
R2944	ERJ3GEYJ123V	12K 1/16W	[M]
R2945	ERJ3GEYJ123V	12K 1/16W	[M]
R2946	D0GB562JA002	5.6K 1/16W	[M]
R2947	D0GB332JA002	3.3K 1/16W	[M]
R2948	ERJ3GEYJ123V	12K 1/16W	[M]
R2949	D0GB101JA002	100 1/16W	[M]
R2950	ERJ3GEYJ102V	1K 1/16W	[M]
R2951	ERJ3GEYJ102V	1K 1/16W	[M]
R2952	ERJ3GEYJ102V	1K 1/16W	[M]
R2953	D0GB272JA002	2.7K 1/16W	[M]
R2954	D0GB272JA002	2.7K 1/16W	[M]
R2955	D0GB273JA002	27K 1/16W	[M]
R2956	ERJ3GEYJ563V	56K 1/16W	[M]
R2957	ERJ3GEYJ103V	10K 1/16W	[M]
R2958	ERJ3GEYJ474V	470K 1/16W	[M]
R2959	ERJ3GEYJ102V	1K 1/16W	[M]
R2960	ERJ3GEYJ472V	4.7K 1/16W	[M]
R2961	ERJ3GEYJ474V	470K 1/16W	[M]
R2983	ERJ3GEYJ100V	10 1/16W	[M]
R2984	ERJ3GEYJ102V	1K 1/16W	[M]
R2985	ERJ3GEYJ102V	1K 1/16W	[M]
R2986	ERJ3GEYJ750V	75 1/16W	[M]
R2987	ERJ3GEYJ103V	10K 1/16W	[M]
R2988	ERDS1FVJ100T	10 1/2W	[M]
R2989	ERJ3GEYJ471V	470 1/16W	[M]
R2990	ERJ3GEYJ103V	10K 1/16W	[M]
R2991	D0GB272JA002	2.7K 1/16W	[M]
R2992	ERJ3GEYJ820V	82 1/16W	[M]
R2993	D0GB152JA002	1.5K 1/16W	[M]
R2994	D0GB151JA008	150 1/16W	[M]
R2995	ERJ3GEYJ223V	22K 1/16W	[M]
R2996	ERJ3GEYJ183V	18K 1/16W	[M]
R2997	ERJ3GEY0R00V	0 1/16W	[M]
R2998	ERJ3GEY0R00V	0 1/16W	[M]
R2999	ERJ3GEY0R00V	0 1/16W	[M]
R5101	ERDS2TJ221T	220 1/4W	[M]
R5102	ERDS2TJ682T	6.8K 1/4W	[M]
R5103	ERDS2TJ682T	6.8K 1/4W	[M]
R5104	ERDS2TJ333T	33K 1/4W	[M]
R5105	D0AE272JA048	2.7K 1/4W	[M]EG/ E
R5105	ERDS2TJ472T	4.7K 1/4W	[M]EB
R5106	ERDS2TJ152T	1.5K 1/4W	[M]
R5107	ERDS2TJ153T	15K 1/4W	[M]
R5108	ERDS2TJ682T	6.8K 1/4W	[M]
R5109	ERDS2TJ823T	82K 1/4W	[M]
R5110	ERDS2TJ104T	100K 1/4W	[M]EG/ E
R5110	ERDS2TJ184T	180K 1/4W	[M]EB
R5111	ERDS2TJ103T	10K 1/4W	[M]
R5112	ERDS1FVJ100T	10 1/2W	[M]
R5113	ERDS1FVJ100T	10 1/2W	[M]
R5151	ERDS2TJ392T	3.9K 1/4W	[M]
R5152	ERDS2TJ183T	18K 1/4W	[M]
R5153	D0AE272JA048	2.7K 1/4W	[M]EG/ E
R5153	ERDS2TJ472T	4.7K 1/4W	[M]EB
R5154	ERDS2TJ821T	820 1/4W	[M]
R5155	ERDS2TJ153T	15K 1/4W	[M]
R5156	ERDS2TJ822T	8.2K 1/4W	[M]
R5157	ERDS2TJ823T	82K 1/4W	[M]
R5158	ERDS2TJ104T	100K 1/4W	[M]EB
R5158	ERDS2TJ124T	120K 1/4W	[M]EG/ E
R5159	D0AE223JA048	22K 1/4W	[M]
R5160	ERDS1FVJ100T	10 1/2W	[M]
R5161	ERDS1FVJ100T	10 1/2W	[M]
R5162	ERDS2TJ472T	4.7K 1/4W	[M]
R5201	ERDS2TJ221T	220 1/4W	[M]

Ref. No.	Part No.	Part Name & Description	Remarks
R5202	ERDS2TJ682T	6.8K 1/4W	[M]
R5203	ERDS2TJ682T	6.8K 1/4W	[M]
R5204	ERDS2TJ333T	33K 1/4W	[M]
R5205	D0AE272JA048	2.7K 1/4W	[M]EG/ E
R5205	ERDS2TJ472T	4.7K 1/4W	[M]EB
R5206	ERDS2TJ152T	1.5K 1/4W	[M]
R5207	ERDS2TJ153T	15K 1/4W	[M]
R5208	ERDS2TJ682T	6.8K 1/4W	[M]
R5209	ERDS2TJ823T	82K 1/4W	[M]
R5210	ERDS2TJ104T	100K 1/4W	[M]EG/ E
R5210	ERDS2TJ683T	68K 1/4W	[M]EB
R5211	ERDS2TJ103T	10K 1/4W	[M]
R5212	ERDS1FVJ100T	10 1/2W	[M]
R5213	ERDS1FVJ100T	10 1/2W	[M]
R5251	ERDS2TJ392T	3.9K 1/4W	[M]
R5252	ERDS2TJ183T	18K 1/4W	[M]
R5253	D0AE272JA048	2.7K 1/4W	[M]EG/ E
R5253	ERDS2TJ472T	4.7K 1/4W	[M]EB
R5254	ERDS2TJ821T	820 1/4W	[M]
R5255	ERDS2TJ153T	15K 1/4W	[M]
R5256	ERDS2TJ822T	8.2K 1/4W	[M]
R5257	ERDS2TJ823T	82K 1/4W	[M]
R5258	ERDS2TJ124T	120K 1/4W	[M]EG/ E
R5258	ERDS2TJ394T	390K 1/4W	[M]EB
R5259	D0AE223JA048	22K 1/4W	[M]
R5260	ERDS1FVJ100T	10 1/2W	[M]
R5261	ERDS1FVJ100T	10 1/2W	[M]
R5262	ERDS2TJ472T	4.7K 1/4W	[M]
R5801	ERDS1FVJ2R2T	2.2 1/2W	[M]EB
R5801	ERDS1FVJ2R7T	2.7 1/2W	[M]EG/ E
R5802	ERDS1FVJ100T	10 1/2W	[M]EB
R5802	ERDS1FVJ2R7T	2.7 1/2W	[M]EG/ E
R5803	ERDS2TJ332T	3.3K 1/4W	[M]
R5804	ERDS2TJ151T	150 1/4W	[M]
R5805	ERDS2TJ391T	390 1/4W	[M]
R5806	D0AE272JA048	2.7K 1/4W	[M]
R5807	ERD2FCVG270T	27 1/4W	[M]EB
R5807	ERDS1FVJ270T	27 1/2W	[M]EG E
R5808	ERDS1FVJ150T	15 1/2W	[M]
R5809	ERDS2TJ332T	3.3K 1/4W	[M]
R5810	D0AE272JA048	2.7K 1/4W	[M]
R5811	ERDS2TJ2R2T	2.2 1/4W	[M]
R5812	ERDS2TJ2R2T	2.2 1/4W	[M]
R5813	ERDS2TJ2R2T	2.2 1/4W	[M]
R5814	ERDS2TJ122T	1.2K 1/4W	[M]
R5815	ERDS2TJ103T	10K 1/4W	[M]
R5818	ERDS2TJ331T	330 1/4W	[M]
R5819	ERD25FVJ270T	27 1/4W	[M]
R5820	ERD25FVJ270T	27 1/4W	[M]
R5821	ERDS2TJ392T	3.9K 1/4W	[M]
R5822	D0AE473JA048	47K 1/4W	[M]
R5823	D0AE473JA048	47K 1/4W	[M]
R5824	ERDS1FVJ331T	330 1/2W	[M]
R5825	ERDS1FVJ331T	330 1/2W	[M]
R5826	ERDS1FVJ331T	330 1/2W	[M]
R5827	ERDS2TJ104T	100K 1/4W	[M]EB
R5827	ERDS2TJ823T	82K 1/4W	[M]EG/ E
R5828	ERDS2TJ123T	12K 1/4W	[M]
R5829	D0AE223JA048	22K 1/4W	[M]
R5830	ERDS2TJ103T	10K 1/4W	[M]
R5831	ERDS2TJ332T	3.3K 1/4W	[M]
R5832	ERDS1FVJ2R7T	2.7 1/2W	[M]
R5833	ERDS1FVJ2R7T	2.7 1/2W	[M]
R5902	ERD2FCVJ4R7T	4.7 1/4W	[M]
R5903	D0AE472JA048	4.7K 1/4W	[M]
R5904	ERDS2TJ151T	150 1/4W	[M]
R5905	ERDS2TJ332T	3.3K 1/4W	[M]
R5906	ERDS2TJ103T	10K 1/4W	[M]
R5907	ERDS2TJ103T	10K 1/4W	[M]
R5908	ERDS2TJ821T	820 1/4W	[M]
R5911	ERDS2TJ151T	150 1/4W	[M]
R5912	ERDS1FVJ100T	10 1/2W	[M]
R5913	ERDS1FVJ100T	10 1/2W	[M]
R5914	ERDS1FVJ180T	18 1/2W	[M]

Ref. No.	Part No.	Part Name & Description	Remarks
R8011	ERJ3GEY0R00V	0 1/16W	[M]
R8021	ERJ2GEJ103X	10K 2W	[M]
R8022	ERJ2GEJ103X	10K 2W	[M]
R8023	ERJ2GEJ473X	47K 2W	[M]
R8041	ERJ2GEJ330X	33 2W	[M]
R8232	ERJ2GEJ103X	10K 2W	[M]
R8233	ERJ3GEYJ153V	15K 1/16W	[M]
R8235	ERJ3GEYJ822V	8.2K 1/16W	[M]
R8236	ERJ3GEYJ822V	8.2K 1/16W	[M]
R8241	ERJ3GEYJ223V	22K 1/16W	[M]
R8242	ERJ3GEYJ752V	7.5K 1/16W	[M]
R8251	ERJ6GEYJ6R8V	6.8 1/10W	[M]
R8271	ERJ14YKR39U	0.39 1/4W	[M]
R8281	ERJ3GEYJ101V	100 1/16W	[M]
R8282	ERJ3GEYJ101V	100 1/16W	[M]
R8311	D0HB242ZA002	2.4K 3W	[M]
R8312	ERJ3RBD102V	1K 3W	[M]
R8313	D0HB243ZA002	24K 3W	[M]
R8314	ERJ3GEY0R00V	0 1/16W	[M]
R8315	ERJ3GEYJ6R8V	6.8 1/16W	[M]
R8321	D0HB161ZA002	160 3W	[M]
R8322	ERJ3RED100V	10 3W	[M]
R8325	D0HB161ZA002	160 3W	[M]
R8326	ERJ3RED100V	10 3W	[M]
R8331	ERJ3RED820V	82 3W	[M]
R8332	ERJ3GEY0R00V	0 1/16W	[M]
R8335	ERJ3RED820V	82 3W	[M]
R8341	ERJ3RED820V	82 3W	[M]
R8401	ERJ2GEJ473X	47K 2W	[M]
R8402	ERJ2GEJ101X	100 2W	[M]
R8404	ERJ2GEJ101X	100 2W	[M]
R8420	ERJ3GEYJ222V	2.2K 1/16W	[M]
R8421	ERJ3GEY0R00V	0 1/16W	[M]
R8501	ERJ3GEY0R00V	0 1/16W	[M]
R8550	ERJ3GEYJ752V	7.5K 1/16W	[M]
R8551	ERJ3GEY0R00V	0 1/16W	[M]
R8552	ERJ3GEYJ331V	330 1/16W	[M]
R8553	ERJ3GEYJ102V	1K 1/16W	[M]
R8554	ERJ3GEYJ220V	22 1/16W	[M]
R8555	ERJ3GEYJ2R2V	2.2 1/16W	[M]
R8556	ERJ3GEYJ560V	56 1/16W	[M]
R8557	ERJ3GEYJ510V	51 1/16W	[M]
R8558	ERJ3GEYJ473V	47K 1/16W	[M]
R8559	ERJ3GEYJ153V	15K 1/16W	[M]
R8560	ERJ3GEYJ102V	1K 1/16W	[M]
R8561	ERJ3GEY0R00V	0 1/16W	[M]
R8562	ERJ3GEYJ331V	330 1/16W	[M]
R8563	ERJ3GEYJ102V	1K 1/16W	[M]
R8564	ERJ3GEYJ100V	10 1/16W	[M]
R8565	ERJ3GEYJ2R2V	2.2 1/16W	[M]
R8566	ERJ3GEYJ560V	56 1/16W	[M]
R8567	ERJ3GEYJ510V	51 1/16W	[M]
R8568	ERJ3GEYJ473V	47K 1/16W	[M]
R8569	ERJ3GEYJ123V	12K 1/16W	[M]
R8570	ERJ3GEYJ104V	100K 1/16W	[M]
R8601	ERJ3GEYJ102V	1K 1/16W	[M]
R8605	ERJ3GEYJ104V	100K 1/16W	[M]
R8606	ERJ3GEYJ103V	10K 1/16W	[M]
R8611	ERJ2GEJ101X	100 2W	[M]
R8621	ERJ3GEYJ105V	1M 1/16W	[M]
R8622	ERJ3RBD471V	470 3W	[M]
K8002	ERJ2GE0R00X	0 1/4W	[M]
K8004	ERJ2GE0R00X	0 1/4W	[M]
K8007	ERJ2GE0R00X	0 1/4W	[M]
K8009	ERJ2GE0R00X	0 1/4W	[M]
K8100	ERJ3GEY0R00V	0 1/16W	[M]
K8321	ERJ2GE0R00X	0 1/4W	[M]
K8325	ERJ2GE0R00X	0 1/4W	[M]
K8331	ERJ2GE0R00X	0 1/4W	[M]
K8335	ERJ2GE0R00X	0 1/4W	[M]
K8341	ERJ2GE0R00X	0 1/4W	[M]
K8421	ERJ3GEY0R00V	0 1/16W	[M]
K8651	ERJ2GE0R00X	0 1/4W	[M]

Ref. No.	Part No.	Part Name & Description	Remarks
RA8011	D1H88204A024	CHIP RESISTOR	[M]
RA8012	D1H88204A024	CHIP RESISTOR	[M]
RA8013	D1H88204A024	CHIP RESISTOR	[M]
RA8014	D1H88204A024	CHIP RESISTOR	[M]
RA8015	D1H422020001	CHIP RESISTOR	[M]
RA8016	D1H88204A024	CHIP RESISTOR	[M]
RA8017	D1H88204A024	CHIP RESISTOR	[M]
RA8018	D1H88204A024	CHIP RESISTOR	[M]
RA8021	D1H410320002	CHIP RESISTOR	[M]
RA8031	D1H447220001	CHIP RESISTOR	[M]
RA8032	D1H447220001	CHIP RESISTOR	[M]
RA8271	D1H410320002	CHIP RESISTOR	[M]
RA8401	D1H410120001	CHIP RESISTOR	[M]
RA8501	D1H456020001	CHIP RESISTOR	[M]
RA8502	D1H85604A024	CHIP RESISTOR	[M]
RA8503	D1H456020001	CHIP RESISTOR	[M]
RA8504	D1H456020001	CHIP RESISTOR	[M]
RA8611	D1H447220001	CHIP RESISTOR	[M]
		CAPACITORS	
C11	F1D1E103A001	0.01 25V	[M]
C12	F2A1C101A235	100P 16V	[M]
C21	F1D1E103A001	0.01 25V	[M]
C22	F2A1C101A235	100P 16V	[M]
C601	ECJ1VC1H101K	100P 50V	[M]
C602	ECJ1VC1H101K	100P 50V	[M]
C603	F1H1H103A219	0.01 50V	[M]
C604	F2A0J470A245	47P 6.3V	[M]
C621	F2A1H220A234	22P 50V	[M]
C622	F2A1H220A234	22P 50V	[M]
C623	F2A1H220A234	22P 50V	[M]
C624	F2A1H220A234	22P 50V	[M]
C625	ECJ1VB1H103K	0.01 50V	[M]
C626	ECJ1VC1H102J	1000P 50V	[M]
C627	ECJ1VC1H101J	100P 50V	[M]
C628	ECJ1VC1H101J	100P 50V	[M]
C629	ECJ1VB1A105K	1 10V	[M]
C630	F2A0J101A245	100P 6.3V	[M]
C631	ECJ1VC1H101K	100P 50V	[M]
C632	ECJ1VB1A105K	1 10V	[M]
C633	F2A0J101A245	100P 6.3V	[M]
C634	ECJ1VB1H102K	1000P 50V	[M]
C638	ECJ1VB1A105K	1 10V	[M]
C657	ECJ1VB1A105K	1 10V	[M]
C1101	ECA1HAK010XB	1 50V	[M]
C1102	ECJ1VB1H102K	1000P 50V	[M]
C1103	ECA1CAK101XB	100 16V	[M]
C1104	ECJ1VB1C273K	0.027 16V	[M]
C1105	ECJ1VB1H471K	470P 50V	[M]
C1106	ECA1HAK2R2XB	2.2 50V	[M]
C1107	F1H1H152A219	1500P 50V	[M]
C1108	ECA1CAK100XB	10 16V	[M]
C1109	ECA1HAK3R3XB	3.3 50V	[M]
C1110	F1H1H682A219	6800P 50V	[M]
C1121	ECJ1VB1H102K	1000P 50V	[M]
C1122	F1H1H103A219	0.01 50V	[M]
C1123	ECJ1VB1H271K	270P 50V	[M]
C1201	ECA1HAK010XB	1 50V	[M]
C1202	ECJ1VB1H102K	1000P 50V	[M]
C1203	ECA1CAK101XB	100 16V	[M]
C1204	ECJ1VB1C273K	0.027 16V	[M]
C1205	ECJ1VB1H471K	470P 50V	[M]
C1206	ECA1HAK2R2XB	2.2 50V	[M]
C1207	F1H1H152A219	1500P 50V	[M]
C1208	ECA1CAK100XB	10 16V	[M]
C1209	ECA1HAK3R3XB	3.3 50V	[M]
C1210	F1H1H682A219	6800P 50V	[M]
C1221	ECJ1VB1H102K	1000P 50V	[M]
C1222	F1H1H103A219	0.01 50V	[M]
C1223	ECJ1VB1H271K	270P 50V	[M]
C1301	ECA1HAK0R1XB	0.1 50V	[M]
C1302	ECJ1VB1C333K	0.033 16V	[M]

Ref. No.	Part No.	Part Name & Description	Remarks
C1303	ECJ1VB1C333K	0.033 16V	[M]
C1304	ECA1HAK4R7XB	4.7 50V	[M]
C1305	ECA1CAK330XB	33 16V	[M]
C1307	ECA1AAK221XQ	220 10V	[M]
C1308	ECA1CAK220XB	22 16V	[M]
C1310	ECA1HAK0R1XB	0.1 50V	[M]
C1311	ECA1CAK470XB	47 16V	[M]
C1312	ECJ1VB1H332K	3300P 50V	[M]
C1314	ECJ1VB1H222K	2200P 50V	[M]
C1315	ECJ1VB1H222K	2200P 50V	[M]
C1316	ECJ1VB1H102K	1000P 50V	[M]
C1317	ECJ1VB1H102K	1000P 50V	[M]
C1318	ECQV1H473JZ3	0.047 50V	[M]
C1319	ECA1CAK101XB	100 16V	[M]
C1320	ECA1HAK010XB	1 50V	[M]
C1321	F0A2A472A019	4700P 100V	[M]
C1323	ECEA1HKN010B	1 50V	[M]
C1324	ECA1CAK470XB	47 16V	[M]
C1326	ECA1CAK100XB	10 16V	[M]
C1371	F1H1H103A219	0.01 50V	[M]
C2004	ECJ1VF1A105Z	1 10V	[M]
C2005	ECJ1VF1A105Z	1 10V	[M]
C2101	ECJ1VB1E473K	0.047 25V	[M]
C2102	ECJ1VB1H331K	330P 50V	[M]
C2103	ECA1CAK100XB	10 16V	[M]
C2104	ECJ1VB1H102K	1000P 50V	[M]
C2105	ECA1CAK100XB	10 16V	[M]
C2106	ECJ1VC1H221J	220P 50V	[M]
C2107	ECA1CAK100XB	10 16V	[M]
C2108	ECJ1VB1H102K	1000P 50V	[M]
C2109	ECA1CAK100XB	10 16V	[M]
C2110	ECJ1VC1H101J	100P 50V	[M]
C2111	ECA1CAK100XB	10 16V	[M]
C2112	ECJ1VC1H101J	100P 50V	[M]
C2113	ECA1CAK100XB	10 16V	[M]
C2114	ECJ1VB1H472K	4700P 50V	[M]
C2115	ECJ1VB1C153K	0.015 16V	[M]
C2116	ECJ1VB1C153K	0.015 16V	[M]
C2117	ECJ1VB1A154K	0.15 10V	[M]
C2118	ECJ1VB1A154K	0.15 10V	[M]
C2119	ECA1CAK100XB	10 16V	[M]
C2120	ECEA1HKAR47B	0.47 50V	[M]
C2122	ECJ1VB1H102K	1000P 50V	[M]
C2126	ECJ1VC1H470J	47P 50V	[M]
C2127	ECJ1VB1C273K	0.027 16V	[M]
C2128	ECA1CAK100XB	10 16V	[M]
C2129	ECJ1VB1H102K	1000P 50V	[M]
C2130	ECEA1CKA100B	10 16V	[M]
C2131	ECA1HAK3R3XB	3.3 50V	[M]
C2132	ECJ1VB1H332K	3300P 50V	[M]
C2201	ECJ1VB1E473K	0.047 25V	[M]
C2202	ECJ1VB1H331K	330P 50V	[M]
C2203	ECA1CAK100XB	10 16V	[M]
C2204	ECJ1VB1H102K	1000P 50V	[M]
C2205	ECA1CAK100XB	10 16V	[M]
C2206	ECJ1VC1H221J	220P 50V	[M]
C2207	ECA1CAK100XB	10 16V	[M]
C2208	ECJ1VB1H102K	1000P 50V	[M]
C2209	ECA1CAK100XB	10 16V	[M]
C2210	ECJ1VC1H101J	100P 50V	[M]
C2211	ECA1CAK100XB	10 16V	[M]
C2212	ECJ1VC1H101J	100P 50V	[M]
C2213	ECA1CAK100XB	10 16V	[M]
C2214	ECJ1VF1A105Z	1 10V	[M]
C2215	ECJ1VB1H472K	4700P 50V	[M]
C2216	ECJ1VB1C153K	0.015 16V	[M]
C2217	ECJ1VB1C153K	0.015 16V	[M]
C2218	ECJ1VB1A154K	0.15 10V	[M]
C2219	ECJ1VB1A154K	0.15 10V	[M]
C2220	ECA1CAK100XB	10 16V	[M]
C2221	ECEA1HKAR47B	0.47 50V	[M]
C2223	ECJ1VB1H102K	1000P 50V	[M]
C2227	ECJ1VC1H470J	47P 50V	[M]
C2228	ECJ1VB1C273K	0.027 16V	[M]

Ref. No.	Part No.	Part Name & Description	Remarks
C2229	ECA1CAK100XB	10 16V	[M]
C2230	ECJ1VB1H102K	1000P 50V	[M]
C2231	ECEA1CKA100B	10 16V	[M]
C2232	ECA1HAK3R3XB	3.3 50V	[M]
C2233	ECJ1VB1H332K	3300P 50V	[M]
C2235	ECJ1VB1H103K	0.01 50V	[M]
C2237	ECEA1HKA010B	1 50V	[M]
C2801	ECJ1VC1H101J	100P 50V	[M]
C2802	ECJ1VC1H101J	100P 50V	[M]
C2803	ECJ1VC1H101J	100P 50V	[M]
C2804	ECJ1VC1H101J	100P 50V	[M]
C2805	ECJ1VC1H101J	100P 50V	[M]
C2806	ECJ1VC1H101J	100P 50V	[M]
C2810	ECJ1VC1H101J	100P 50V	[M]
C2811	ECJ1VC1H101J	100P 50V	[M]
C2812	ECJ1VC1H101J	100P 50V	[M]
C2813	ECJ1VB1H471K	470P 50V	[M]
C2814	ECJ1VB1H471K	470P 50V	[M]
C2815	ECJ1VB1H471K	470P 50V	[M]
C2816	ECJ1VC1H101J	100P 50V	[M]
C2817	ECJ1VC1H101J	100P 50V	[M]
C2818	ECJ1VC1H101J	100P 50V	[M]
C2819	ECJ1VC1H101J	100P 50V	[M]
C2820	ECJ1VB1H471K	470P 50V	[M]
C2821	ECJ1VB1H103K	0.01 50V	[M]
C2822	ECJ1VB1H471K	470P 50V	[M]
C2823	ECJ1VB1H103K	0.01 50V	[M]
C2824	ECA1AAK220XB	22 10V	[M]
C2825	ECJ1VC1H101J	100P 50V	[M]
C2826	ECJ1VC1H101J	100P 50V	[M]
C2827	ECJ1VC1H101J	100P 50V	[M]
C2828	ECJ1VC1H101J	100P 50V	[M]
C2829	ECJ1VC1H101J	100P 50V	[M]
C2830	ECJ1VC1H101J	100P 50V	[M]
C2831	ECJ2VB1E223K	0.022 25V	[M]
C2832	ECJ1VC1H221J	220P 50V	[M]
C2839	ECJ1VC1H220J	22P 50V	[M]
C2840	F1H1H180A736	18P 50V	[M]
C2841	ECA0JAK101XB	100 6.3V	[M]
C2842	F1H1C104A067	0.1 16V	[M]
C2843	RCE1AM102B	1000P 10V	[M]
C2844	ECJ1VC1H101J	100P 50V	[M]
C2845	ECA1HAK010XB	1 50V	[M]
C2846	ECA1HAK2R2XB	2.2 50V	[M]
C2847	F1H1H103A219	0.01 50V	[M]
C2848	ECA1AAK220XB	22 10V	[M]
C2849	EEUFC0J821B	820P 6.3V	[M]
C2850	F1J1H104A459	0.1 50V	[M]
C2851	ECA1EAM331XB	330 25V	[M]
C2852	EEUFC0J821B	820P 6.3V	[M]
C2853	F1J1H104A459	0.1 50V	[M]
C2854	ECJ1VF1A105Z	10 10V	[M]
C2855	ECA1EAM331XB	330 25V	[M]
C2856	ECA1CAK470XB	47 16V	[M]
C2857	ECA0JM471B	470 6.3V	[M]
C2858	F1J1H104A459	0.1 50V	[M]
C2859	ECA1CAK100XB	10 16V	[M]
C2860	ECA1AAK221XB	220 10V	[M]
C2861	F1J1H104A459	0.1 50V	[M]
C2862	ECA1CAK470XB	47 16V	[M]
C2863	ECA1CM471B	470 16V	[M]
C2864	F1J1H104A459	0.1 50V	[M]
C2865	ECJ1VB1H102K	1000P 50V	[M]
C2866	ECJ1VB1H102K	1000P 50V	[M]
C2867	ECJ1VC1H101J	100P 50V	[M]
C2868	ECJ1VC1H101J	100P 50V	[M]
C2869	ECJ1VC1H101J	100P 50V	[M]
C2871	ECJ1VB1H103K	0.01 50V	[M]
C2872	F1J1H104A459	0.1 50V	[M]
C2873	ECEA0JKA220B	22 6.3V	[M]
C2874	ECJ1VF1A105Z	1 10V	[M]
C2875	ECJ1VF1A105Z	1 10V	[M]
C2876	ECJ1VF1A105Z	1 10V	[M]
C2878	ECJ1VB1H103K	0.01 50V	[M]

Ref. No.	Part No.	Part Name & Description	Remarks
C2879	ECEA0JKA220B	22 6.3V	[M]
C2880	F1J1H104A459	0.1 50V	[M]
C2881	ECA0JAM102XB	1000 6.3V	[M]
C2882	ECA0JAM102XB	1000 6.3V	[M]
C2883	ECA0JAM102XB	1000 6.3V	[M]
C2884	ECA0JAM102XB	1000 6.3V	[M]
C2885	ECA0JAM102XB	1000 6.3V	[M]
C2886	F1J1H104A459	0.1 50V	[M]
C2887	F1J1H104A459	0.1 50V	[M]
C2888	ECA1CAK330XB	33 16V	[M]
C2889	F1J1H104A459	0.1 50V	[M]
C2890	ECJ1VC1H101J	100P 50V	[M]
C2891	ECA1CAK470XB	47 16V	[M]
C2892	ECA0JAK101XB	100 6.3V	[M]
C2893	ECA1AAK221XB	220 10V	[M]
C2894	ECA1HAK2R2XB	2.2 50V	[M]
C2895	ECJ1VB1H102K	1000P 50V	[M]
C2896	ECJ1VC1H101J	100P 50V	[M]
C2897	ECA1HAK4R7XB	4.7 50V	[M]
C2899	ECA1HAK100XB	10 50V	[M]
C2900	ECJ1VB1H331K	330P 50V	[M]
C2901	ECA1HAK100XB	10 50V	[M]
C2902	ECJ1VB1H561K	560P 50V	[M]
C2903	ECJ1VC1H470J	47P 50V	[M]
C2904	ECJ1VC1H470J	47P 50V	[M]
C2905	ECA0JAK470XB	47 6.3V	[M]
C2906	ECJ1VC1H102J	1000P 50V	[M]
C2907	ECJ1VB1H103K	0.01 50V	[M]
C2909	ECJ1VC1H101J	100P 50V	[M]
C2910	ECJ1VC1H220J	22P 50V	[M]
C2911	ECJ1VB1H271K	270P 50V	[M]
C2912	ECJ1VB1H331K	330P 50V	[M]
C2913	ECJ1VC1H220J	22P 50V	[M]
C2914	ECJ1VB1H271K	270P 50V	[M]
C2915	ECJ1VB1H331K	330P 50V	[M]
C2916	ECJ1VC1H220J	22P 50V	[M]
C2917	ECJ1VB1H271K	270P 50V	[M]
C2918	ECJ1VB1H331K	330P 50V	[M]
C2919	ECJ1VB1E473K	0.047 25V	[M]
C2920	ECJ1VB1E473K	0.047 25V	[M]
C2922	F1D1H473A012	0.047 50V	[M]
C2923	ECA1HAK4R7XB	4.7 50V	[M]
C2924	F1J1H104A459	0.1 50V	[M]
C2925	F1J1H104A459	0.1 50V	[M]
C2926	F2A1E471A205	470P 25V	[M]
C2927	ECJ1VC1H470J	47P 50V	[M]
C2928	ECJ1VC1H470J	47P 50V	[M]
C2929	F2A1E471A205	470P 25V	[M]
C2930	F1J1H104A459	0.1 50V	[M]
C2932	ECJ1VB1C823K	0.082 16V	[M]
C2933	ECJ1VB1C823K	0.082 16V	[M]
C2934	ECA1CAK100XB	10 16V	[M]
C2935	ECJ1VB1H103K	0.01 50V	[M]
C2936	ECJ1VB1H103K	0.01 50V	[M]
C2937	ECEA1HKN4R7B	4.7 50V	[M]
C2981	F1J1H104A459	0.1 50V	[M]
C2982	ECJ1VC1H101J	100P 50V	[M]
C2983	ECJ1VC1H101J	100P 50V	[M]
C2984	ECJ1VC1H101J	100P 50V	[M]
C2985	F1J1H104A459	0.1 50V	[M]
C2992	ECA0JM471B	470 6.3V	[M]
C2993	ECA0JM471B	470 6.3V	[M]
C2994	ECJ1VC1H220J	22P 50V	[M]
C2995	ECA0JAM102XB	1000 6.3V	[M]
C2996	ECA0JAM102XB	1000 6.3V	[M]
C2997	ECJ2VF1H104Z	0.1 50V	[M]
C2998	ECJ2FB1H104K	0.1 50V	[M]
C5101	F1D1H102A012	1000P 50V	[M]
C5102	ECBT1H333KB5	0.033 50V	[M]EB
C5102	F1D1H333A012	0.033 50V	[M]EG/ E
C5103	ECQB1H562JF3	5600P 50V	[M]
C5104	ECEA1HKA2R2B	2.2 50V	[M]
C5105	F1D1H821A012	820P 50V	[M]
C5106	F1D1H150A015	15P 50V	[M]

Ref. No.	Part No.	Part Name & Description	Remarks
C5107	F1D1H473A012	0.047 50V	[M]
C5108	F1D1H473A012	0.047 50V	[M]
C5151	F1D1H682A046	6800P 50V	[M]
C5152	F1D1H682A046	6800P 50V	[M]
C5153	ECA1HAK010XB	1 50V	[M]
C5154	F1D1H821A012	820P 50V	[M]
C5155	F1D1H150A015	15P 50V	[M]
C5156	F1D1H473A012	0.047 50V	[M]
C5157	F1D1H473A012	0.047 50V	[M]
C5158	F1D1H1040002	0.1 50V	[M]
C5201	F1D1H102A012	1000P 50V	[M]
C5202	F1D1H333A012	0.033 50V	[M]
C5203	ECQB1H562JF3	5600P 50V	[M]
C5204	ECEA1HKA2R2B	2.2 50V	[M]
C5205	F1D1H821A012	820P 50V	[M]
C5206	F1D1H150A015	15P 50V	[M]
C5207	F1D1H473A012	0.047 50V	[M]
C5208	F1D1H473A012	0.047 50V	[M]
C5251	F1D1H682A046	6800P 50V	[M]
C5252	F1D1H682A046	6800P 50V	[M]
C5253	ECA1HAK010XB	1 50V	[M]
C5254	F1D1H821A012	820P 50V	[M]
C5255	F1D1H150A015	15P 50V	[M]
C5256	F1D1H473A012	0.047 50V	[M]
C5257	F1D1H473A012	0.047 50V	[M]
C5258	F1D1H1040002	0.1 50V	[M]
C5801	ECQE1104KF3	0.1 100V	[M]
C5802	ECA1HM332E	3300 50V	[M]
C5803	ECA1HM332E	3300 50V	[M]
C5804	ECA1EAM332XE	3300 25V	[M]
C5805	F1B1H103A007	0.01 50V	[M]
C5806	ECA1CAK101XB	100 16V	[M]
C5807	ECA1CAK100XB	10 16V	[M]
C5808	ECKR2H103ZF5	0.01 500V	[M]
C5809	ECA1HAK100XB	10 50V	[M]
C5810	ECA1CAK100XB	10 16V	[M]
C5811	ECA1CAK101XB	100 16V	[M]
C5812	ECKR2H103ZF5	0.01 500V	[M]
C5813	ECA1CAK100XB	10 16V	[M]
C5814	F1B1H103A007	0.01 50V	[M]
C5815	F1B1H103A007	0.01 50V	[M]
C5816	ECA1CAK470XB	47 16V	[M]
C5817	F1E1H1030001	0.01 50V	[M]
C5819	ECKR2H103ZF5	0.01 500V	[M]
C5820	F1D1H102A012	1000P 50V	[M]
C5821	ECA0JM471B	470 6.3V	[M]EG/ E
C5821	ECA1AAK221XB	220 10V	[M]EB
C5901	ECA1HM101B	100 50V	[M]
C5903	F1B1H103A007	0.01 50V	[M]
C5904	ECA2AM100B	10 100V	[M]
C5905	ECA1HAM470XB	47 50V	[M]
C5906	ECQE1104KF3	0.1 100V	[M]
C5907	ECA1HAK4R7XB	4.7 50V	[M]
C5908	F1B1H103A007	0.01 50V	[M]
C5909	F1B1H103A007	0.01 50V	[M]
C5912	F2A1C1020029	1000P 16V	[M]
C5914	F1B1H103A007	0.01 50V	[M]
C5915	ECA1HAM470XB	47 50V	[M]
C5916	ECA1HAM470XB	47 50V	[M]
C5917	F1B1H103A007	0.01 50V	[M]
C8001	EEEFC0J101P	100P 6.3V	[M]
C8002	EEE0GA331WP	330P 4V	[M]
C8003	ECJ1VB1H222K	2200P 50V	[M]
C8004	ECJ0EF1C104Z	0.1 16V	[M]
C8005	ECJ1ZF1C104Z	0.1 16V	[M]
C8006	ECJ1ZF1C104Z	0.1 16V	[M]
C8007	ECJ0EF1C104Z	0.1 16V	[M]
C8008	ECJ1ZF1C104Z	0.1 16V	[M]
C8009	ECJ1ZF1C104Z	0.1 16V	[M]
C8010	ECJ0EF1C104Z	0.1 16V	[M]
C8011	F1H0J1050013	1 6.3V	[M]
C8012	ECJ1ZF1C104Z	0.1 16V	[M]
C8013	ECJ1ZF1C104Z	0.1 16V	[M]
C8014	ECJ1ZF1C104Z	0.1 16V	[M]

Ref. No.	Part No.	Part Name & Description	Remarks
C8015	F1H0J1050013	1 6.3V	[M]
C8016	F1H0J1050013	1 6.3V	[M]
C8017	ECJ0EF1C104Z	0.1 16V	[M]
C8018	ECJ0EF1C104Z	0.1 16V	[M]
C8019	F1H0J1050013	1 6.3V	[M]
C8020	ECJ0EF1C104Z	0.1 16V	[M]
C8021	ECJ0EF1C104Z	0.1 16V	[M]
C8022	ECJ1ZF1C104Z	0.1 16V	[M]
C8023	F1H0J1050013	1 6.3V	[M]
C8024	ECJ1VB1H222K	2200P 50V	[M]
C8025	ECJ1ZF1C104Z	0.1 16V	[M]
C8026	F1H0J1050013	1 6.3V	[M]
C8027	ECJ0EF1C104Z	0.1 16V	[M]
C8028	F1H0J1050013	1 6.3V	[M]
C8031	ECJ1ZF1C104Z	0.1 16V	[M]
C8051	F1H0J1050013	1 6.3V	[M]
C8052	ECJ0EF1C104Z	0.1 16V	[M]
C8053	ECJ1VC1H221J	220P 50V	[M]
C8054	F1H0J1050013	1 6.3V	[M]
C8055	F1H0J1050013	1 6.3V	[M]
C8056	ECJ0EF1C104Z	0.1 16V	[M]
C8057	ECJ1VB1H222K	2200P 50V	[M]
C8111	F1H1C104A042	0.1 16V	[M]
C8112	ECJ2FB1A105K	1 10V	[M]
C8113	ECJ1VC1H471J	470P 50V	[M]
C8201	EEE0JA101WR	100P 6.3V	[M]
C8202	EEEFC0J101P	100P 6.3V	[M]
C8203	ECJ1ZF1C104Z	0.1 16V	[M]
C8204	ECJ1ZF1C104Z	0.1 16V	[M]
C8205	ECJ1ZF1C104Z	0.1 16V	[M]
C8206	F1H0J1050013	1 6.3V	[M]
C8207	ECJ1ZF1C104Z	0.1 16V	[M]
C8208	ECJ1ZF1C104Z	0.1 16V	[M]
C8211	ECJ1VB1C333K	0.033 16V	[M]
C8212	ECJ1ZF1C104Z	0.1 16V	[M]
C8213	ECJ1ZF1C104Z	0.1 16V	[M]
C8214	ECJ1ZF1C104Z	0.1 16V	[M]
C8215	ECJ1VB1H562K	5600P 50V	[M]
C8216	ECJ1VB1C183K	0.018 16V	[M]
C8217	F1H0J1050013	1 6.3V	[M]
C8218	F1H0J1050013	1 6.3V	[M]
C8221	F1H1C104A042	0.1 16V	[M]
C8222	F1H1C104A042	0.1 16V	[M]
C8223	F1H1C104A042	0.1 16V	[M]
C8224	F1H1C104A042	0.1 16V	[M]
C8225	ECJ1ZF1C104Z	0.1 16V	[M]
C8226	ECJ1ZF1C104Z	0.1 16V	[M]
C8227	ECJ1ZF1C104Z	0.1 16V	[M]
C8228	ECJ2FB1A105K	1 10V	[M]
C8229	ECJ2FB1A105K	1 10V	[M]
C8232	ECJ1ZF1C104Z	0.1 16V	[M]
C8233	ECJ1VB1H472K	4700P 50V	[M]
C8234	ECJ1ZF1C104Z	0.1 16V	[M]
C8235	ECJ1VC1H102J	1000P 50V	[M]
C8236	ECJ1VC1H102J	1000P 50V	[M]
C8237	ECJ1VC1H102J	1000P 50V	[M]
C8238	ECJ1VC1H821J	820P 50V	[M]

Ref. No.	Part No.	Part Name & Description	Remarks
C8241	F1H1C104A042	0.1 16V	[M]
C8242	F1H1C104A042	0.1 16V	[M]
C8251	EEEFC0J221P	220P 6.3V	[M]
C8252	EEE1CA220WR	22P 16V	[M]
C8253	ECJ1ZF1C104Z	0.1 16V	[M]
C8254	ECJ1ZF1C104Z	0.1 16V	[M]
C8255	ECJ1ZF1C104Z	0.1 16V	[M]
C8261	ECJ1ZF1C104Z	0.1 16V	[M]
C8271	EEEFC1C470P	47P 16V	[M]
C8272	EEE0JA330WR	33P 6.3V	[M]
C8273	ECJ1ZF1C104Z	0.1 16V	[M]
C8274	ECJ1ZF1C104Z	0.1 16V	[M]
C8275	ECJ1ZF1C104Z	0.1 16V	[M]
C8284	ECJ1VB1H103K	0.01 50V	[M]
C8285	ECJ1VB1H103K	0.01 50V	[M]
C8286	ECJ1VB1H103K	0.01 50V	[M]
C8287	F1H1C104A042	0.1 16V	[M]
C8288	ECJ1ZF1C104Z	0.1 16V	[M]
C8301	EEE0JA221WP	220P 6.3V	[M]
C8302	EEE0JA330WR	33P 6.3V	[M]
C8303	ECJ1ZF1C104Z	0.1 16V	[M]
C8304	F1H0J1050013	1 6.3V	[M]
C8307	ECJ1ZF1C104Z	0.1 16V	[M]
C8311	ECJ1ZF1C104Z	0.1 16V	[M]
C8312	F1H0J1050013	1 6.3V	[M]
C8400	ECJ1VC1H150J	15P 50V	[M]
C8420	F2G0J331A015	330P 6.3V	[M]
C8421	F3F1A106A001	10 10V	[M]
C8423	ECJ1ZF1C104Z	0.1 16V	[M]
C8424	ECJ1ZF1C104Z	0.1 16V	[M]
C8425	F3F1A106A001	10 10V	[M]
C8456	ECJ1ZF1C104Z	0.1 16V	[M]
C8501	F1K1A1060017	10 10V	[M]
C8502	ECJ1ZF1C104Z	0.1 16V	[M]
C8503	ECJ1ZF1C104Z	0.1 16V	[M]
C8504	ECJ1ZF1C104Z	0.1 16V	[M]
C8505	ECJ1VC1H221J	220P 50V	[M]
C8506	ECJ1VC1H101J	100P 50V	[M]
C8550	EEE0JA330WR	33P 6.3V	[M]
C8551	ECJ1ZF1C104Z	0.1 16V	[M]
C8552	EEEFC1C100R	10P 16V	[M]
C8553	EEE0JA470WR	47P 6.3V	[M]
C8554	F1H0J1050013	1 6.3V	[M]
C8561	ECJ1ZF1C104Z	0.1 16V	[M]
C8562	EEEFC1C100R	10P 16V	[M]
C8563	EEE0JA470WR	47P 6.3V	[M]
C8564	F1H0J1050013	1 6.3V	[M]
C8601	ECJ0EF1C104Z	0.1 16V	[M]
C8605	ECJ0EF1C104Z	0.1 16V	[M]
C8606	ECJ1VB1A224K	0.22 10V	[M]
C8611	ECJ1ZF1C104Z	0.1 16V	[M]
C8621	ECJ1VC1H390J	39P 50V	[M]
C8622	ECJ1VC1H050D	5P 50V	[M]
C8651	ECJ1ZF1C104Z	0.1 16V	[M]
C8652	ECJ1ZF1C104Z	0.1 16V	[M]
C8691	ECJ0EF1C104Z	0.1 16V	[M]
C8695	ECJ0EF1C104Z	0.1 16V	[M]

23.5. Packing Materials & Accessories Parts List

Ref. No.	Part No.	Part Name & Description	Remarks
		PACKING MATERIALS	
P1	RPGX1267	PACKING CASE	[M]EG
P1	RPGX1268	PACKING CASE	[M]EB
P1	RPGX1269	PACKING CASE	[M]E
P2	RPNX0224	POLYFOAM	[M]
P3	RPHV0001	MIRAMAT SHEET	[M]
		ACCESSORIES	
A1	N2QAJB000099	REMOTE CONTROL	[M]
A1-1	RKK-HTR0051K	R/C BATTERY COVER	[M]

Ref. No.	Part No.	Part Name & Description	Remarks
A2	K2CQ2CA00002	AC CORD	[M]EG/E ⚠
A2	VJA0733	AC CORD	[M]EB ⚠
A3	RQT7502-B	O/I BOOK (En)	[M]E/EB
A3	RQT7503-R	O/I BOOK (Sp/Po/Cz)	[M]E
A3	RQT7504-D	O/I BOOK (Ge/It/Fr)	[M]EG
A3	RQT7505-H	O/I BOOK (Sw/Da/Du)	[M]EG
A4	N1DAAAA00001	AM LOOP ANTENNA	[M]
A4	RSA0007-L	FM ANTENNA WIRE	[M]
A5	RJL1P016B15A	VIDEO CABLE	[M]
A6	K1YZ02000013	ANT ADAPTOR	[M]EB
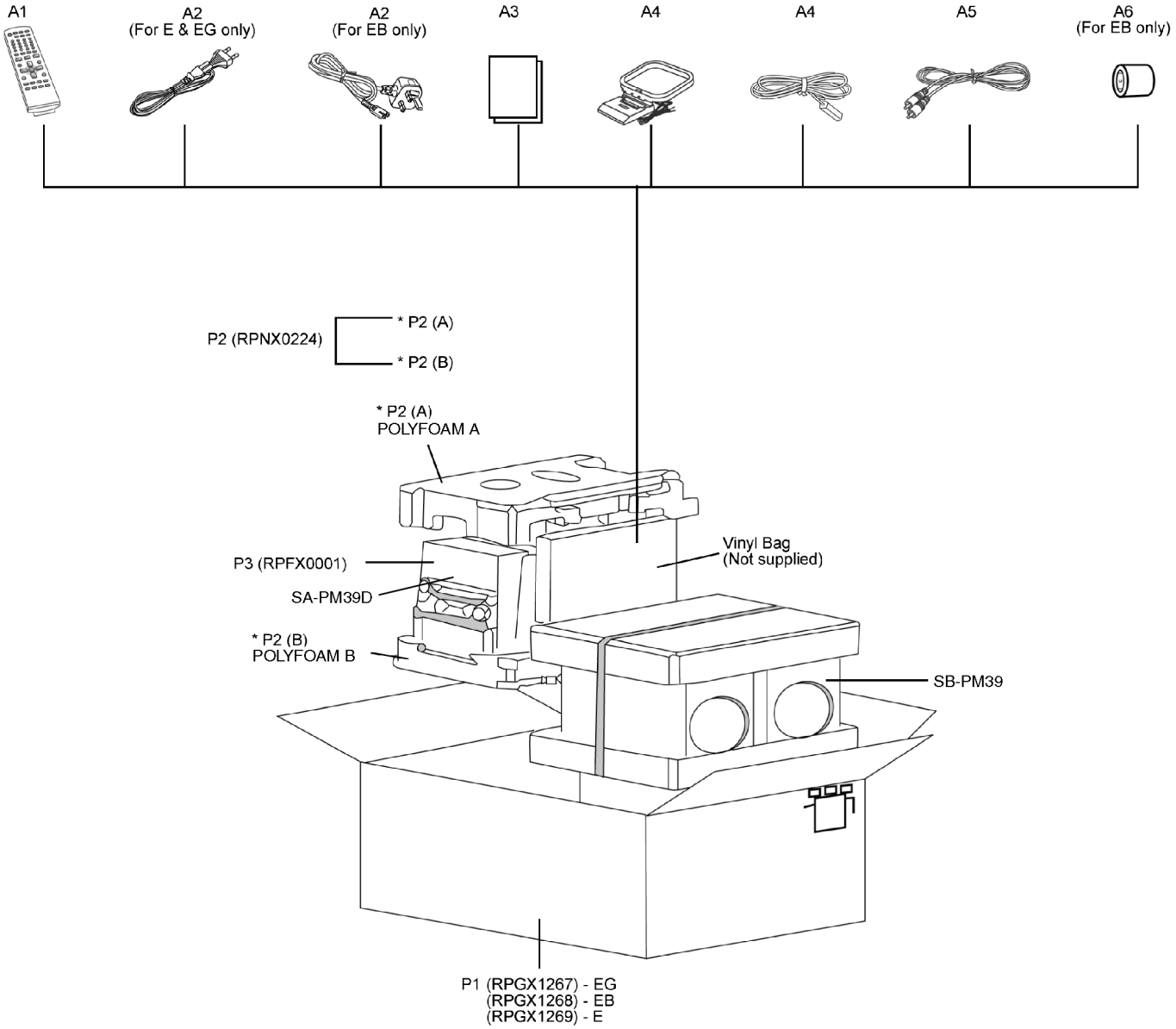
23.6. Packaging