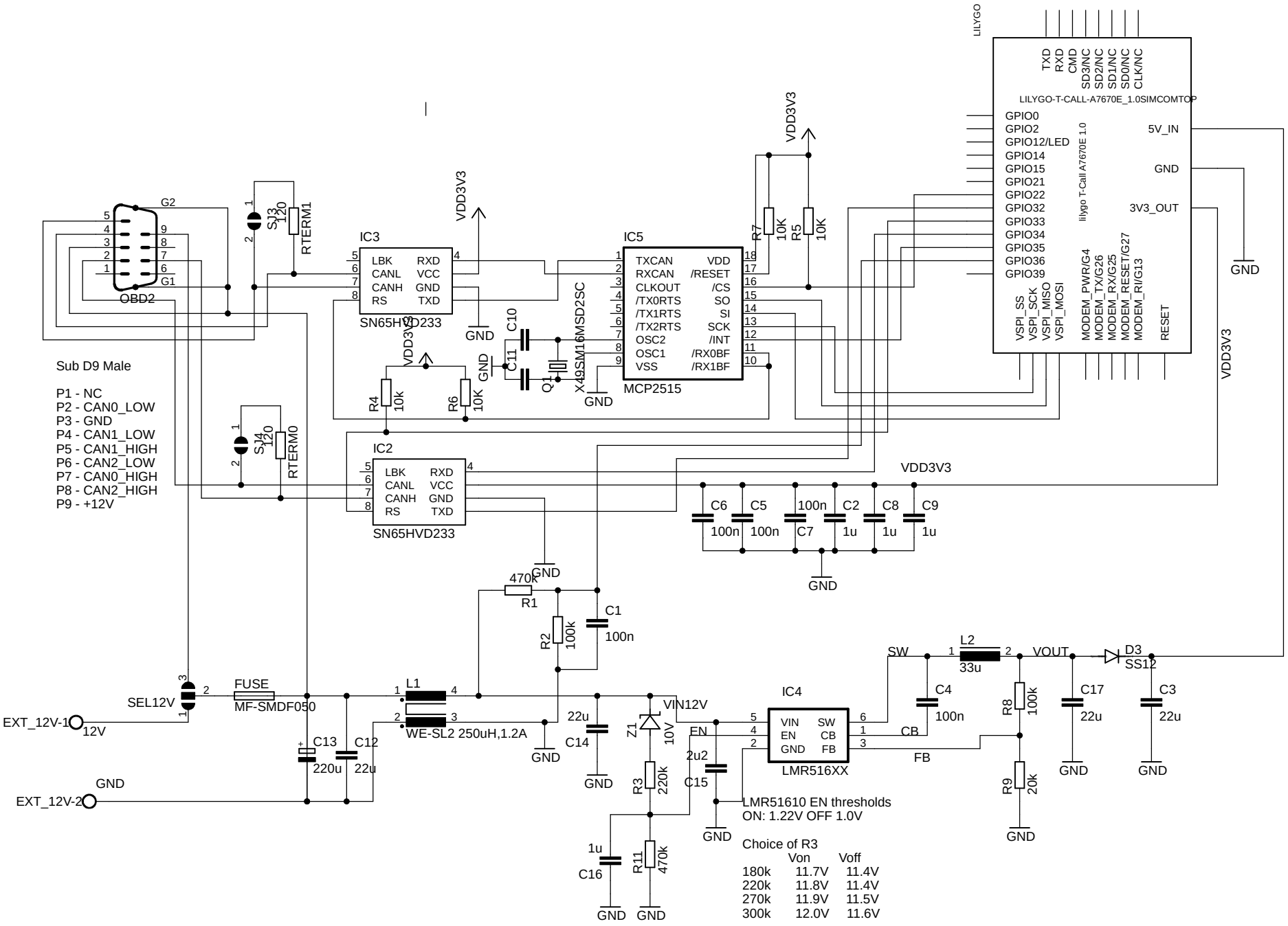
OBD2
G2
G1
Sub D9 Male
P1 - NC
P2 - CAN0_LOW
P3 - GND
P4 - CAN1_LOW
P5 - CAN1_HIGH
P6 - CAN2_LOW
P7 - CAN0_HIGH
P8 - CAN2_HIGH
P9 - +12V
SJ3
SJ4
120
RTERM1
RTERM0
IC3
IC2
LBK
CANL
CANH
RS
RXD
VCC
GND
TXD
SN65HVD233
VDD3V3
GND
C10
C11
Q1
X49SM16MSD2SC
IC5
TXCAN
RXCAN
CLKOUT
/TX0RTS
/TX1RTS
/TX2RTS
OSC2
OSC1
VSS
VDD
/RESET
/CS
SO
SI
SCK
/INT
/RX0BF
/RX1BF
MCP2515
R4
10k
R6
10K
R7
10K
R5
10K
LILYGO
LILYGO-T-CALL-A7670E_1.0SIMCOMTOP
lilygo T-Call A7670E 1.0
TXD
RXD
CMD
SD3/NC
SD2/NC
SD1/NC
SD0/NC
CLK/NC
GPIO0
GPIO2
GPIO12/LED
GPIO14
GPIO15
GPIO21
GPIO22
GPIO32
GPIO33
GPIO34
GPIO35
GPIO36
GPIO39
5V_IN
GND
3V3_OUT
VSPI_SS
VSPI_SCK
VSPI_MISO
VSPI_MOSI
MODEM_PWR/G4
MODEM_TX/G26
MODEM_RX/G25
MODEM_RESET/G27
MODEM_RI/G13
RESET
C6
C5
100n
C2
C8
C9
C7
1u
470k
R1
R2
100k
C1
100n
SEL12V
FUSE
MF-SMDF050
EXT_12V-1
12V
EXT_12V-2
C13
220u
C12
22u
L1
WE-SL2 250uH,1.2A
22u
C14
Z1
10V
VIN12V
EN
2u2
C15
R3
220k
1u
C16
R11
470k
IC4
VIN
EN
GND
SW
CB
FB
LMR516XX
SW
L2
33u
VOUT
D3
SS12
C4
100n
R8
100k
R9
20k
C17
22u
C3
22u
LMR51610 EN thresholds
ON: 1.22V OFF 1.0V
Choice of R3
Von Voff
180k 11.7V 11.4V
220k 11.8V 11.4V
270k 11.9V 11.5V
300k 12.0V 11.6V
Values depend on the actual
Zener voltage (nominal 10V) at
low current (2.8µA).