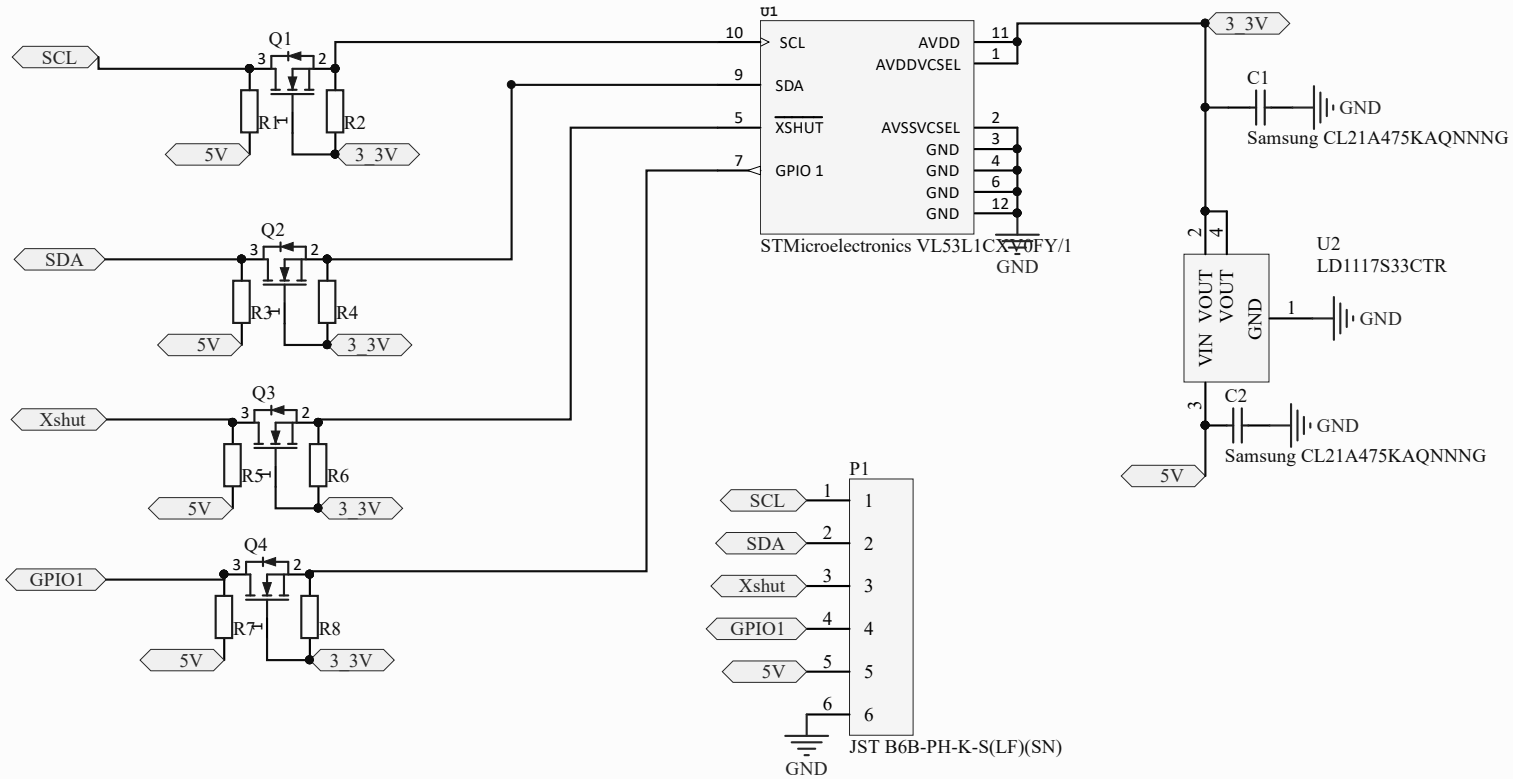

Title		
Size A	Number	Revision
Date: 6/17/2020		Sheet of
File: Distance_Sensor.SchDoc		Drawn By:

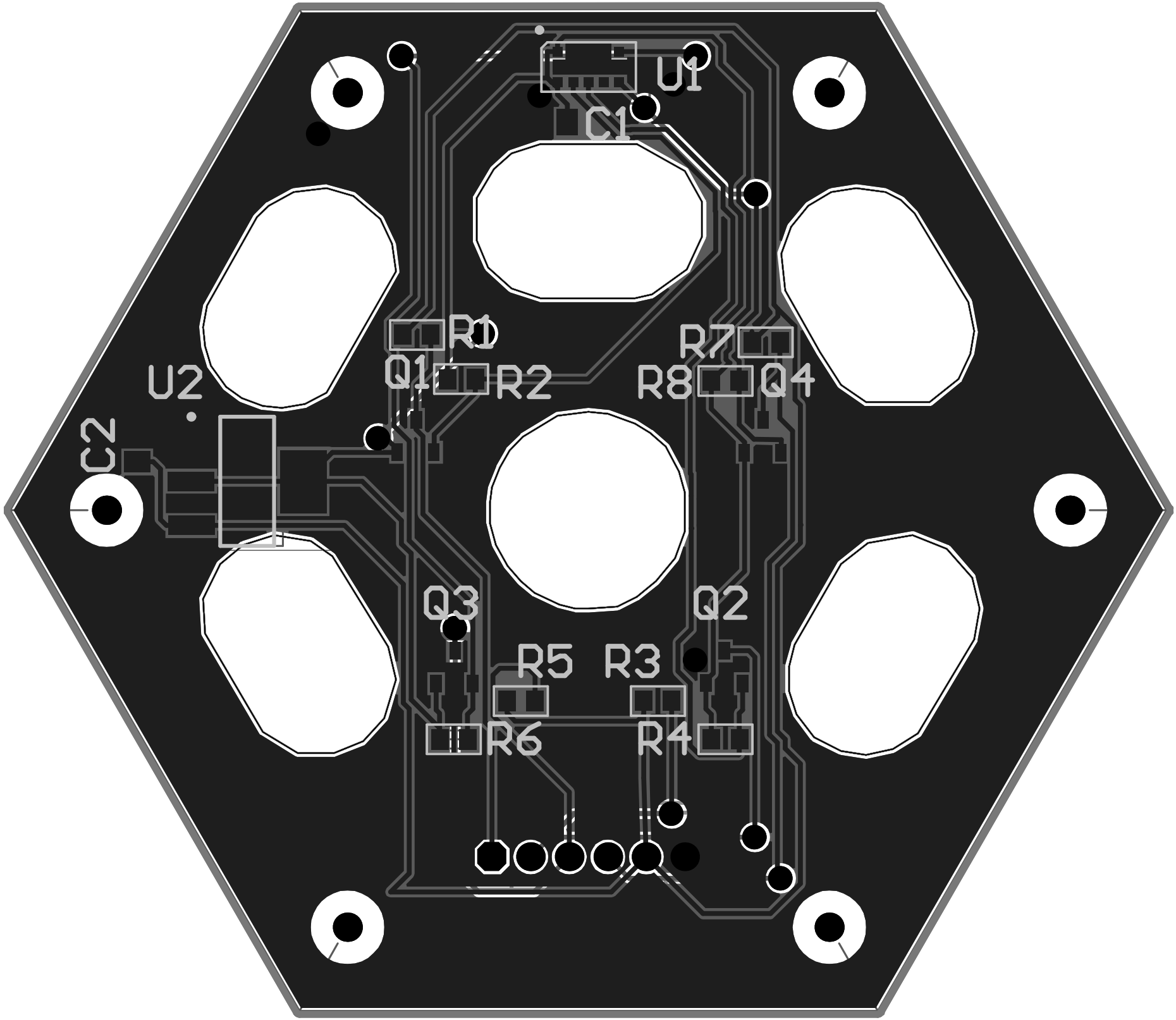
U1
C1
R1
R7
Q1
R2
R8
Q4
U2
C2
Q3
Q2
R5
R3
R6
R4