Question 1

a) Assumptions:
- costumerNumber is a unique idetifier for each costumer
- partNumber is a unique identifier for each part
- A customer can place many orders, but each part can appear on many orders
- Each order is handled by one employee
- An order can include many parts, and each part can appear on many orders
- Unit Price, Part Name, Type and Cage Code depend only on the part number
- Quantity Ordered depends on the combination of the Order and Part

b, c, d)

UNF

costumerName	costumerNumber	costumerType	date	time	employee	partNumber	partName	type	cageCode	quantityOrdered	unitPrice
Jeff Peterson	HG545887	Consumer	7/1/2024	10:30am	D.Harrison	10654	Float Control	Plumbing	G413	4	12
Jeff Peterson	HG545887	Consumer	7/1/2024	10:30am	D.Harrison	10456	Modulator	Electrical	H433	3	7
Jeff Peterson	HG545887	Consumer	7/1/2024	10:30am	D.Harrison	10776	House Assembly	Plumbing	G413	7	9
Jeff Peterson	HG545887	Consumer	7/1/2024	10:30am	D.Harrison	10657	Float Assembly	Plumbing	G413	5	10

1NF: OrderLine_1NF

costumerName	**costumerNumber (PK)**	costumerType	**date (PK)**	**time (PK)**	employee	**partNumber (PK)**	partName	type	cageCode	quantityOrdered	unitPrice
Jeff Peterson	HG545887	Consumer	7/1/2024	10:30am	D.Harrison	10654	Float Control	Plumbing	G413	4	12
Jeff Peterson	HG545887	Consumer	7/1/2024	10:30am	D.Harrison	10456	Modulator	Electrical	H433	3	7
Jeff Peterson	HG545887	Consumer	7/1/2024	10:30am	D.Harrison	10776	House Assembly	Plumbing	G413	7	9
Jeff Peterson	HG545887	Consumer	7/1/2024	10:30am	D.Harrison	10657	Float Assembly	Plumbing	G413	5	10

In order to turn into 1NF:
- To convert the data into 1NF, I removed the repeating groups by flattening the table so that each row represents a single part ordered at a specific date and time by a costumer. The order-level attributes are repeated on every row to ensure that all values ar atomic. A compiste primary key consisting of costumerNumber, date, time and partNumber were identified to uniquely distinguish each row. With atomic values and defined primary key, the table now satisfies the requirements of 1NF.

PK = costumerNumber + date + time + partNumber

2NF

costumer_2NF

costumerNumber (PK)	costumerName	costumerType
HG54587	Jeff Peterson	Consumer

orderLine_2NF

costumerNumber (PK-FK)	**date (PK-FK)**	**time (PK-FK)**	employee	**partNumber (PK-FK)**	quantityOrdered
HG545887	7/1/2024	10:30am	D.Harrison	10654	4
HG545887	7/1/2024	10:30am	D.Harrison	10456	3
HG545887	7/1/2024	10:30am	D.Harrison	10776	7
HG545887	7/1/2024	10:30am	D.Harrison	10657	5

contains

references

part_2NF

partNumber (PK)	partName	type	cageCode	unitPrice
10654	Float Control	Plumbing	G413	12
10456	Modulator	Electrical	H433	7
10776	House Assembly	Plumbing	G413	9
10657	Float Assembly	Plumbing	G413	10

In order to turn into 2NF:
- Although the table is in 1NF, it is not in 2NF because several non-key attributes depend on only part of the composite primary key. Comsumed related attributes depend solely on costumerNumber, and part-related attributes depend solely on partNumber. To remove these partial dependencies, customer information is separated into a Customer table and part information into a Part table. The remaining table keeps only attributes that depend on the full composite key, making sure that all non-key attributes are fully functionally dependent on the primary key and satisfying 2NF.

3NF

costumer_3NF

costumerNumber (PK)	costumerName	costumerType
HG54587	Jeff Peterson	Consumer

makes

order_3NF

costumerNumber (PK-FK)	**date (PK)**	**time (PK)**	employee
HG545887	7/1/2024	10:30am	D.Harrison

partNumber (PK)	partName	type	cageCode	unitPrice
10654	Float Control	Plumbing	G413	12
10456	Modulator	Electrical	H433	7
10776	House Assembly	Plumbing	G413	9
10657	Float Assembly	Plumbing	G413	10

has

part_3NF

costumerNumber (PK-FK)	**date (PK-FK)**	**time (PK-FK)**	**partNumber (PK-FK)**	quantityOrdered
HG545887	7/1/2024	10:30am	10654	4
HG545887	7/1/2024	10:30am	10456	3
HG545887	7/1/2024	10:30am	10776	7
HG545887	7/1/2024	10:30am	10657	5

refrences

In order to turn into 3NF:
The tables in 2NF still contain a transitive dependency because the employee attribute depends on the order event rather than directly on the full composite key of the order–part relationship. To resolve this, order-level information is separated into an Order table, and employee information is isolated into its own table. The relationship between orders and parts is maintained through an associative OrderPart table. After this decomposition, all non-key attributes depend only on the primary keys of their respective tables, and no transitive dependencies remain. The resulting schema is therefore in Third Normal Form (3NF).

Question 2

a) Assumptions:

- staffNo uniquely identifies a therapist, and therapistName depends on staffNo.
- patNo uniquely identifies a patient, and patName depends on patNo.
- An appointment involves one patient and one therapist at a specific date and time.
- A patient cannot have two appointments at the exact same date and time with the same therapist.
- Therapists may work at multiple branches across time, but a therapist works at only one branch per day, meaning (staffNo, appointmentDate) → branchNo.

b, c,d)

staffNo	therapistName	patNo	patName	appointmentDate	appointmentTime	branchNo
S1011	Fred Smith	P100	Lily White	9/12/2022	10:00	M15
S1011	Fred Smith	P105	Jill Baker	9/12/2022	12:00	M15
S1024	Heidi Pierce	P108	Andy McKee	9/12/2022	10:00	Q10
S1024	Heidi Pierce	P108	Andy McKee	9/14/2022	14:00	Q10
S1032	Richard Levin	P105	Jill Baker	9/14/2022	16:30	M15
S1032	Richard Levin	P110	Jimmy Winter	9/15/2022	18:00	B13

1NF

appointmnet_1NF

staffNo (PK)	therapistName	**patNo (PK)**	patName	**appointmentDate (PK)**	**appointmentTime (PK)**	branchNo
S1011	Fred Smith	P100	Lily White	9/12/2022	10:00	M15
S1011	Fred Smith	P105	Jill Baker	9/12/2022	12:00	M15
S1024	Heidi Pierce	P108	Andy McKee	9/12/2022	10:00	Q10
S1024	Heidi Pierce	P108	Andy McKee	9/14/2022	14:00	Q10
S1032	Richard Levin	P105	Jill Baker	9/14/2022	16:30	M15
S1032	Richard Levin	P110	Jimmy Winter	9/15/2022	18:00	B13

In order to turn into 1NF:

- To explicitly show 1NF, we identify a composite primary key that uniquely identifies each appointment row. Because an appointment is defined by the therapist, patient, and the date/time, we use staffNo + patNo + appointmentDate + appointmentTime as the composite key. All values are atomic, and each row is uniquely identified, so the table is in 1NF.

2NF & 3NF

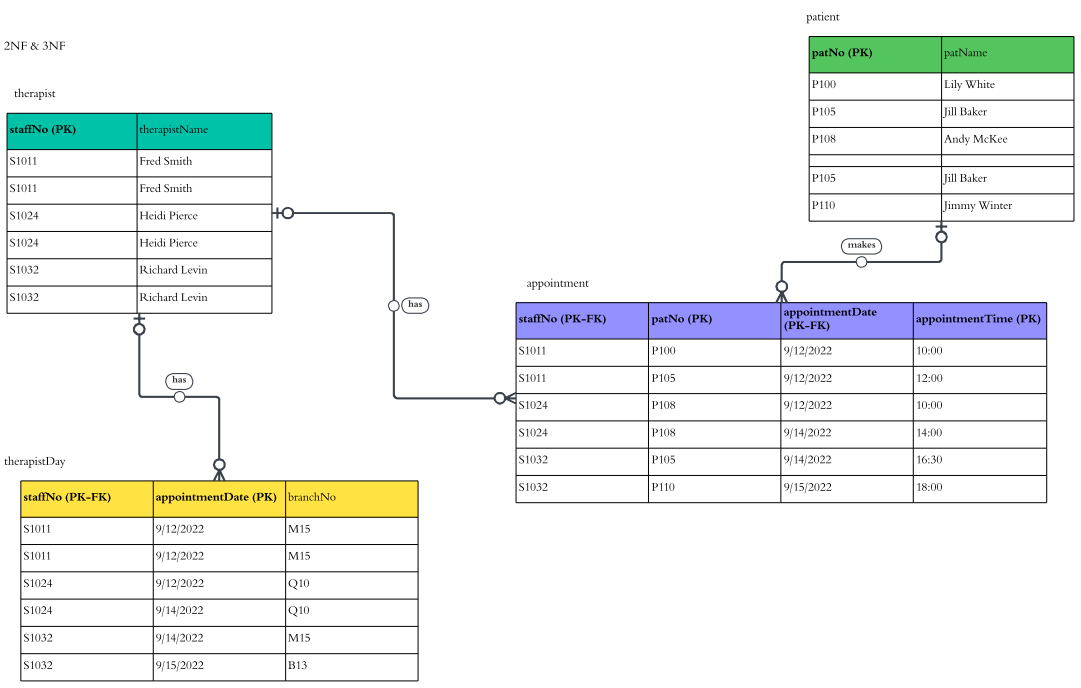

In order to turn into 2NF & 3NF :

- In order to turn the table into 2NF, the 1NF table is not in 2NF because there are attributes that depend only on part of the composite key. Specifically, therapistName depends only on staffNo, and patName depends only on patNo. Additionally, branchNo depends on (staffNo, appointmentDate) because a therapist works at only one branch per day, meaning branchNo depends on a subset of the composite key. To remove these partial dependencies, therapist and patient details are separated into their own tables, and the daily branch assignment is separated into its own table. As a result, the remaining Appointment table contains only primary key attributes, which means there are no partial or transitive dependencies, placing it in both 2NF and 3NF at the same time.

Question 3

a) Assumptions:

- eNo uniquely identifies an employee and determines eName.
- contractNo uniquely identifies a contract, and each contract applies to exactly one event, so contractNo → eventNo.
- eventNo uniquely identifies an event and determines eventLoc, so eventNo → eventLoc.
- The number of hours worked is recorded per employee per contract, meaning (eNo, contractNo) → hours.
- The same employee may work on multiple contracts, and the same contract may have multiple employees.

b, c, d)

eNo	contractNo	hours	eName	eventNo	eventLoc
1135	C1024	16	Smith J	H25	Queens
1057	C1024	24	Hocine D	H25	Queens
1068	C1025	28	White T	H4	Yonkers
1135	C1025	15	Smith J	H4	Yonkers
1135	C1026	10	Smith J	H25	Queens

1NF

eNo (PK)	**contractNo (PK)**	hours	eName	eventNo	eventLoc
1135	C1024	16	Smith J	H25	Queens
1057	C1024	24	Hocine D	H25	Queens
1068	C1025	28	White T	H4	Yonkers
1135	C1025	15	Smith J	H4	Yonkers
1135	C1026	10	Smith J	H25	Queens

In order to tun into 1NF:

- To show 1NF, we identify a primary key that uniquely identifies each row. Because each row represents the hours an employee worked on a specific contract, the composite key eNo + contractNo uniquely identifies each row. All attributes are atomic and each row is uniquely identifiable, so the table is in 1NF.

2NF

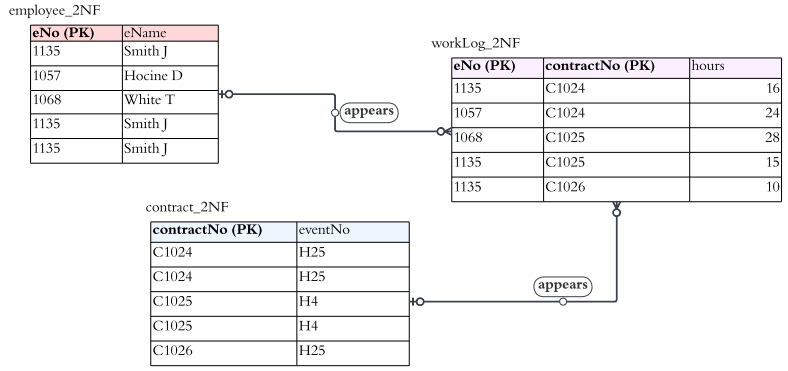

In order to tun into 2NF:

- The 1NF table is not in 2NF because there are attributes that depend only on part of the composite key. Specifically, eName depends only on eNo, and eventNo depends only on contractNo (since each contract applies to one event). To remove these partial dependencies, employee details are separated into an Employee table and contract details into a Contract table. The remaining table keeps only the attribute (hours) that depends on the full composite key.

3NF

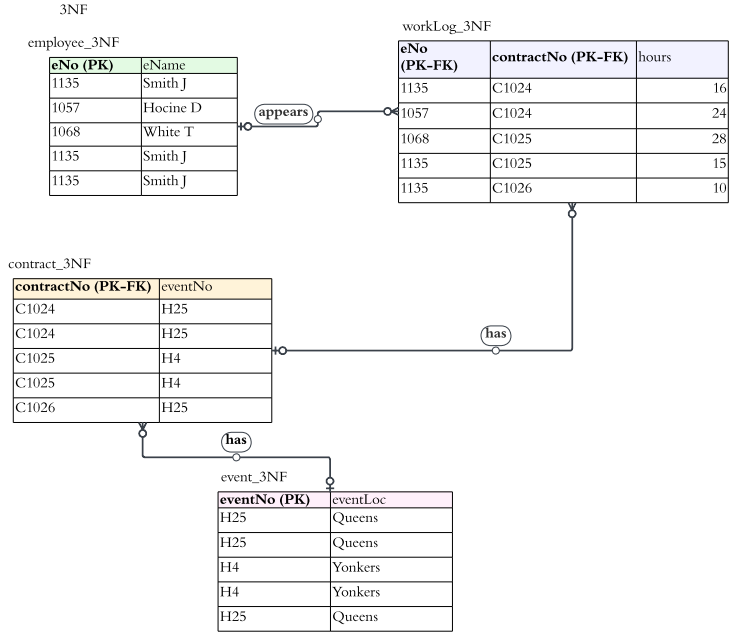

In order to tun into 3NF:

- The 2NF relations are not yet in 3NF because there is a transitive dependency: contractNo → eventNo → eventLoc. To remove this, event information is separated into its own Event table so that eventLoc depends only on eventNo.