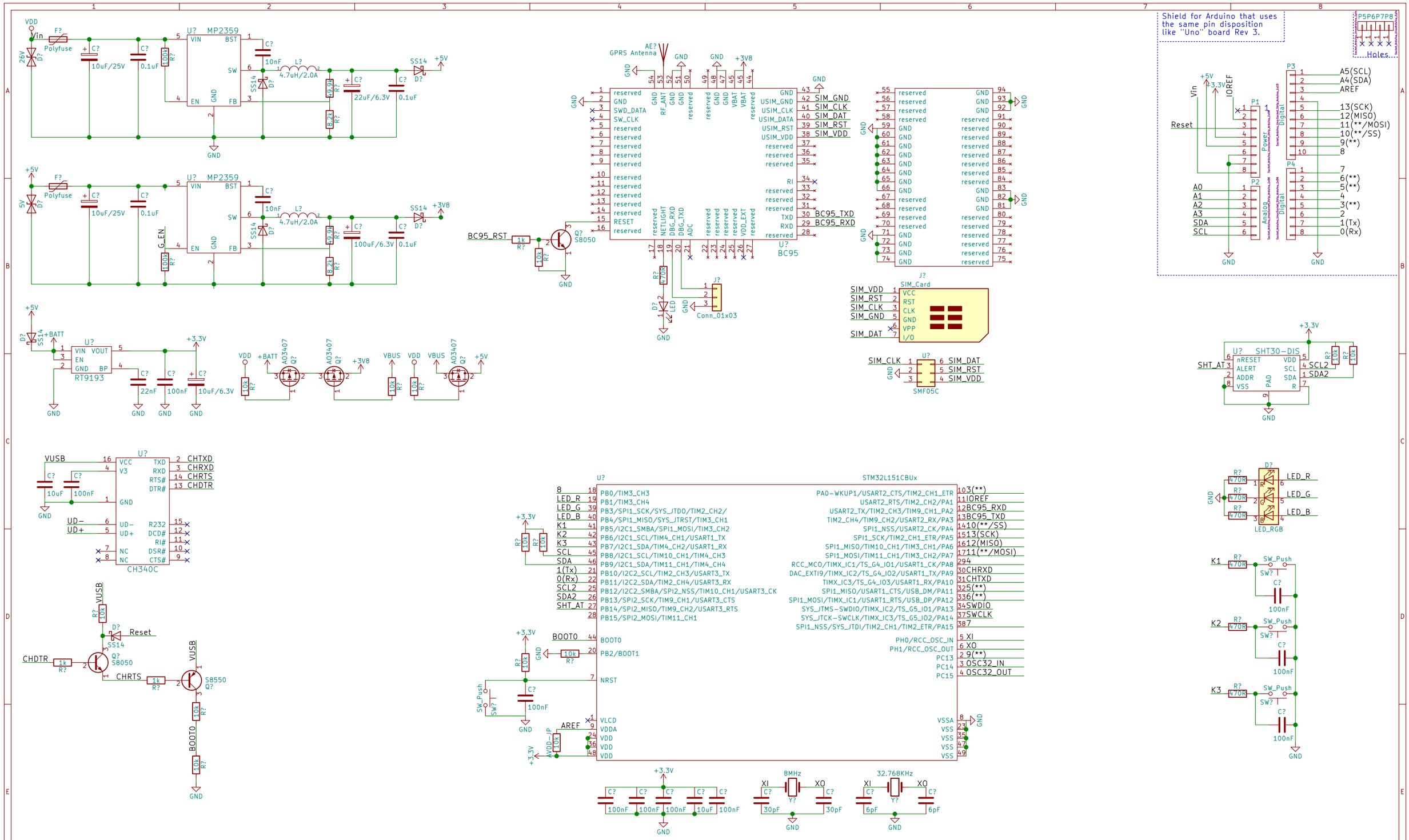

Sheet: /
File: PCB.sch

Title:

Size: A3	Date: lun. 30 mars 2015	Rev:
KiCad E.D.A. kicad 4.0.7		Id: 1/1