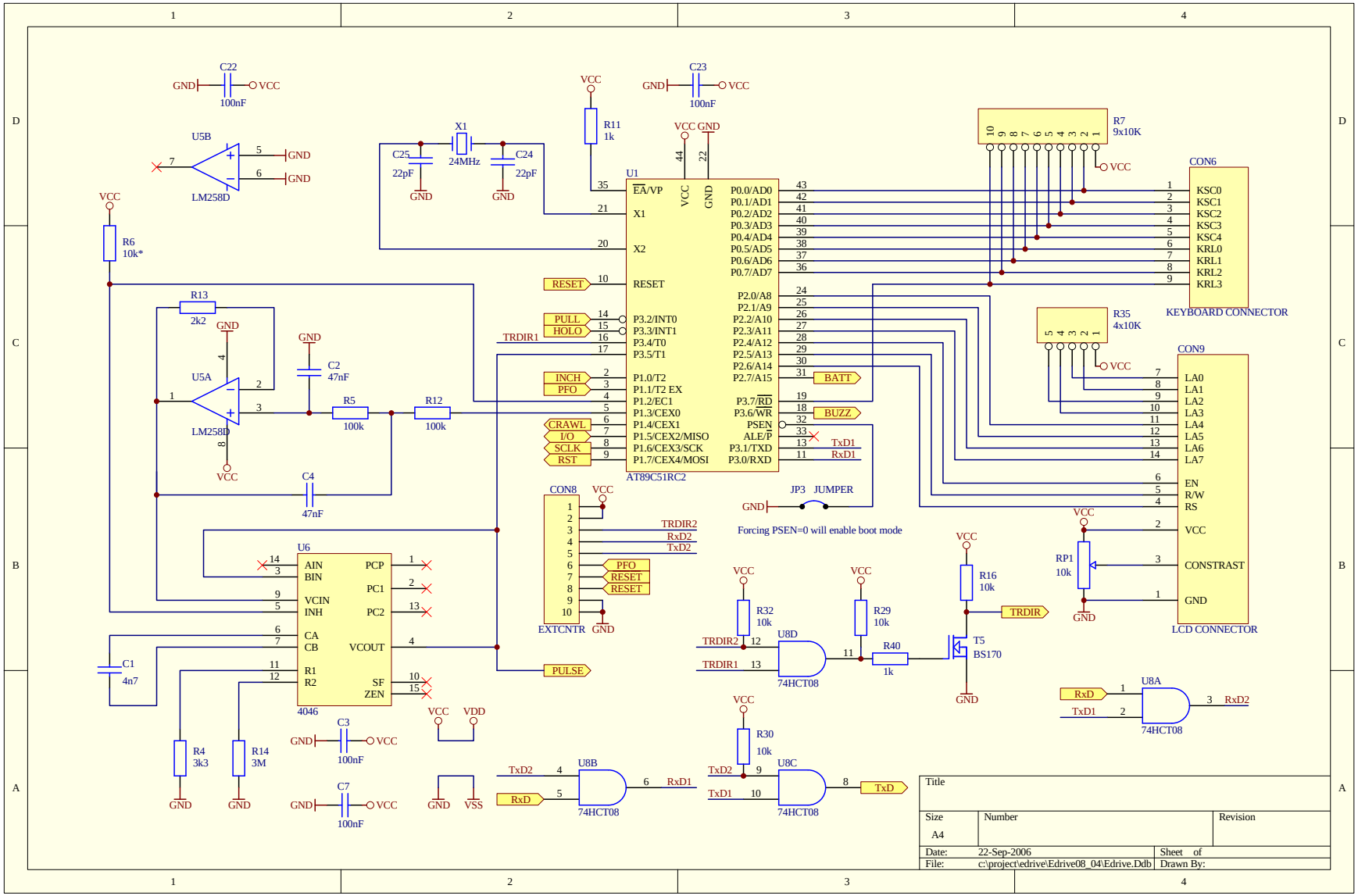
C22
100nF
GND
VCC
U5B
LM258D
R6
10k*
C23
100nF
R11
1k
X1
24MHz
C25
22pF
C24
22pF
U1
AT89C51RC2
EA/VP
X1
X2
RESET
P3.2/INT0
P3.3/INT1
P3.4/T0
P3.5/T1
P1.0/T2
P1.1/T2 EX
P1.2/EC1
P1.3/CEX0
P1.4/CEX1
P1.5/CEX2/MISO
P1.6/CEX3/SCK
P1.7/CEX4/MOSI
P0.0/AD0
P0.1/AD1
P0.2/AD2
P0.3/AD3
P0.4/AD4
P0.5/AD5
P0.6/AD6
P0.7/AD7
P2.0/A8
P2.1/A9
P2.2/A10
P2.3/A11
P2.4/A12
P2.5/A13
P2.6/A14
P2.7/A15
P3.7/RD
P3.6/WR
PSEN
ALE/P
P3.1/TXD
P3.0/RXD
R7
9x10K
CON6
KEYBOARD CONNECTOR
KSC0
KSC1
KSC2
KSC3
KSC4
KRL0
KRL1
KRL2
KRL3
R35
4x10K
CON9
LCD CONNECTOR
LA0
LA1
LA2
LA3
LA4
LA5
LA6
LA7
EN
R/W
RS
VCC
CONSTRAST
GND
RP1
10k
R13
2k2
U5A
LM258D
C2
47nF
R5
100k
R12
100k
C4
47nF
CON8
EXTCNTR
JP3 JUMPER
Forcing PSEN=0 will enable boot mode
U6
4046
AIN
BIN
VCIN
INH
CA
CB
R1
R2
PCP
PC1
PC2
VCOUT
SF
ZEN
C1
4n7
R4
3k3
R14
3M
C3
100nF
C7
100nF
VDD
VSS
R32
10k
R29
10k
R16
10k
U8D
74HCT08
R40
1k
T5
BS170
U8A
74HCT08
U8B
74HCT08
R30
10k
U8C
74HCT08
RESET
PULL
HOLO
TRDIR1
INCH
PFO
CRAWL
I/O
SCLK
RST
BATT
BUZZ
TxD1
RxD1
TRDIR2
RxD2
TxD2
PULSE
TRDIR
RxD
TxD
Title
Size
A4
Number
Revision
Date: 22-Sep-2006
Sheet of
File: c:\project\edrive\Edrive08_04\Edrive.Ddb
Drawn By: