FOREWORD

This wiring diagram incorporates the wiring schematics of the Mazda CX-5 and available optional equipment. Actual vehicle wiring may vary slightly depending on optional equipment or local specifications, or both.

For proper repair and maintenance, a thorough familiarization with this manual is important, and it should always be kept in a handy place for quick and easy reference.

All the contents of this manual, including drawings and specifications, are the latest available at the time of printing.
As modifications affecting repair or maintenance occur, relevant information supplementary to this volume will be made available at Mazda dealers. This manual should be kept up-to-date.

Ford Motor Company reserves the right to alter the specifications and contents of this manual without obligation or advance notice.

All rights reserved. No part of this book may be reproduced or used in any form or by any means, electronic or mechanical-including photocopying and recording and the use of any kind of information storage and retrieval system-without permission in writing.

WARNING

Servicing a vehicle can be dangerous. If you have not received service-related training, the risks of injury, property damage, and failure of servicing increase. The recommended servicing procedures for the vehicle in this workshop manual were developed with Mazda-trained technicians in mind. This manual may be useful to non-Mazda trained technicians, but a technician with our service-related training and experience will be at less risk when performing service operations. However, all users of this manual are accepted at least to know general safety procedures.

This manual contains “Warnings” and “Cautions” applicable to risks not normally encountered in a general technician’s experience. They should be followed to reduce the risk of injury and the risk that improper service or repair may damage the vehicle or render it unsafe. It is also important to understand that the “Warnings” and “Cautions” are not exhaustive. It is impossible to warn of all the hazardous consequences that might result from failure to follow the procedures.

The procedures recommended and described in this manual are effective methods of performing service and repair. Some require tools specifically designed for a specific purpose. Persons using procedures and tools which are not recommended by Mazda Motor Corporation must satisfy themselves thoroughly that neither personal safety nor safety of the vehicle will be jeopardized.

The contents of this manual, including drawings and specifications, are the latest available at the time of printing, and Mazda Motor Corporation reserves the right to change the vehicle designs and alter the contents of this manual without notice and without incurring obligation.

Parts should be replaced with genuine Mazda replacement parts or with parts which match the quality of genuine Mazda replacement parts. Persons using replacement parts of lesser quality than that of genuine Mazda replacement parts must satisfy themselves thoroughly that neither personal safety nor safety of the vehicle will be jeopardized. Mazda Motor Corporation is not responsible for any problems which may arise from the use of this manual. The cause of such problems includes but is not limited to insufficient service related training, use of improper tools, use of replacement parts of lesser quality than that of genuine Mazda replacement parts, or not being aware of any revision of this manual.

©2012 FMCSA
Ford Motor Company
of Southern Africa

MAZDA CX-5 Bodyshop Manual

APPLICATION:
This manual is applicable to vehicles beginning with the Vehicle Identification Numbers (VIN) shown on the following page.

CONTENTS

Title	Section
GENERAL INFORMATION	00
BODY STRUCTURE	80A
PANEL REPLACEMENT	80B
WATER-PROOF AND RUST PREVENTIVE	80C
DIMENSIONS	80D
PLASTIC BODY PARTS	80E
CONSTRUCTION STANDARD VALUES	80F

© 2012 Ford Motor Company of Southern Africa

GENERAL INFORMATION

00
SECTION

GENERAL INFORMATION . . . 00-00

00-00 GENERAL INFORMATION

VEHICLE IDENTIFICATION NUMBER (VIN) CODE 00-00–2
European (L.H.D. U.K.) China specs. 00-00–2
Australian, General (R.H.D.) specs. . . 00-00–2
General (L.H.D.) specs. 00-00–3
VEHICLE IDENTIFICATION NUMBERS (VIN). 00-00–4
European (L.H.D. U.K.) specs. 00-00–4
Australian, General (R.H.D.) specs. . . . 00-00–4
General (L.H.D.) specs. 00-00–4
HOW TO USE THIS MANUAL. 00-00–4
Efficient Replacement of Body Panels 00-00–4
Symbols of Panel Replacement 00-00–5
Body Dimensions (Flat-plane Dimensions). 00-00–5
Body Dimensions (Straight-line Dimensions) 00-00–8
Symbols of Body Dimensions 00-00–9
AIR BAG SYSTEM SERVICE WARNINGS 00-00–10
Air Bag Module Inspection 00-00–10
Air Bag Module Handling 00-00–10
Side Air Bag Module Handling 00-00–10
SAS Control Module Handling 00-00–10
Crash Zone Sensor Handling. 00-00–11
Side Air Bag Sensor Handling 00-00–11
Pre-tensioner Seat Belt Inspection . . . 00-00–11
SERVICE PRECAUTIONS. 00-00–11
Arrangement of Workshop 00-00–11
Safety Precautions 00-00–12
Vehicle Protection 00-00–12
Remove Dangerous Articles 00-00–12
Use of Pulling Equipment. 00-00–12
Prevent Short Circuits 00-00–12
EFFICIENT REMOVAL OF BODY PANELS. 00-00–13
Body Measurements 00-00–13
Prevention of Body Deformation 00-00–13
Selection of Cut-and-join Locations . . . 00-00–14
Removal of Associated Parts 00-00–14
Rough Cutting of Damaged Panel. 00-00–14
EFFICIENT INSTALLATION OF BODY PANELS. 00-00–14
Checking Preweld Measurements And Watching 00-00–14
Welding Notes 00-00–15
Spot Welding Notes. 00-00–15
Checking Weld Strength 00-00–16
INSTALLATION PREPARATIONS 00-00–16
Rough Cutting of New Parts 00-00–16
Determination of Welding Method. 00-00–17
Making Holes for Arc Welding 00-00–17
Application of Weld-through Primer . . . 00-00–17
ANTICORROSION, SOUND INSULATION, AND VIBRATION INSULATION 00-00–18
Body Sealing 00-00–18
Application of Undercoating 00-00–18
Application of Rust Inhibitor 00-00–18
Application of Dumping Sheet. 00-00–18
ABBREVIATION 00-00–19
BODY COLORS 00-00–19
Color Code and Color Name. 00-00–19
Verification of Primary Color Mixture for Body Color 00-00–19
IDENTIFICATION NUMBER LOCATIONS 00-00–19
Vehicle Identification Number (VIN) . . . 00-00–19
Engine Identification Type/Number 00-00–20

GENERAL INFORMATION

VEHICLE IDENTIFICATION NUMBER (VIN) CODE

id000000600800

European (L.H.D. U.K.) China specs.

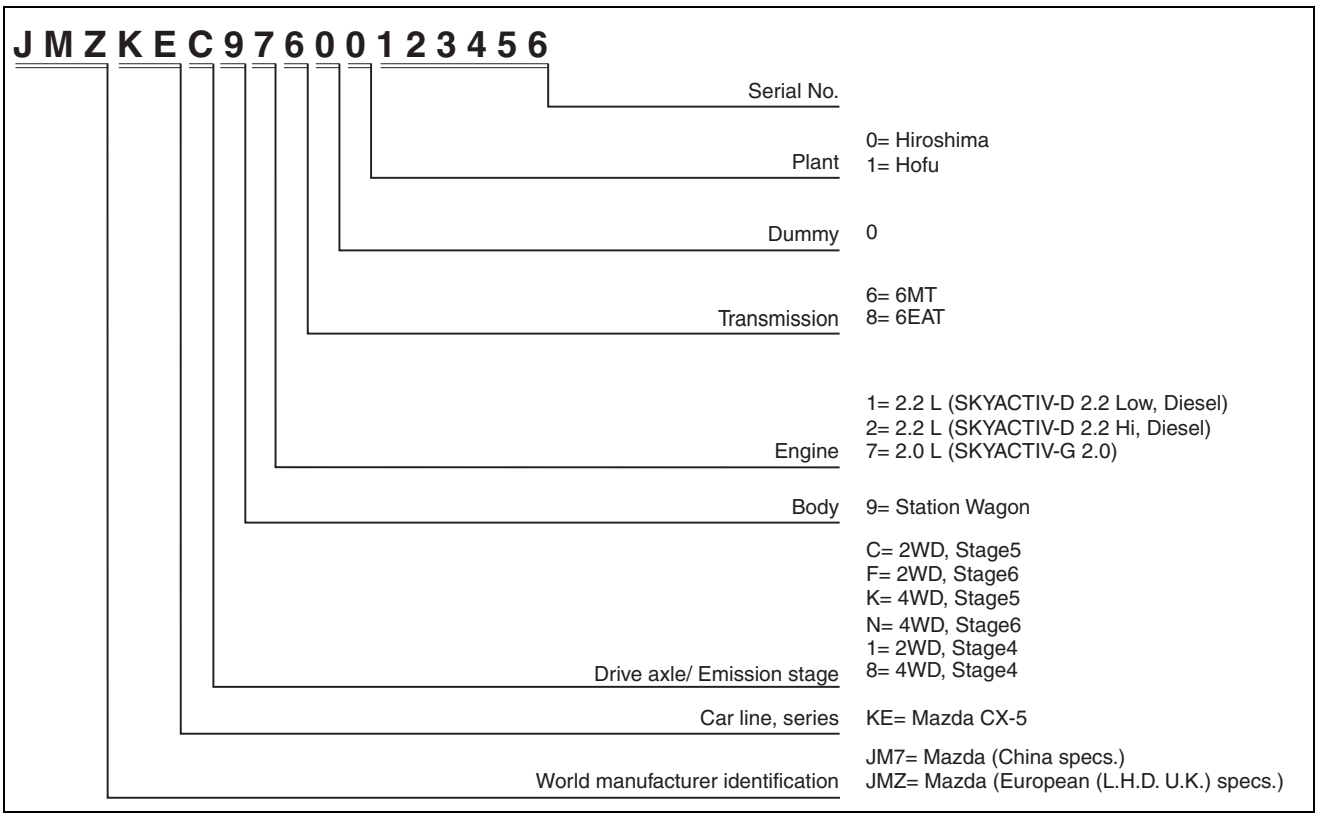

ac5wzw0000457

Australian, General (R.H.D.) specs.

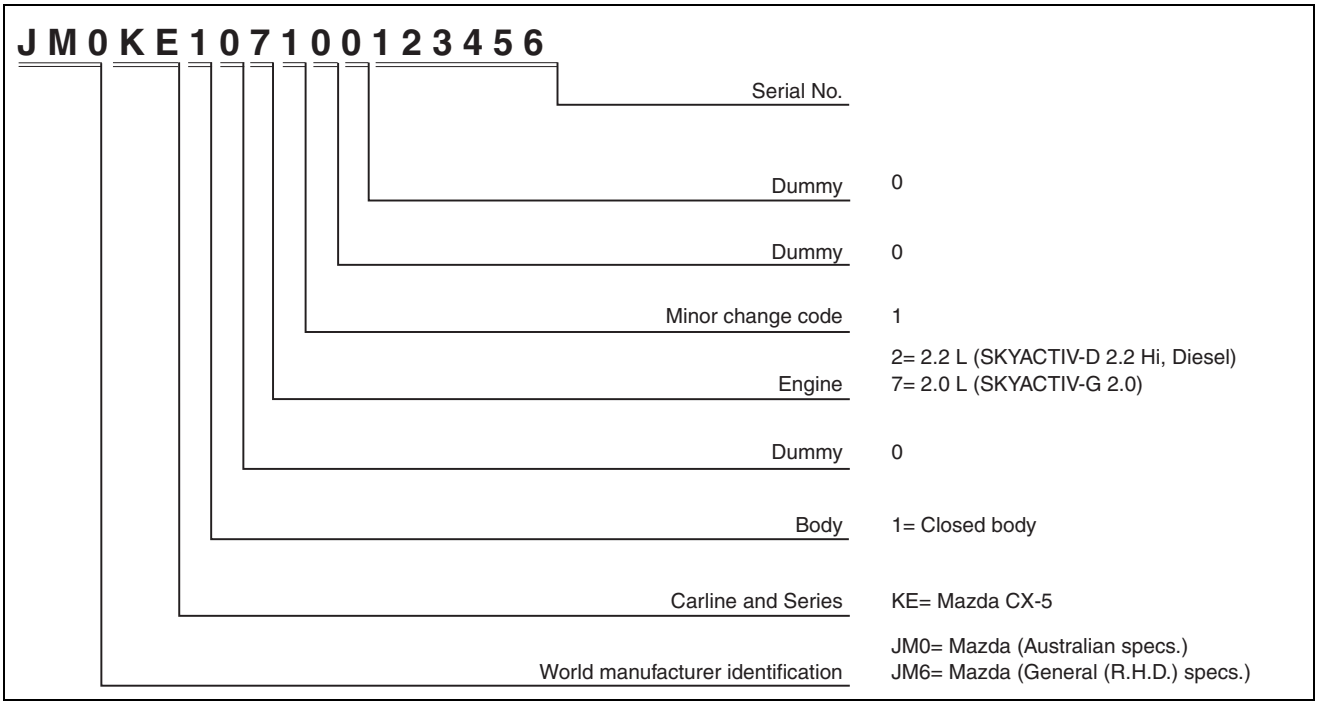

ac5wzw0000457

GENERAL INFORMATION

General (L.H.D.) specs.
Except for Algeria

J M 8 K E 2 W 7 0 D 0 1 2 3 4 5 6

	Serial No.	
	Plant	0=Hiroshima 1=Hofu
Israel:	Dummy	Z
Except Israel:	Model year	D=2013 (J0b#1-)
Israel:	Transmission	8=6EAT
Except Israel:	CheckDigit (*) code	0 to 9 and X
	Engine	7= 2.0 L (SKYACTIV-G 2.0)
Israel:		9= Station Wagon
Except Israel:	Body	W= Station Wagon
Israel:		C= 2WD stage5b/OBD-stage5+ K= 4WD stage5b/OBD-stage5+
Except Israel:	Axle configuration, GVW Body	2= 2WD with Curtain & Side airbags 4= 4WD with Curtain & Side airbags
	Carline and Series	KE= Mazda CX-5
Israel:		JMZ= Mazda (General (L.H.D.) specs.) (for Israel)
Except Israel:	WMI	JM8= Mazda (General (L.H.D.) specs.) (Except for Israel)

ac5wzw0000457

Algeria only

ⓜ **K E 1 0 7 1** ⓜ **1 2 3 4 5 6** ⓜ

Serial No.	
Model change code	2
Engine type	7= 2.0 L (SKYACTIV-G 2.0, with out i-stop)
Body style	10= Closed body
Vehicle type	BL= Mazda CX-5

ⓜ :This mark is used only for Algerian model, in order to identify the manufacturer.

ac5wzw0000457

GENERAL INFORMATION

VEHICLE IDENTIFICATION NUMBERS (VIN)

id000000600100

European (L.H.D. U.K.) specs.

JMZ KE19760# 100001—
JMZ KE19780# 100001—
JMZ KE89780# 100001—
JMZ KEC9760# 100001—
JMZ KEF9160# 100001—
JMZ KEF9180# 100001—
JMZ KEK9760# 100001—
JMZ KEK9780# 100001—
JMZ KEN9160# 100001—
JMZ KEN9180# 100001—
JMZ KEN9260# 100001—
JMZ KEN9280# 100001—
JM7 KE197**# 100001—
JM7 KE897**# 100001—

ac5wzw0000457

Australian, General (R.H.D.) specs.

JM0 KE102100 100001—
JM0 KE107100 100001—
JM6 KE1071*0# 100001—

ac5wzw0000458

General (L.H.D.) specs.
Except for Algeria

JMZ KEC978*# 100001—
JMZ KEK978*# 100001—
JM8 KE2W7**# 100001—
JM8 KE4W7**# 100001—

ac5wzw0000458

Algeria only

ⓜ KE1071 ⓜ 100001 ⓜ —

ⓜ: This mark is used only for Algerian model, in order to identify the manufacturer.

ac5wzw0000458

HOW TO USE THIS MANUAL

id000000600900

Efficient Replacement of Body Panels

- This section contains information on the body panels in regard to the welding types, number of spot welds, and cut-and-join locations that are necessary for panel removal and installation.
- The type of weld and position are indicated by symbols.
- Some sections have notes concerning the operation being performed. Thoroughly read and understand the notes before carrying out any procedures.

GENERAL INFORMATION

Example

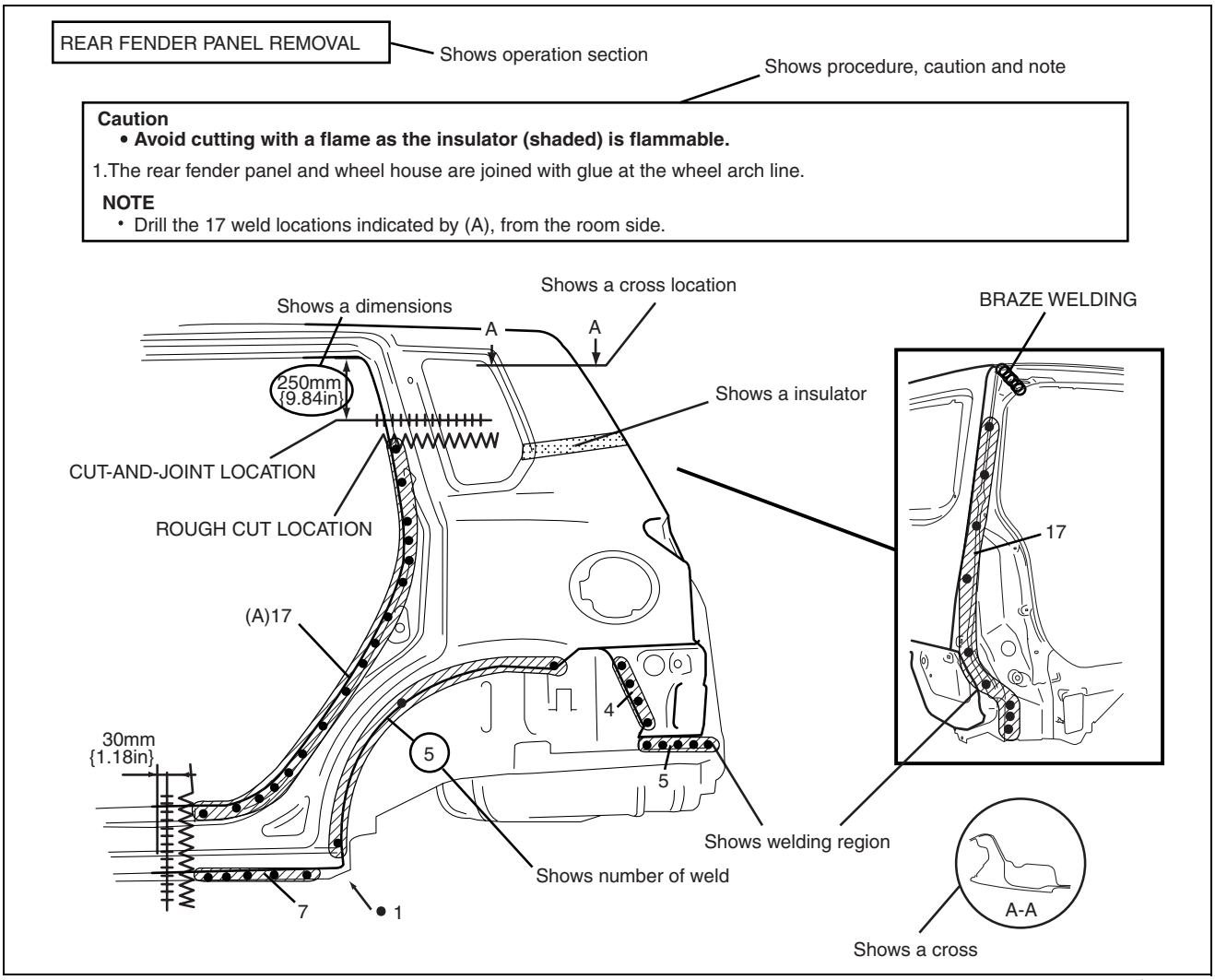

acxuub00000031

Symbols of Panel Replacement

- The following 6 symbols are used to indicate the type of weld that is used when replacing body panels.

SYMBOL	MEANING
●	Spot welding
■	Arc welding (plug welding)
+	Arc welding (spot welding)

SYMBOL	MEANING
|||||||||	Continuous arc welding (Cut-and-join location)
⊂⊃⊂⊃⊂⊃	Brazing welding (oxyacetylene welding)
∧∨∧∨	Rough cut location

ac5wzb00000204

Body Dimensions (Flat-plane Dimensions)

- Flat-plane dimensions are the dimensions measured by projecting certain reference points onto a plane

GENERAL INFORMATION

surface.

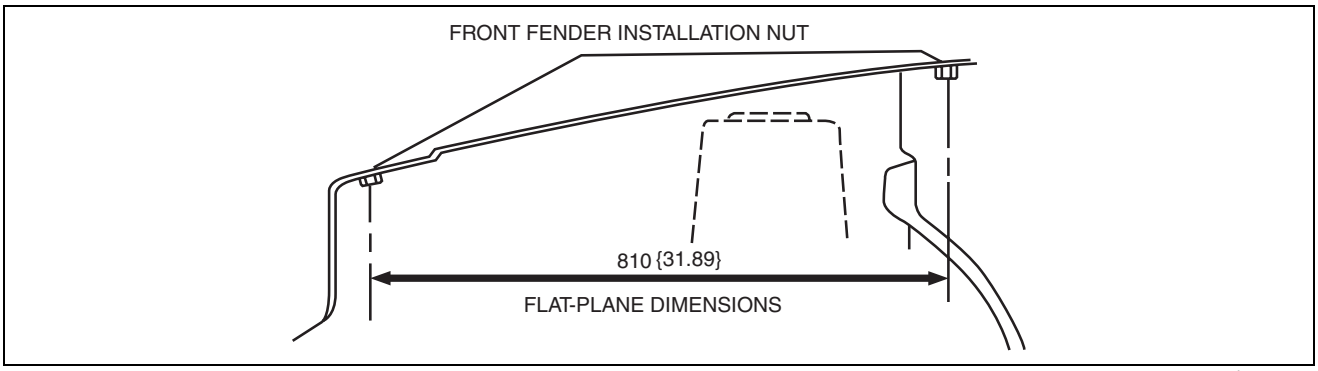

acxuub00000033

- When there are no specific indications, the standard points and dimensions are symmetrical in regard to the center of the vehicle.
- The hypothetical lines may differ according to the vehicle model.
- The schematic diagram shows the vehicle as it is projected from the underbody.

GENERAL INFORMATION

Example

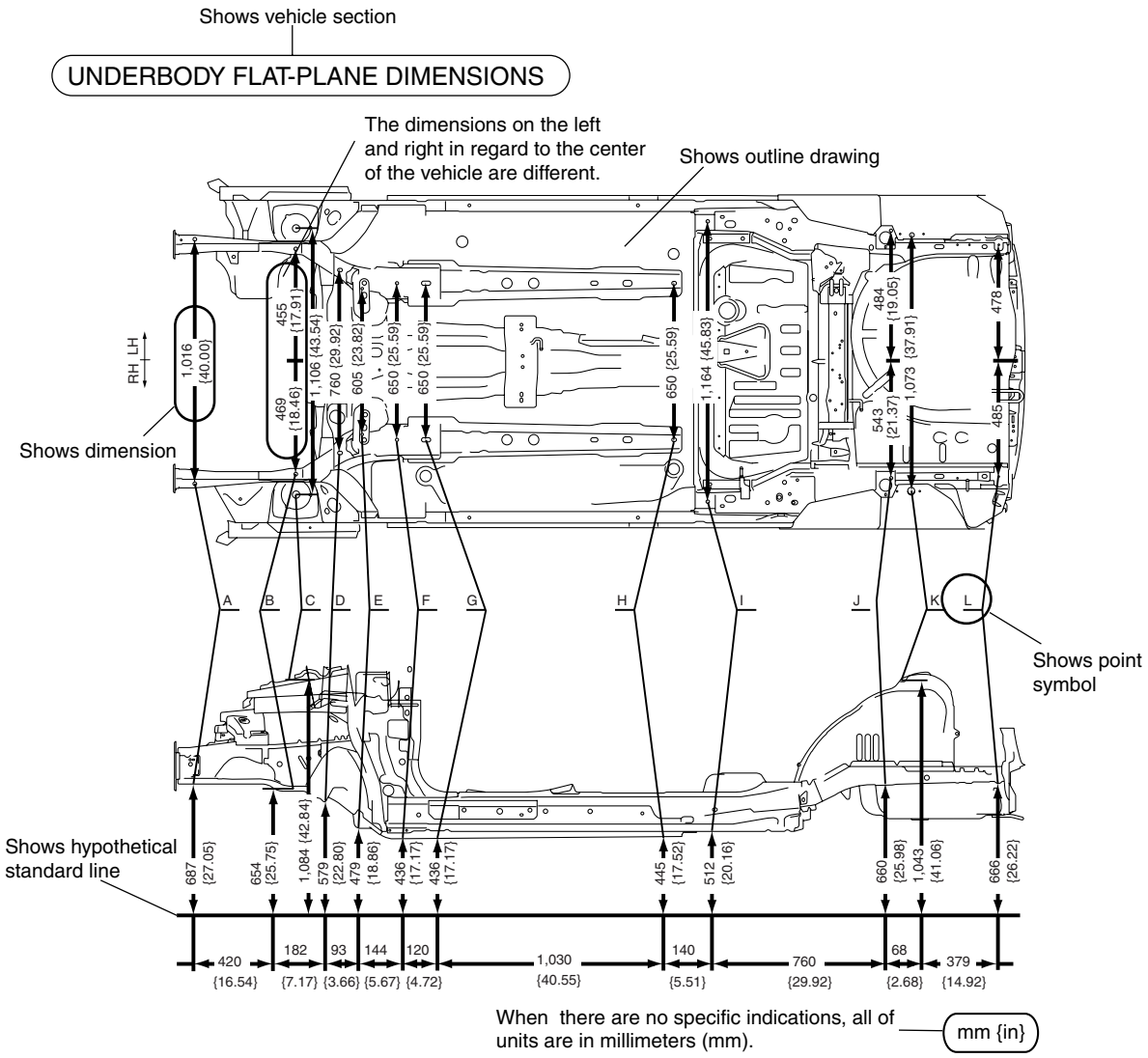

Point symbol	Designation	Hole diameter or bolt or nut size mm {in}
A	Crossmember No,1 standard hole	ϕ 16 {0.62}
B	Front side frame standard hole	ϕ 16 {0.62}
C	Front suspension mounting block surface hole center	ϕ 80 {3.14}
D	Front suspension mounting bolt	M14 {0.55}
E	Front frame rear standard hole	ϕ 16 {0.62}

Shows bolt size

Point symbol	Designation	Hole diameter or bolt or nut size mm {in}
F	Front frame rear standard hole	ϕ 18 {0.62}
G	Rear side frame standard hole	ϕ 16 {0.62}
H	Link bracket	17 × 29.5 {0.66×1.16}
I	Rear suspension housing	ϕ 12 {0.47}
J	Rear side frame standard hole	ϕ 16 {0.62}
K	Rear suspension housing	ϕ 31 {1.22}
L	Rear side frame standard hole	ϕ 12 {0.47}

Shows slot

Shows hole diameter

ac9uub00000034

GENERAL INFORMATION

Body Dimensions (Straight-line Dimensions)

- Straight-line dimensions are the actual dimensions between two standard points.

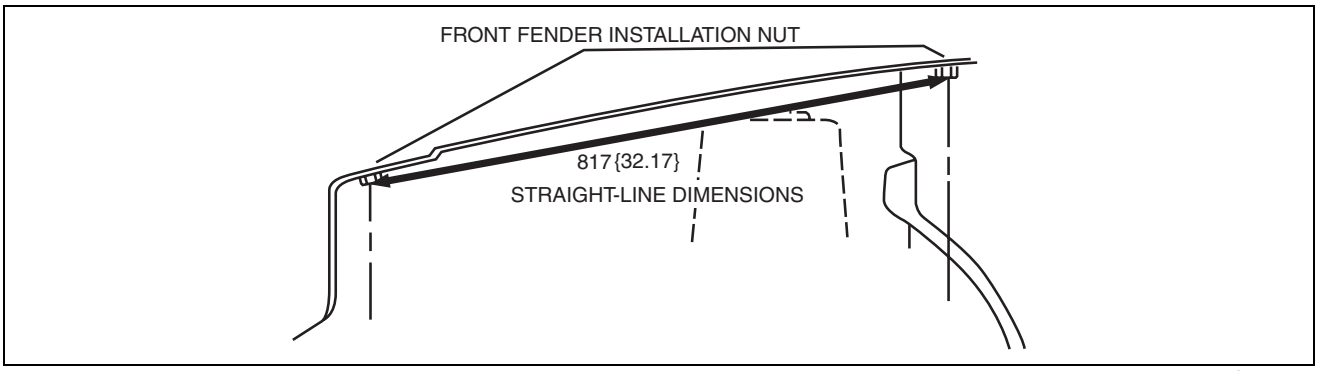

acxuub00000035

- When there are no specific indications, the standard points and dimensions are symmetrical in regard to the center of the vehicle.

GENERAL INFORMATION

Example

ROOM STRAIGHT-LINE DIMENSIONS (1)

Shows vehicle section

Shows point symbol

Shows outline drawing

Shows dimension

Shows dimension location

No indication are shown within the outline drawing.

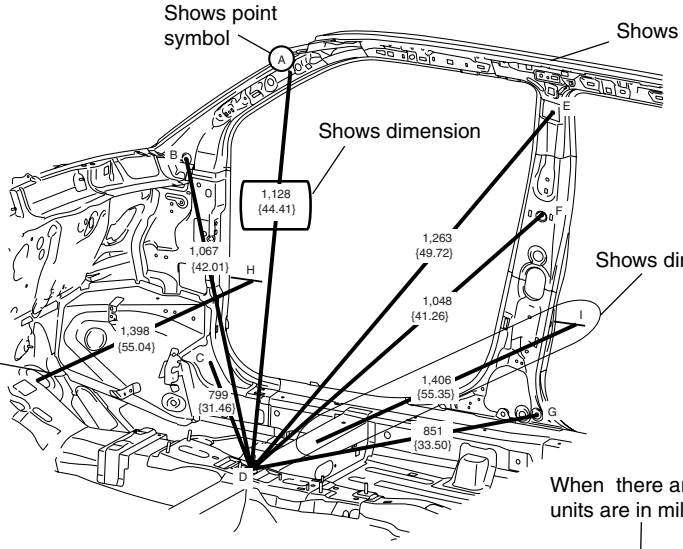

When there are no specific indications, all of units are in millimeters (mm).

mm {in}

Shows point indication
Without apostrophe:RH
With apostrophe:LH

Shows details of the standard point location

Shows position and shape of the points

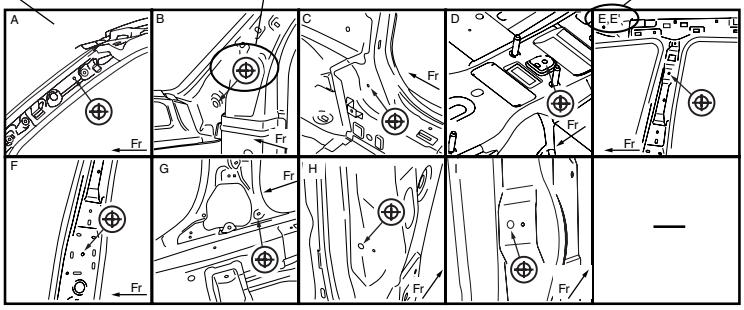

Point symbol	Designation	Hole diameter or bolt or nut size mm {in}
A	Front pillar inner designation	ϕ 16 {0.62}
B	Front pillar inner designation	ϕ 17 {0.67}
C	Harness installation hole	ϕ 31 {1.22}
D	Front floor pan designation	M14 {0.55}
E	Adjuster installation hole	ϕ 16 {0.62}

Shows bolt size

Point symbol	Designation	Hole diameter or bolt or nut size mm {in}
F	Trim installation hole	ϕ 18 {0.71}
G	Harness installation hole	ϕ 16 {0.62}
H	Chaker bracket installation hole	17 × 29.5 {0.66×1.16}
I	Chaker bracket installation hole	ϕ 12 {0.47}

Shows hole diameter

Shows slot

am3uub0000007

Symbols of Body Dimensions

- The following 8 symbols are used to indicate the standard points.

SYMBOL	MEANING
⊕	Center of circular hole
⊕	Center elliptical hole
⊕ ⊕	Notch
↙	Panel seam, bead, etc.

SYMBOL	MEANING
← (arrow only)	Bolt tip
⊞	Center of rectangular-shaped hole
⊡	Edge of rectangular-shaped hole

acxuub00000037

GENERAL INFORMATION

AIR BAG SYSTEM SERVICE WARNINGS

id000000920000

Air Bag Module Inspection

- **Inspecting an air bag module using a tester can operate (deploy) the air bag module, which may cause serious injury. Do not use a tester to inspect an air bag module. Always use the on-board diagnostic function to diagnose the air bag module for malfunctions.**

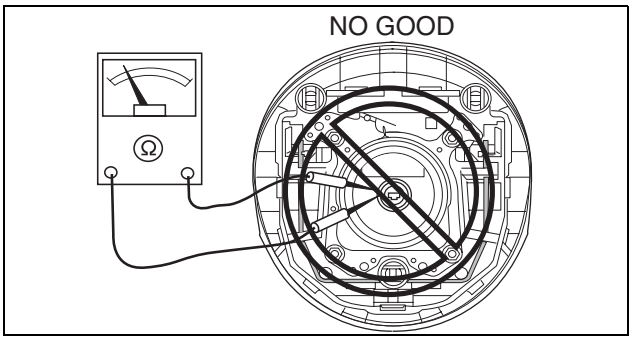

ac5wzw0000205

Air Bag Module Handling

- **Before removing the air bag module or disconnecting the air bag module connector, always switch the ignition to off, disconnect the negative battery cable, and then wait for 1 min or more to allow the backup power supply of the SAS control module to deplete its stored power.**
- **Handling a live (undeployed) air bag module that is pointed toward your body could result in serious injury if the air bag module were to accidentally operate (deploy). When carrying a live (undeployed) air bag module, point the deployment surface away from your body to lessen the chance of injury in case it operates (deploys).**

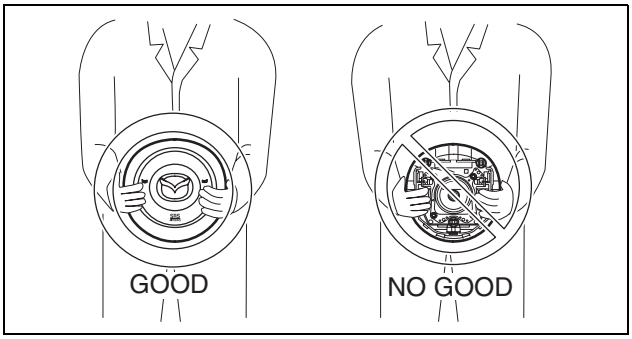

ac5wzw0000205

- **A live (undeployed) air bag module placed with its deployment surface to ground is dangerous. If the air bag module were to accidentally operate (deploy), it could cause serious injury. Always place a live (undeployed) air bag module with its deployment surface up.**

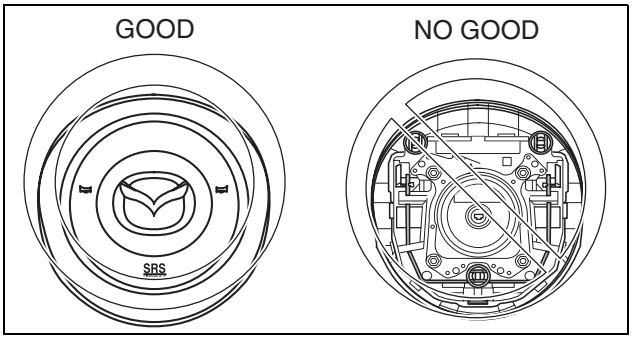

ac5wzw0000205

Side Air Bag Module Handling

- **When a side air bag module operates (deploys) due to a collision, the interior of the seat back (pad, frame, trim) may become damaged. If a side air bag does not operate (deploy) normally from a seat back that has been reused, a serious accident may result. After a side air bag has operated (deployed), always replace both the side air bag module and the seat back (pad, frame, trim) with new parts. After servicing, verify that the seat operates normally and that the wiring harness is not caught.**

SAS Control Module Handling

- **When connecting or disconnecting the SAS control module connector, a person charged with static electricity could accidentally operate (deploy) each air bag module. Before connecting or disconnecting the SAS control module connector, discharge any charged static electricity from your body.**
- **Removing the SAS control module or disconnecting the SAS control module connector with the ignition ON can activate the sensor in the SAS control module and operate (deploy) the air bags and pre-tensioner seat belts, which may cause serious injury. Before removing the SAS control module or disconnecting the SAS control module connector, always switch the ignition to off, disconnect the negative battery cable, and then wait for 1 min or more to allow the backup power supply of the SAS control module to deplete its stored power.**

GENERAL INFORMATION

- **Connecting the SAS control module connector with the SAS control module not securely fixed to the vehicle is dangerous. The sensor in the SAS control module could send an electrical signal to the air bag modules and pre-tensioner seat belts. This will operate (deploy) the air bags and pre-tensioner seat belts, which may result in serious injury. Therefore, before connecting the connector, securely fix the SAS control module to the vehicle.**
- **Because a sensor is built into the SAS control module, once the air bags and pre-tensioner seat belts have operated (deployed) due to a collision or other causes, the SAS control module must be replaced with a new one even if the used one does not have any visible external damage or deformation. The used SAS control module may have been damaged internally, which may cause improper operation. If the SAS control module is reused, the air bags and pre-tensioner seat belts may not operate (deploy) normally, which could result in a serious accident. Always replace the SAS control module with a new one. The SAS control module cannot be bench-checked or self-checked.**

Crash Zone Sensor Handling

- **Removing the crash zone sensor or disconnecting the crash zone sensor connector with the ignition ON can activate the crash zone sensor and operate (deploy) the air bags and pre-tensioner seat belts, which may cause serious injury. Before removing the crash zone sensor or disconnecting the crash zone sensor connector, always switch the ignition to off, disconnect the negative battery cable, and then wait for 1 min or more to allow the backup power supply of the SAS control module to deplete its stored power.**
- **If the crash zone sensor is subjected to shock or the sensor is disassembled, the air bags and pre-tensioner seat belts may accidentally operate (deploy) and cause injury, or the system may fail to operate normally and cause a serious accident. Do not subject the crash zone sensor to shock or disassemble the sensor.**
- **Because a sensor is built into the crash zone sensor, once the air bags and pre-tensioner seat belts have operated (deployed) due to a collision or other causes, the crash zone sensor must be replaced with a new one even if the used one does not have any visible external damage or deformation. If the crash zone sensor is reused, the air bags and pre-tensioner seat belts may not operate (deploy) normally, which could result in a serious accident. Always replace the crash zone sensor with a new one. The crash zone sensor cannot be bench-checked or self-checked.**

Side Air Bag Sensor Handling

- **Removing the side air bag sensor or disconnecting the side air bag sensor connector with the ignition ON can activate the side air bag sensor and operate (deploy) the side air bag, which may cause serious injury. Before removing the side air bag sensor or disconnecting the side air bag sensor connector, always switch the ignition to off, disconnect the negative battery cable, and then wait for 1 min or more to allow the backup power supply of the SAS control module to deplete its stored power.**
- **If the side air bag sensor is subjected to shock or the sensor is disassembled, the side air bag may accidentally operate (deploy) and cause injury, or the system may fail to operate normally and cause a serious accident. Do not subject the side air bag sensor to shock or disassemble the sensor.**
- **Because a sensor is built into the side air bag sensor, once the air bag has operated (deployed) due to a collision or other causes, the side air bag sensor must be replaced with a new one even if the used one does not have any visible external damage or deformation. If the side air bag sensor is reused, the side air bag may not operate (deploy) normally, which could result in a serious accident. Always replace the side air bag sensor with a new one. The side air bag sensor cannot be bench-checked or self-checked.**

Pre-tensioner Seat Belt Inspection

- **Inspecting a pre-tensioner seat belt using a tester can operate (deploy) the pre-tensioner seat belt, which may cause serious injury. Do not use a tester to inspect a pre-tensioner seat belt. Always use the on-board diagnostic function to diagnose the pre-tensioner seat belt for malfunctions.**

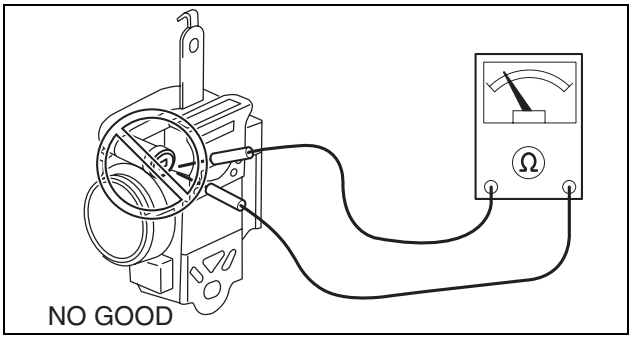

ac5wzw0000205

SERVICE PRECAUTIONS

id000000600200

Arrangement of Workshop

- Arrangement of the workshop is important for safe and efficient work.

GENERAL INFORMATION

Safety Precautions

- Protective head covering and safety shoes should always be worn. Depending upon the nature of the work, gloves, safety glasses, ear protectors, face shield, etc., should also be used.

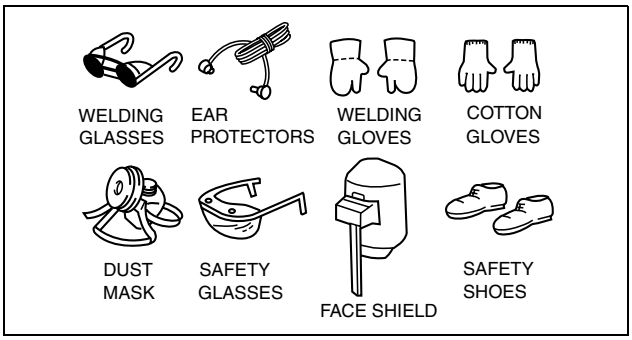

am3uub0000007

Vehicle Protection

- Use seat covers and floor covers.
- Use heat-resistant protective covers to protect glass areas and seats from heat or sparks during welding.
- Protect items such as moldings, garnishes, and ornaments with tape when welding.

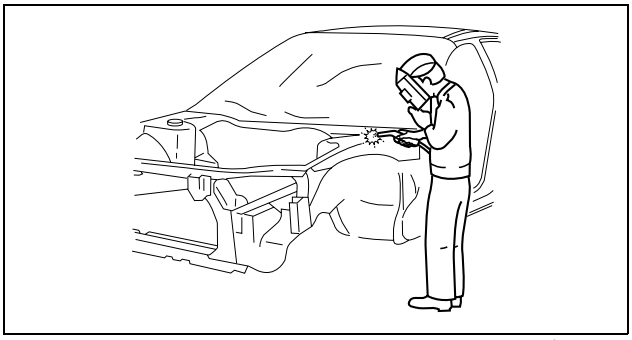

acxuub00000063

Remove Dangerous Articles

- Remove the fuel tank before using an open flame in that area. Plug connection piping to prevent fuel leakage.

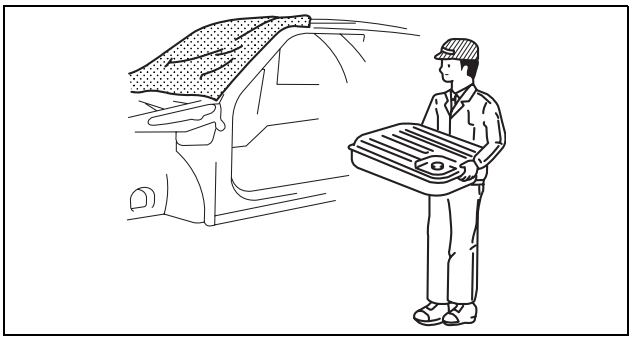

acxuub00000064

Use of Pulling Equipment

- When using pulling equipment, keep away from the pulling area and use safety wires to prevent accidents.

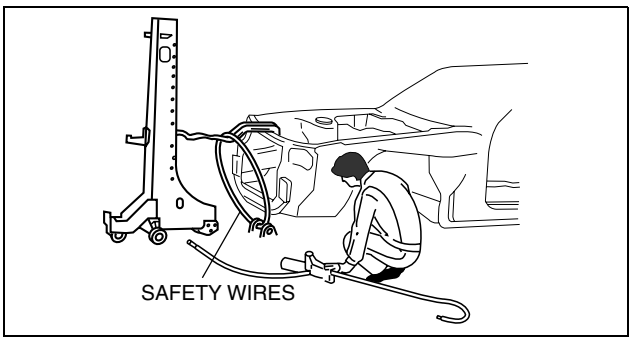

am3uub0000007

Prevent Short Circuits

- Switch the ignition to off.

GENERAL INFORMATION

- Disconnect the battery cables.

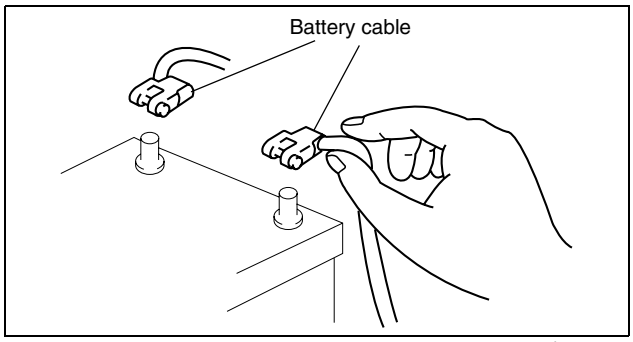

acxuub00000042

- Securely connect the welding machine ground near the welding area.

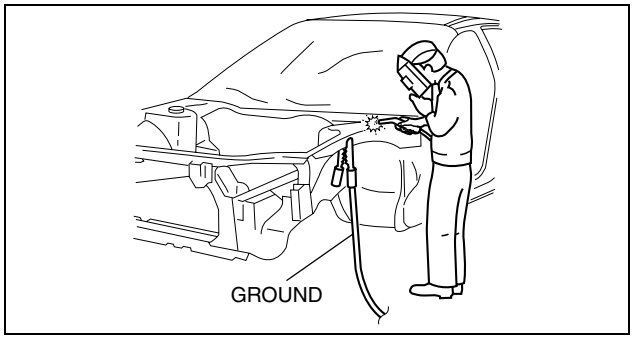

am3uub0000007

EFFICIENT REMOVAL OF BODY PANELS

id000000600300

Body Measurements

- Before removal or rough-cutting, first measure the body at and around the damaged area against the standard reference dimension specifications. If there is deformation, use frame repair equipment to make a rough correction.

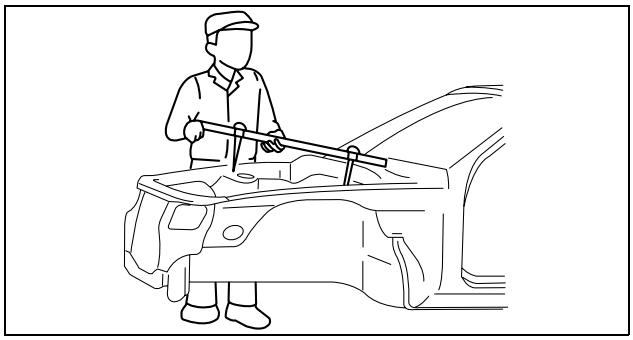

acxuub00000065

Prevention of Body Deformation

- Use a clamp or a jack for removal and reinforce at and around the rough-cutting location to prevent deforming of the body.

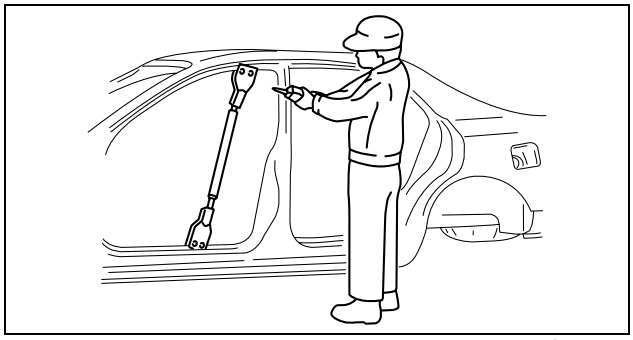

acxuub00000066

GENERAL INFORMATION

Selection of Cut-and-join Locations

- For parts where complete replacement is not feasible, careful cutting and joining operations should be followed. If the location to be cut is a flat area where there is no reinforcement, the selected cutting location should be where the welding distortion will be minimal.

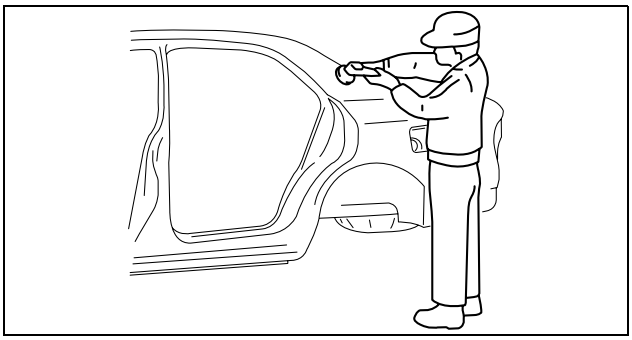

acxuub00000067

Removal of Associated Parts

- Protect moldings, garnishes, and ornaments with tape when removing associated parts.

Rough Cutting of Damaged Panel

- Verify that there are no parts (such as pipes, hoses, and wiring harness) nearby or on the opposite side of a panel which could be damaged by heat.
- For cut-and-join areas, allow for an overlap of 30—50 mm {1.2—1.9 in} and then rough-cut the damaged panel.

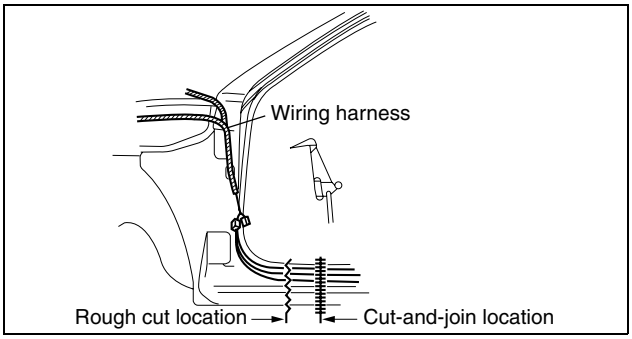

acxuub00000047

EFFICIENT INSTALLATION OF BODY PANELS

id000000600500

Checking Preweld Measurements And Watching

- Align to the standard reference dimensions, based upon the body dimensions illustration, so that new parts are installed in the correct position.

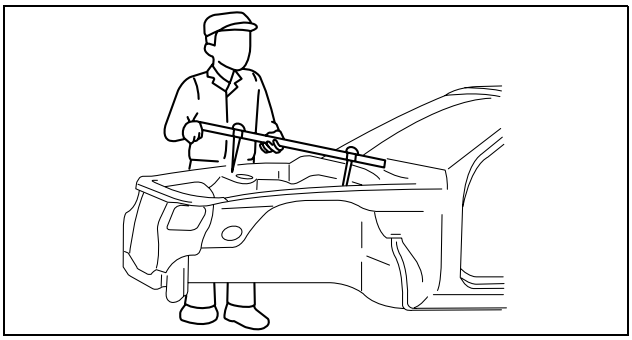

acxuub00000069

GENERAL INFORMATION

Welding Notes

- For the number of weld points, welding should be performed in accordance with the following reference standards.

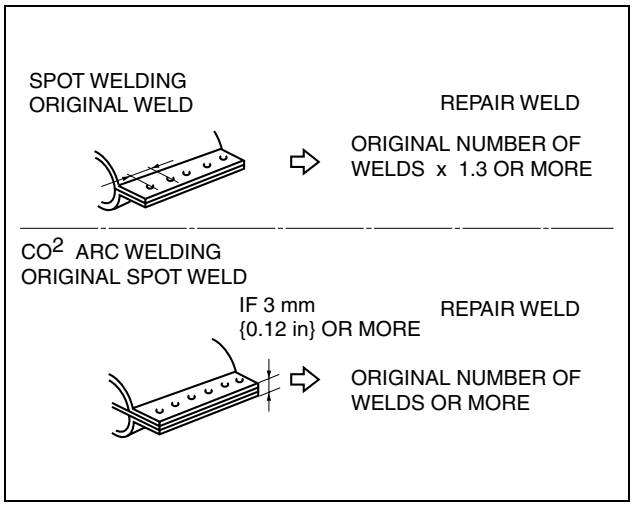

am3uub0000007

Spot Welding Notes

- The shape of the spot welder tip is D=(2×t)+3. If the upper panel thickness is different from that of the under panel, adjust to the thinner one.

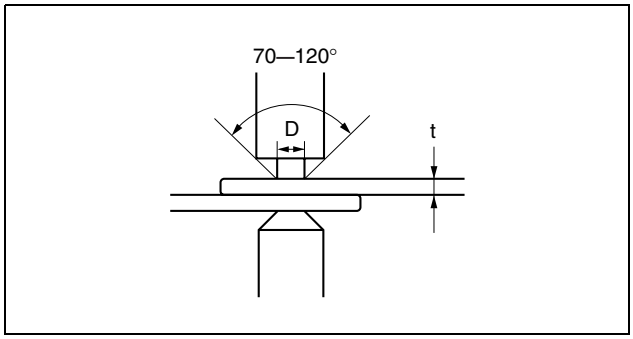

ac9uub00000041

- Because the weld strength is affected by the shape of the spot welder tip, the optimum condition of the tip should always be maintained.
- Spot welds should be made at points other than the originally welded points.

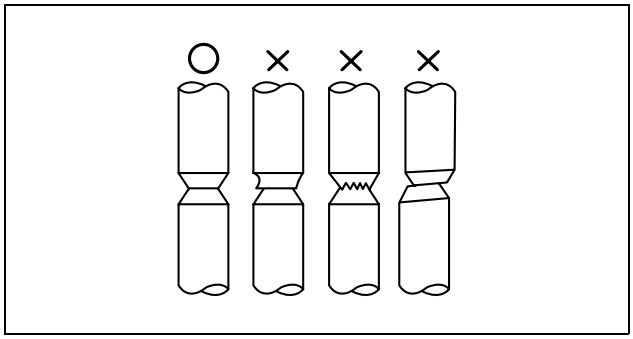

acxuub00000070

- Before spot welding, make a trial weld using the same material as the body panel to check the weld strength.

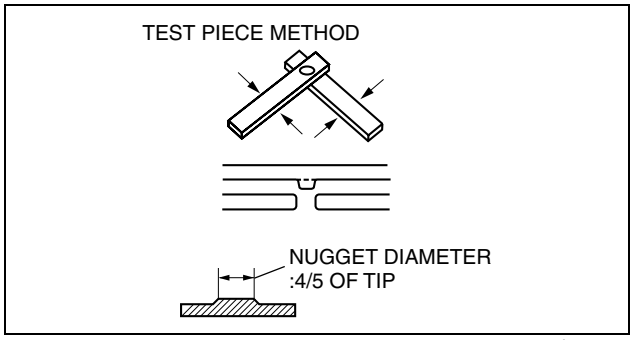

am3uub0000007

GENERAL INFORMATION

Checking Weld Strength

- Installation locations of the engine, chassis, and seat belts are designated as important safety locations for weld strength. Check weld strength by driving a chisel between the panels at every fourth or fifth weld spot, and every tenth regular weld location.

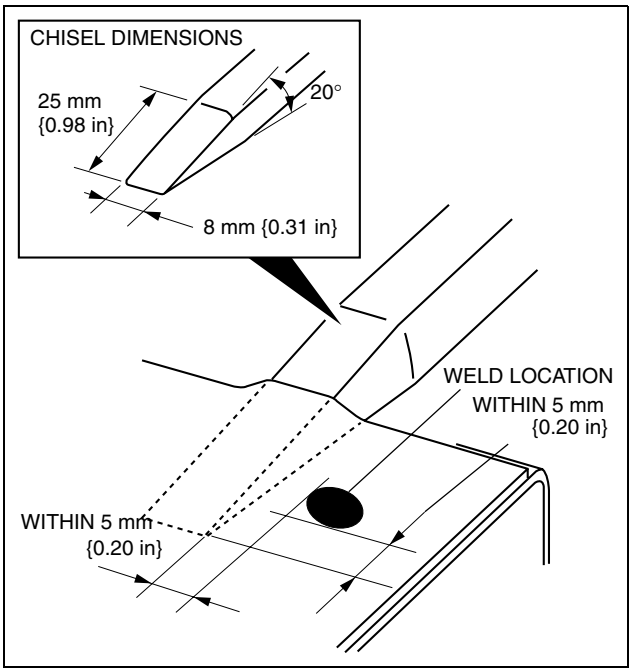

am3uub0000007

- Drive the chisel between the panels according to the number of panels as shown below.
- To determine weld strength, drive the chisel between the panel and check whether the panels come apart. If the panels come apart, make another weld near the original weld.
- Restore the shape of the checked area.

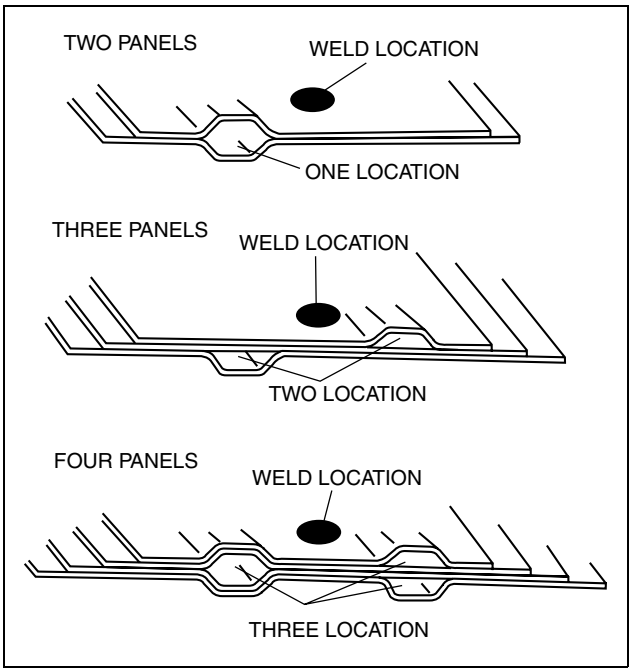

am3uub0000008

INSTALLATION PREPARATIONS

id000000600400

Rough Cutting of New Parts

- For cut-and-join areas, allow for an overlap of 30—50 mm {1.2—1.9 in} with the remaining area on the body side and then rough-cut the new parts.

GENERAL INFORMATION

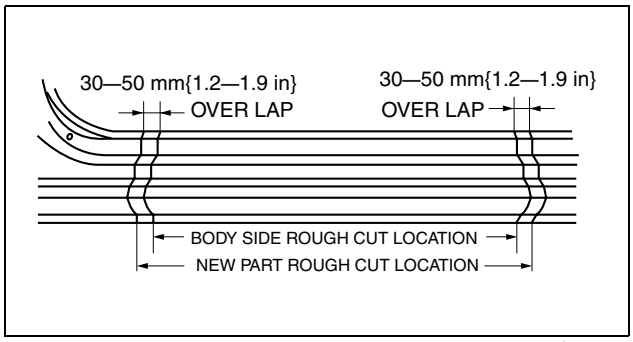

am3uub0000008

Determination of Welding Method

- If the total thickness at the area to be welded is 3 mm {0.12 in} or more, use a gas shielded-arc welder to make the plug welds.

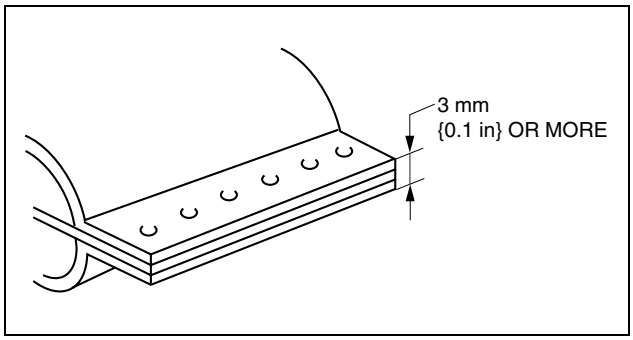

am3uub0000008

Making Holes for Arc Welding

- For places that cannot be spot welded, make a hole for arc welding using a punch or drill as follows.

(mm {in})

Panel thickness (ϕ)	Hole diameter (ϕ)
0.60—0.90 {0.024—0.035}	5.0 {0.20}
0.91—1.20 {0.036—0.047}	6.0 {0.24}
1.21—1.80 {0.0477—0.0708}	8.0 {0.31}
1.81—4.50 {0.072—0.177}	10.0 {0.394}

- Grind the shaded section indicated in the diagram below and create a hole in the part where the 3—4 plates are put together. Also, weld the plates together tightly so that gaps do not develop.

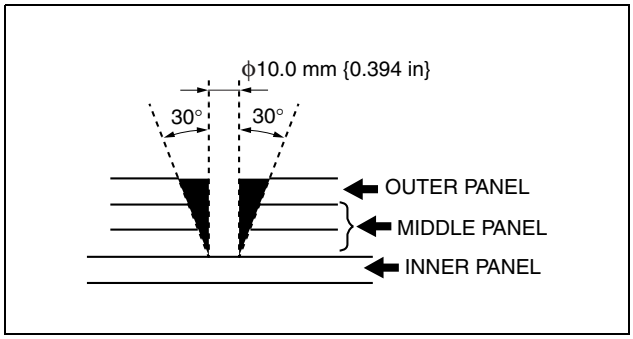

am3uub0000008

Application of Weld-through Primer

- For treatment against corrosion, remove the paint grease, and other material from the portion of new part and body to be welded, and apply weld-through primer.

GENERAL INFORMATION

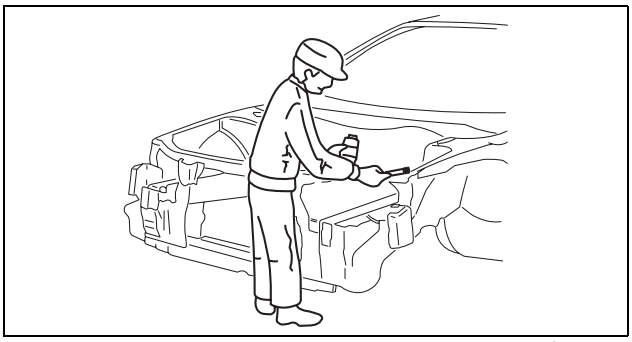

acxuub00000068

ANTICORROSION, SOUND INSULATION, AND VIBRATION INSULATION

id000000600600

Body Sealing

- Apply body sealer where necessary.
- For locations where application of body sealer is difficult after installation, apply it before installation.

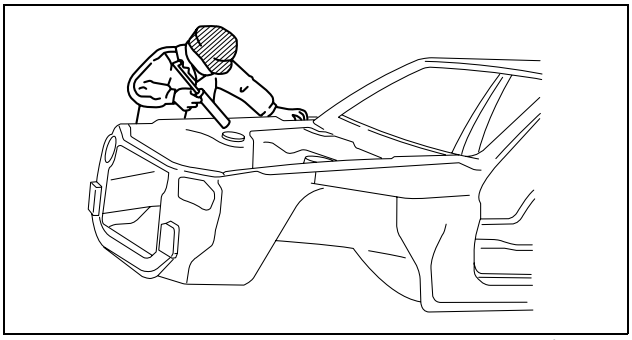

acxuub00000059

Application of Undercoating

- Apply an undercoat to the required location of the body.

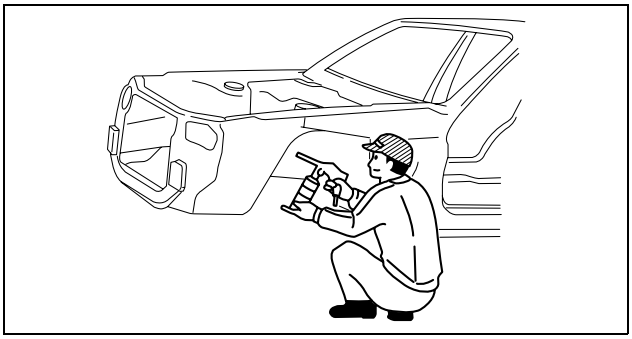

acxuub00000060

Application of Rust Inhibitor

- Apply rust inhibitor (wax, oil, etc.) to the back of the welded areas.

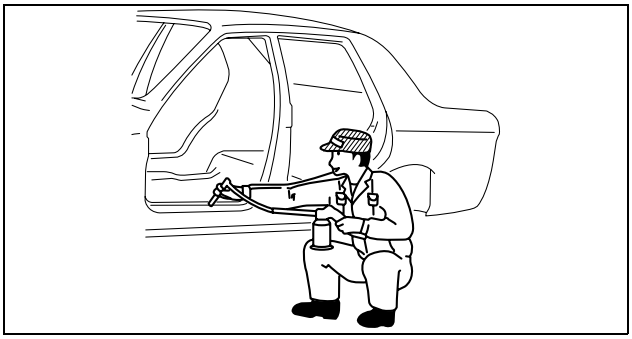

acxuub00000061

Application of Dumping Sheet

- Apply dumping sheet by heating with an infrared ray lamp.

GENERAL INFORMATION

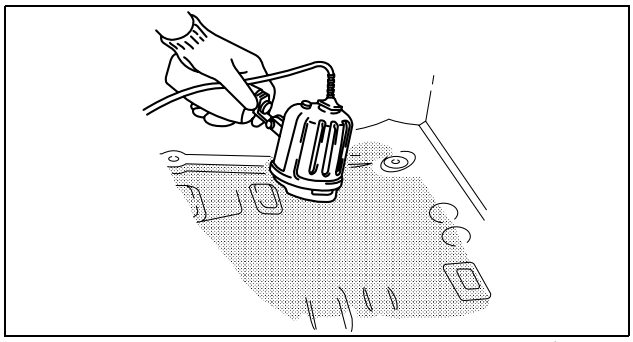

acxuub00000062

ABBREVIATION

id000000600700

Fr	Front
LH	Left Hand
RH	Right Hand
Rr	Rear

BODY COLORS

id000000788800

Color Code and Color Name

Color Code	Color Name
A4D	Arctic white CLE
16W	Black MC
27A	Velocity red MC
34K	Crystal white pearl MC
35J	Stormy blue MC
36C	Metropolitan gray MC
38P	Aluminum M
41B	Sky blue MC
41G	Zeal red MC

Verification of Primary Color Mixture for Body Color

Confirm the primary color mixture for the body color at the paint manufacturer URL.

IDENTIFICATION NUMBER LOCATIONS

id000000800800

Vehicle Identification Number (VIN)

- The VIN marking position is located on the floor on the front passenger-side.

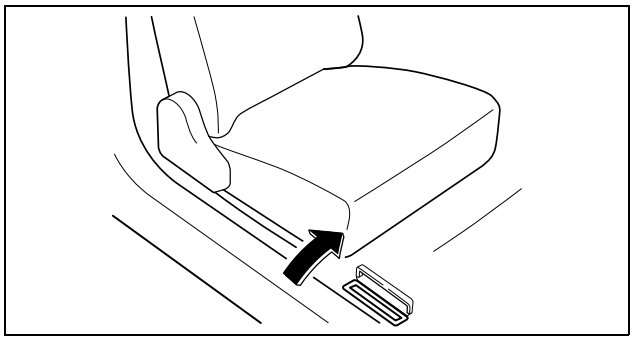

ac5wzw0000118

GENERAL INFORMATION

- If the VIN plate is adhered to the dashboard, it is located in the position shown in the figure.

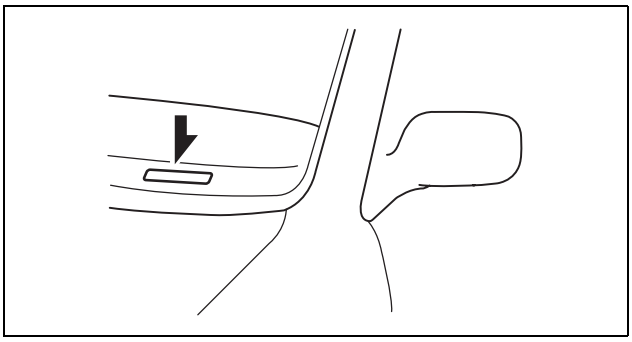

am6zzw0000387

Engine Identification Type/Number
SKYACTIV-G 2.0
SKYACTIV-D 2.2

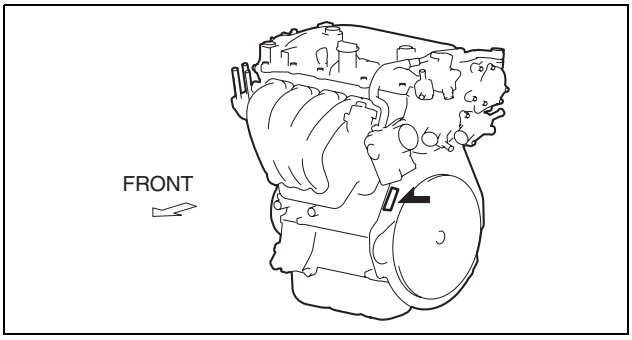

ac5wzw0000118

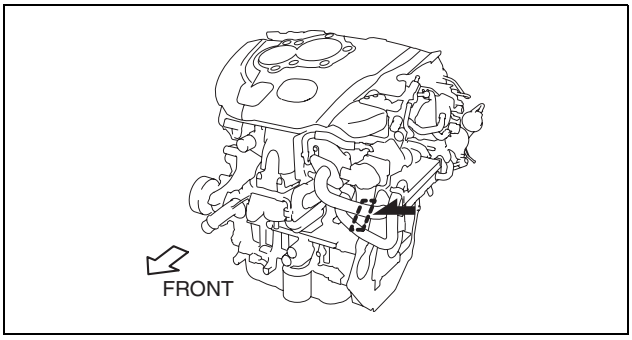

ac5wzw0000129

BODY & ACCESSORIES

09
SECTION

BODY STRUCTURE [CONSTRUCTION] 09-80A
BODY STRUCTURE [PANEL REPLACEMENT]. . . 09-80B
BODY STRUCTURE [WATER-PROOF AND RUST PREVENTIVE]. 09-80C
BODY STRUCTURE [DIMENSIONS]. 09-80D
BODY STRUCTURE [PLASTIC BODY PARTS]. . . . 09-80E
BODY STRUCTURE [CONSTRUCTION STANDARD VALUES]. 09-80F

09-80A BODY STRUCTURE [CONSTRUCTION]

BODY COMPONENTS CONSTRUCTION [CONSTRUCTION] 09-80A–2
ULTRA HIGH-TENSION STEEL [CONSTRUCTION] 09-80A–6
Characteristics of Ultra High-Tensile Steel Plates **09-80A–6**
Range of Use and Cautions for Service **09-80A–6**

BODY STRUCTURE [CONSTRUCTION]

BODY COMPONENTS CONSTRUCTION [CONSTRUCTION]

id098007739700

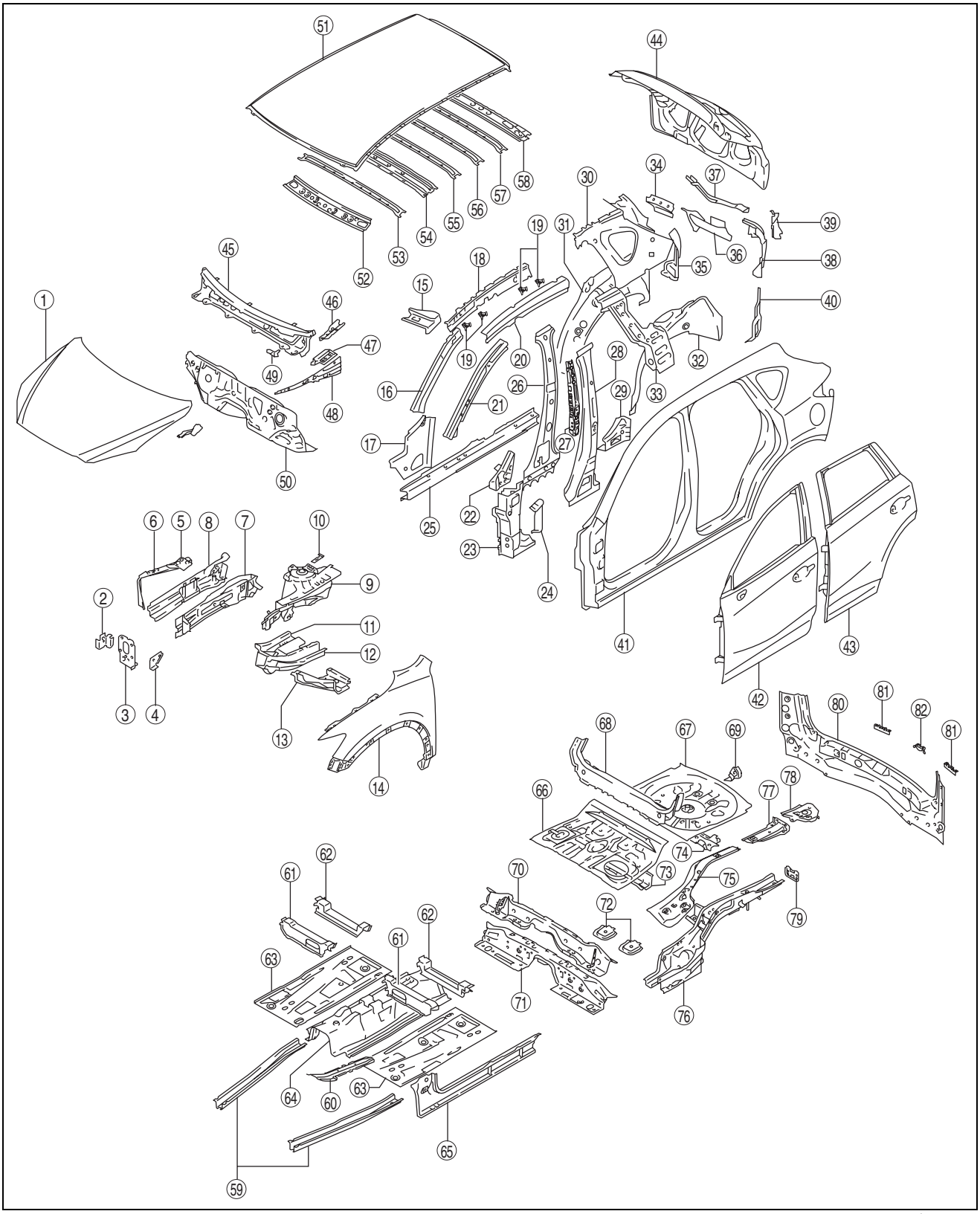

ac5wzb00000307

x:Applied

BODY STRUCTURE [CONSTRUCTION]

-:Not applied

No.	Part Name		Ultra high-tension steel	High-tension steel	Rust proof steel	Thickness (mm) {in}
1	Bonnet		-	X	X	0.65 {0.026}
2	Suspension mounting reinforcement		-	X	X	2.90 {0.114}
3	Bumper bracket		X	-	X	2.60 {0.102}
4	Outer frame reinforcement		-	X	X	2.00 {0.0787}
5	Shroud upper reinforcement		-	-	X	0.90 {0.035}
6	Shroud side member component	Apron reinforcement (lower)	-	X	X	0.80 {0.031}
		Side stay	-	-	X	1.20 {0.0472}
		Shroud side panel	-	X	X	0.90 {0.035}
7	Front side frame (outer)	Front	-	X	X	1.40 {0.0551}
		Rear	X	-	X	1.60 {0.0630}
8	Front side frame (inner)	Front	-	X	X	1.40 {0.0551}
		Rear	X	-	X	1.60 {0.0630}
9	Wheel apron component	Apron upper reinforcement	-	-	X	1.00 {0.0394}
		Apron reinforcement No.3	X	-	X	1.20 {0.0472}
		Cowl side Reinforcement inner	-	X	X	1.00 {0.0394}
		Suspension housing (lower)	-	-	X	0.80 {0.031}
10	Front fender junction		-	-	X	0.80 {0.031}
11	Side member		-	-	X	1.60 {0.0630}
12	Front frame (rear)		X	-	X	2.00 {0.0787}
13	Torque box		-	X	X	1.40 {0.0551}
14	Front fender panel		-	-	X	0.70 {0.028}
15	Front pillar upper reinforcement		-	X	-	0.70 {0.028}
16	Inner front pillar		X	-	-	1.40 {0.0551}
17	Inner hinge pillar		X	-	X	1.20 {0.0472}
18	Roof rail (inner)		X	-	-	1.20 {0.0472}
19	Nut plate		-	-	-	1.20 {0.0472}
20	Roof rail reinforcement		X	-	-	1.20 {0.0472}
21	Front pillar reinforcement		X	-	-	1.60 {0.0630}

BODY STRUCTURE [CONSTRUCTION]

No.	Part Name		Ultra high-tension steel	High-tension steel	Rust proof steel	Thickness (mm) {in}
22	Front pillar reinforcement		X	-	-	1.60 {0.0630}
23	Hinge reinforcement	Upper	X	-	-	1.20 {0.0472}
		Lower	X	-	-	1.60 {0.0630}
24	Upper cowl side reinforcement		-	X	X	1.60 {0.0630}
25	Side sill reinforcement		X	-	X	1.40 {0.0551}
26	Inner center pillar		-	X	X	1.20 {0.0472}
27	Center pillar inner reinforcement		X	-	-	2.30 {0.0906}
28	Center pillar reinforcement	Upper	X	-	-	2.00 {0.0787}
		Lower	X	-	-	2.00 {0.0787}
29	Side sill reinforcement rear		X	-	X	1.80 {0.0709}
30	Inner rear pillar		-	-	X	0.70 {0.028}
31	Wheel housing (outer)		-	-	X	0.65 {0.026}
32	Wheel housing (inner)		-	-	X	0.70 {0.028}
33	Suspension housing reinforcement	Upper	X	-	-	1.20 {0.0472}
		Center	-	-	-	0.65 {0.026}
		Lower	-	-	-	1.80 {0.0709}
34	Rear side panel		-	-	X	0.65 {0.026}
35	Corner junction		-	-	-	1.00 {0.0394}
36	D-pillar reinforcement (upper)		-	-	-	0.70 {0.028}
37	Rear pillar outer		-	-	X	0.70 {0.028}
38	D-pillar reinforcement (lower)		-	-	-	0.70 {0.028}
39	Corner plate		-	-	X	0.70 {0.028}
40	Rear fender lower panel		-	-	X	0.70 {0.028}
41	Cabin side outer frame		-	-	X	0.70 {0.028}
42	Front door	Outer panel	-	X	X	0.70 {0.028}
		Inner panel	-	-	X	0.65 {0.026}
43	Rear door	Outer panel	-	X	X	0.70 {0.028}
		Inner panel	-	-	X	0.65 {0.026}
44	Liftgate	Outer panel	-	-	X	0.70 {0.028}
		Inner panel	-	-	X	0.65 {0.026}

BODY STRUCTURE [CONSTRUCTION]

No.	Part Name		Ultra high-tension steel	High-tension steel	Rust proof steel	Thickness (mm) {in}
45	Dash and cowl component	Cowl panel	-	-	X	0.65 {0.026}
		Dash upper panel	-	-	X	0.90 {0.035}
46	Wiper bracket		-	X	X	1.40 {0.0551}
47	Cowl upper plate		-	X	X	1.40 {0.0551}
48	Cowl side reinforcement lower	Front	-	X	X	0.80 {0.031}
		Rear	X	-	X	1.20 {0.0472}
49	Wiper bracket		-	-	X	1.20 {0.0472}
50	Dash lower component	Dash lower panel	-	-	X	0.80 {0.031}
		Tunnel junction No.1	-	-	X	0.90 {0.035}
51	Roof panel		-	-	-	0.75 {0.030}
52	Front header		-	X	-	0.65 {0.026}
53	Roof reinforcement No.1		-	-	-	0.55 {0.022}
54	Roof reinforcement No.2		X	-	-	1.00 {0.0394}
55	Roof reinforcement No.3		-	-	-	0.55 {0.022}
56	Roof reinforcement No.4		-	-	-	0.55 {0.022}
57	Roof reinforcement No.5		-	-	-	0.55 {0.022}
58	Rear header	Upper	-	-	-	0.65 {0.026}
		Lower	-	-	X	0.70 {0.028}
59	Front B frame	Front	X	-	X	1.40 {0.0551}
		Rear	X	-	X	1.00 {0.0394}
60	Floor reinforcement		X	-	-	1.20 {0.0472}
61	Crossmember No.2		X	-	-	1.00 {0.0394}
62	Crossmember No.2.5		X	-	-	1.20 {0.0472}
63	Front floor side panel		-	-	X	0.60 {0.024}
64	Tunnel reinforcement		X	-	X	0.90 {0.035}
65	Side sill (inner)	Front	X	-	X	1.40 {0.0551}
		Rear	X	-	X	1.60 {0.0630}
66	Center floor panel		-	-	X	0.60 {0.024}
67	Trunk floor panel		-	-	X	0.60 {0.024}
68	Rear floor front reinforcement		-	X	-	0.90 {0.035}

BODY STRUCTURE [CONSTRUCTION]

No.	Part Name		Ultra high-tension steel	High-tension steel	Rust proof steel	Thickness (mm) {in}
69	Brace reinforcement		-	-	-	1.60 {0.0630}
70	Crossmember No.3 (upper)		-	-	X	0.60 {0.024}
71	Crossmember No.3 (lower)		X	-	X	1.00 {0.0394}
72	Anchor reinforcement		-	X	X	1.20 {0.0472}
73	Crossmember No.4 (front)		-	X	X	1.00 {0.0394}
74	Crossmember No.4 (rear)	Center	-	-	X	0.70 {0.028}
		Side	-	-	X	1.20 {0.0472}
75	Rear frame reinforcement		X	-	X	0.90 {0.035}
76	Rear side frame	Front	X	-	X	1.80 {0.0709}
		Center	X	-	X	1.80 {0.0709}
		Rear	X	-	X	1.60 {0.0630}
77	Floor side panel No.1	Front	X	-	X	1.40 {0.0551}
		Rear	-	X	X	2.00 {0.0787}
78	Floor side panel No.2		-	-	X	0.70 {0.028}
79	Rear bumper bracket		X	-	X	2.00 {0.0787}
80	Rear end panel component	Rear end panel	-	-	X	1.00 {0.0394}
		Rear end member	-	-	-	0.70 {0.028}
81	Rear bumper reinforcement No.1		-	-	X	1.00 {0.0394}
82	Rear bumper reinforcement No.2		-	-	X	1.00 {0.0394}

ULTRA HIGH-TENSION STEEL [CONSTRUCTION]

id098007745600

Characteristics of Ultra High-Tensile Steel Plates

- Ultra high-tensile steel plates have enhanced tensile strength compared to previous high-tensile steel plates.
- Because the strength is maintained even though the plates are thin-walled, the ultra high-tensile steel plates are used for the frames and the main frame parts which form the cabin, reducing the weight of the vehicle.
- Enhanced shock absorption has improved the safety.

Range of Use and Cautions for Service

- Because the ultra high-tensile steel is hard and it may be difficult to reform, when extracting the damaged part using a frame repair machine, perform the work verifying that other parts are not affected.
- When drilling welded parts, use a well-ground drill bit.
- After welding, inspect the weld strength. If adhesion is poor, perform arc welding (plug welding).

BODY STRUCTURE [CONSTRUCTION]

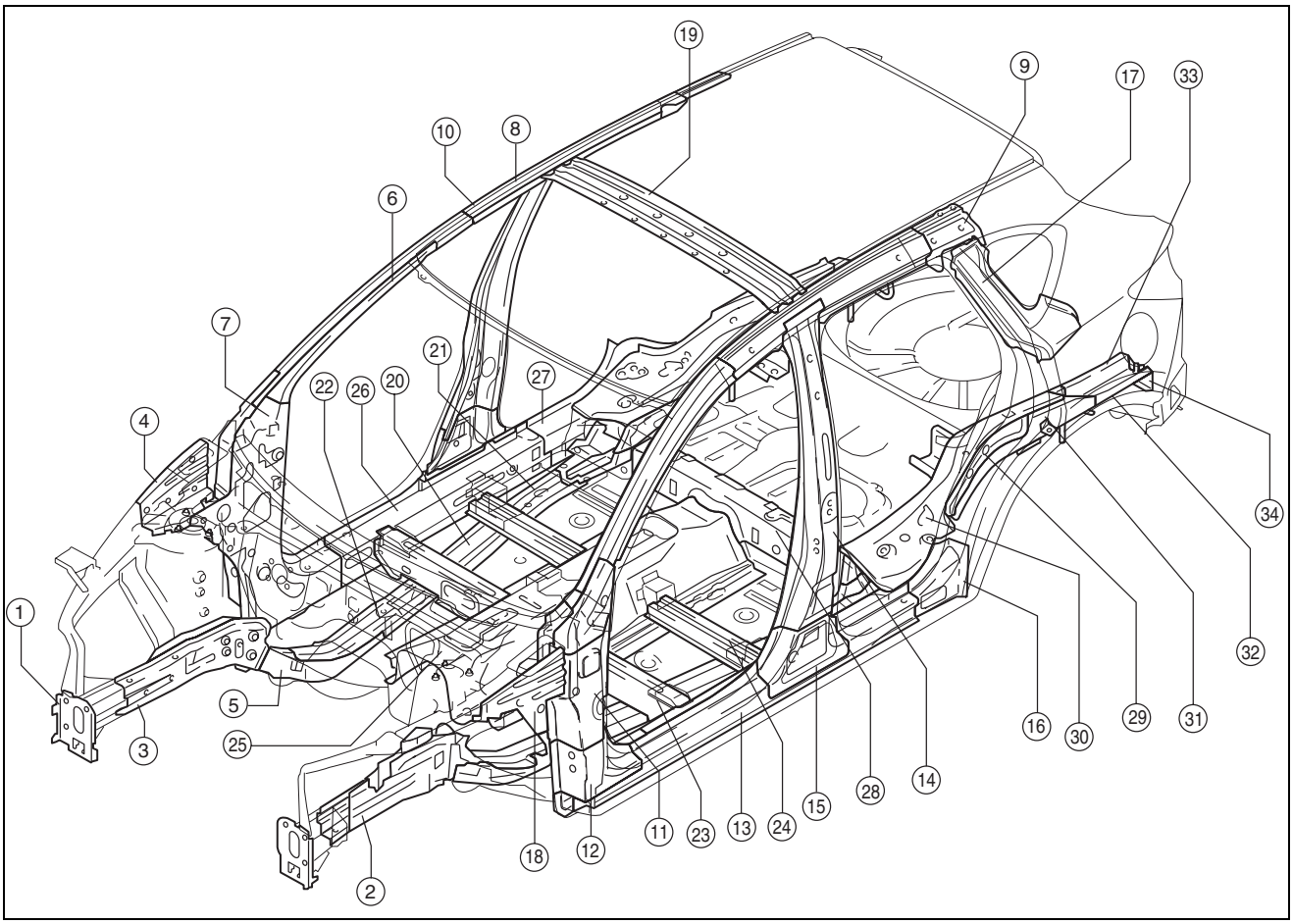

ac5wzb00000190

NO.	Part Name	Strength (MPa)
1	Bumper bracket	590
2	Front side frame (outer, rear)	590
3	Front side frame (inner, rear)	590
4	Apron reinforcement No.3	590
5	Front frame (rear)	590
6	Inner front pillar	780
7	Inner hinge pillar	590
8	Roof rail (inner)	590
9	Roof rail reinforcement	780
10	Front pillar reinforcement	590
11	Hinge reinforcement (upper)	590
12	Hinge reinforcement lower	590
13	Side sill reinforcement	780
14	Center pillar reinforcement (upper)	980
15	Center pillar reinforcement (lower)	590
16	Side sill reinforcement (rear)	590

17	Suspension housing reinforcement (upper)	780
18	Lower cowl side reinforcement (rear)	590
19	Roof reinforcement No.2	590
20	Front B frame front	590
21	Front B frame rear	590
22	Floor reinforcement	780
23	Crossmember No.2	590
24	Crossmember No.2.5	780
25	Tunnel reinforcement	590
26	Side sill (inner, front)	590
27	Side sill (inner, rear)	780
28	Crossmember No.3 (lower)	590
29	Rear frame reinforcement	590
30	Rear side frame (front)	590
31	Rear side frame (center)	590
32	Rear side frame (rear)	590
33	Floor side panel No.1	590
34	Rear bumper bracket	590

PAGE 1 OF 2

09-80B BODY STRUCTURE [PANEL REPLACEMENT]

BUMPER BRACKET REMOVAL [PANEL REPLACEMENT] 09-80B–3
Symbol Mark 09-80B–3
Removal Procedure 09-80B–3
BUMPER BRACKET INSTALLATION [PANEL REPLACEMENT] 09-80B–4
Symbol Mark 09-80B–4
Installation Procedure 09-80B–4
SHROUD SIDE MEMBER REMOVAL [PANEL REPLACEMENT] 09-80B–5
Symbol Mark 09-80B–5
Removal Procedure 09-80B–5
SHROUD SIDE MEMBER INSTALLATION [PANEL REPLACEMENT] 09-80B–6
Symbol Mark 09-80B–6
Installation Procedure 09-80B–6
SHROUD UPPER REINFORCEMENT REMOVAL [PANEL REPLACEMENT] 09-80B–7
Symbol Mark 09-80B–7
Removal Procedure 09-80B–7
SHROUD UPPER REINFORCEMENT INSTALLATION [PANEL REPLACEMENT] 09-80B–8
Symbol Mark 09-80B–8
Installation Procedure 09-80B–8
WIPER BRACKET REMOVAL [PANEL REPLACEMENT] 09-80B–9
Symbol Mark 09-80B–9
Removal Procedure 09-80B–9
WIPER BRACKET REMOVAL [PANEL REPLACEMENT] 09-80B–11
Symbol Mark 09-80B–11
Installation Procedure 09-80B–11
UPPER COWL SIDE REINFORCEMENT REMOVAL [PANEL REPLACEMENT] 09-80B–13
Symbol Mark 09-80B–13
Removal Procedure 09-80B–13
UPPER COWL SIDE REINFORCEMENT INSTALLATION [PANEL REPLACEMENT] 09-80B–13
Symbol Mark 09-80B–13
Installation Procedure 09-80B–13
LOWER COWL SIDE REINFORCEMENT REMOVAL [PANEL REPLACEMENT] 09-80B–14
Symbol Mark 09-80B–14
Removal Procedure 09-80B–14
LOWER COWL SIDE REINFORCEMENT INSTALLATION [PANEL REPLACEMENT] 09-80B–15
Symbol Mark 09-80B–15
Installation Procedure 09-80B–15
WHEEL APRON COMPONENT REMOVAL [PANEL REPLACEMENT] 09-80B–15
Symbol Mark 09-80B–15
Removal Procedure 09-80B–15
WHEEL APRON COMPONENT INSTALLATION [PANEL REPLACEMENT] 09-80B–17
Symbol Mark 09-80B–17
Installation Procedure 09-80B–17
FRONT FENDER JUNCTION REMOVAL [PANEL REPLACEMENT] 09-80B–19
Symbol Mark 09-80B–19
Removal Procedure 09-80B–19
FRONT FENDER JUNCTION INSTALLATION [PANEL REPLACEMENT] 09-80B–19
Symbol Mark 09-80B–19
Installation Procedure 09-80B–19
FRONT SIDE FRAME REMOVAL [PANEL REPLACEMENT] 09-80B–20
Symbol Mark 09-80B–20
Removal Procedure 09-80B–20
FRONT SIDE FRAME INSTALLATION [PANEL REPLACEMENT] 09-80B–21
Symbol Mark 09-80B–21
Installation Procedure 09-80B–21
FRONT SIDE FRAME (PARTIAL CUTTING) REMOVAL [PANEL REPLACEMENT] 09-80B–22
Symbol Mark 09-80B–22
Removal Procedure 09-80B–22
FRONT SIDE FRAME (PARTIAL CUTTING) INSTALLATION [PANEL REPLACEMENT] 09-80B–24
Symbol Mark 09-80B–24
Installation Procedure 09-80B–24
COWL UPPER PLATE REMOVAL [PANEL REPLACEMENT] 09-80B–27
Symbol Mark 09-80B–27
Removal Procedure 09-80B–27
COWL UPPER PLATE INSTALLATION [PANEL REPLACEMENT] 09-80B–29
Symbol Mark 09-80B–29
Installation Procedure 09-80B–29
TORQUE BOX REMOVAL [PANEL REPLACEMENT] 09-80B–30
Symbol Mark 09-80B–30
Removal Procedure 09-80B–31
TORQUE BOX INSTALLATION [PANEL REPLACEMENT] 09-80B–32
Symbol Mark 09-80B–32
Installation Procedure 09-80B–32
FRONT FRAME (REAR) REMOVAL [PANEL REPLACEMENT] 09-80B–34
Symbol Mark 09-80B–34
Removal Procedure 09-80B–34
FRONT FRAME (REAR) INSTALLATION [PANEL REPLACEMENT] 09-80B–35
Symbol Mark 09-80B–35
Installation Procedure 09-80B–35
SIDE MEMBER REMOVAL [PANEL REPLACEMENT] 09-80B–36
Symbol Mark 09-80B–36
Removal Procedure 09-80B–36
SIDE MEMBER INSTALLATION [PANEL REPLACEMENT] 09-80B–36
Symbol Mark 09-80B–36
Installation Procedure 09-80B–36
FRONT PILLAR REMOVAL [PANEL REPLACEMENT] 09-80B–37
Symbol Mark 09-80B–37
Removal Procedure 09-80B–37

BODY STRUCTURE [PANEL REPLACEMENT]

FRONT PILLAR INSTALLATION [PANEL REPLACEMENT] 09-80B–45
Symbol Mark 09-80B–45
Installation Procedure 09-80B–45
CENTER PILLAR REMOVAL [PANEL REPLACEMENT] 09-80B–50
Symbol Mark 09-80B–50
Removal Procedure 09-80B–50
CENTER PILLAR INSTALLATION [PANEL REPLACEMENT] 09-80B–54
Symbol Mark 09-80B–54
Installation Procedure 09-80B–54
SIDE SILL PANEL REMOVAL [PANEL REPLACEMENT] 09-80B–57
Symbol Mark 09-80B–57
Removal Procedure 09-80B–57
SIDE SILL PANEL INSTALLATION [PANEL REPLACEMENT] 09-80B–60
Symbol Mark 09-80B–60
Installation Procedure 09-80B–60
REAR FENDER PANEL REMOVAL [PANEL REPLACEMENT] 09-80B–63
Symbol Mark 09-80B–63
Removal Procedure 09-80B–63
REAR FENDER PANEL INSTALLATION [PANEL REPLACEMENT] 09-80B–66
Symbol Mark 09-80B–66
Installation Procedure 09-80B–66
REAR FENDER LOWER PANEL REMOVAL [PANEL REPLACEMENT] 09-80B–69
Symbol Mark 09-80B–69
Removal Procedure 09-80B–69
REAR FENDER LOWER PANEL INSTALLATION [PANEL REPLACEMENT] 09-80B–70
Symbol Mark 09-80B–70
Installation Procedure 09-80B–70
CORNER PLATE REMOVAL [PANEL REPLACEMENT] 09-80B–71
Symbol Mark 09-80B–71
Removal Procedure 09-80B–71
CORNER PLATE INSTALLATION [PANEL REPLACEMENT] 09-80B–72
Symbol Mark 09-80B–72
Installation Procedure 09-80B–72
CORNER JUNCTION REMOVAL [PANEL REPLACEMENT] 09-80B–72
Symbol Mark 09-80B–72
Removal Procedure 09-80B–72
CORNER JUNCTION INSTALLATION [PANEL REPLACEMENT] 09-80B–73
Symbol Mark 09-80B–73
Installation Procedure 09-80B–73
REAR END PANEL REMOVAL [PANEL REPLACEMENT] 09-80B–74
Symbol Mark 09-80B–74
Removal Procedure 09-80B–74
REAR END PANEL INSTALLATION [PANEL REPLACEMENT] 09-80B–75
Symbol Mark 09-80B–75
Installation Procedure 09-80B–75
REAR PILLAR (OUTER) REMOVAL [PANEL REPLACEMENT] 09-80B–76
Symbol Mark 09-80B–76
Removal Procedure 09-80B–76
REAR PILLAR (OUTER) INSTALLATION [PANEL REPLACEMENT] 09-80B–77
Symbol Mark 09-80B–77
Installation Procedure 09-80B–77
D-PILLAR REINFORCEMENT (LOWER) REMOVAL [PANEL REPLACEMENT] 09-80B–78
Symbol Mark 09-80B–78
Removal Procedure 09-80B–78
D-PILLAR REINFORCEMENT (LOWER) INSTALLATION [PANEL REPLACEMENT] 09-80B–79
Symbol Mark 09-80B–79
Installation Procedure 09-80B–79
REAR SIDE PANEL REMOVAL [PANEL REPLACEMENT] 09-80B–80
Symbol Mark 09-80B–80
Removal Procedure 09-80B–80
REAR SIDE PANEL INSTALLATION [PANEL REPLACEMENT] 09-80B–81
Symbol Mark 09-80B–81
Installation Procedure 09-80B–81
FLOOR SIDE PANEL REMOVAL [PANEL REPLACEMENT] 09-80B–82
Symbol Mark 09-80B–82
Removal Procedure 09-80B–82
FLOOR SIDE PANEL INSTALLATION [PANEL REPLACEMENT] 09-80B–84
Symbol Mark 09-80B–84
Installation Procedure 09-80B–84
TRUNK FLOOR PANEL REMOVAL [PANEL REPLACEMENT] 09-80B–86
Symbol Mark 09-80B–86
Removal Procedure 09-80B–86
TRUNK FLOOR PANEL INSTALLATION [PANEL REPLACEMENT] 09-80B–87
Symbol Mark 09-80B–87
Installation Procedure 09-80B–87
REAR SIDE FRAME REMOVAL [PANEL REPLACEMENT] 09-80B–89
Symbol Mark 09-80B–89
Removal Procedure 09-80B–89
REAR SIDE FRAME INSTALLATION [PANEL REPLACEMENT] 09-80B–91
Symbol Mark 09-80B–91
Installation Procedure 09-80B–91
ROOF PANEL REMOVAL [PANEL REPLACEMENT] 09-80B–94
Symbol Mark 09-80B–94
Removal Procedure 09-80B–94
ROOF PANEL INSTALLATION [PANEL REPLACEMENT] 09-80B–95
Symbol Mark 09-80B–95
Installation Procedure 09-80B–95

BODY STRUCTURE [PANEL REPLACEMENT]

BUMPER BRACKET REMOVAL [PANEL REPLACEMENT]

id098008999500

Symbol Mark

SYMBOL MARK	MEANING
●	SPOT WELDING
	CONTINUOUS WELDING
	ROUGH CUT LOCATION

ac5wzb00000012

Removal Procedure

1. Rough cut area locations indicated by (A).

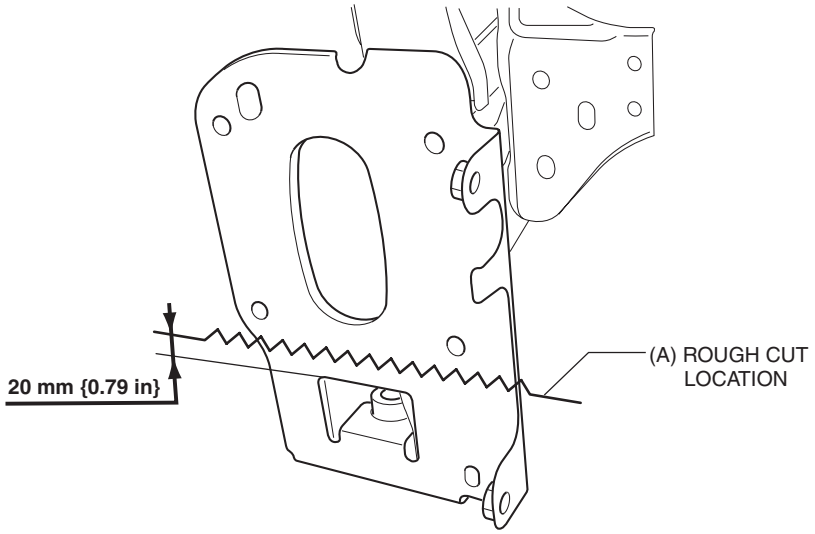

ac5wzb00000244

2. Grind the 6 locations indicated by (B) shown in the figure.

Caution

- **When grinding 6 locations indicated by (B) shown in the figure and the front side frame is damaged, there is a possibility that attachment of a bracket may become difficulty. When grinding 6 locations indicated by (B) shown in the figure, the amount removed will affect the quality of the installation.**

3. Grind the 2 locations indicated by (C) shown in the figure.
4. Drill the 2 locations indicated by (D) shown in the figure, then remove the half portion above the bumper bracket.

BODY STRUCTURE [PANEL REPLACEMENT]

5. Drill the 3 locations indicated by (E) shown in the figure.

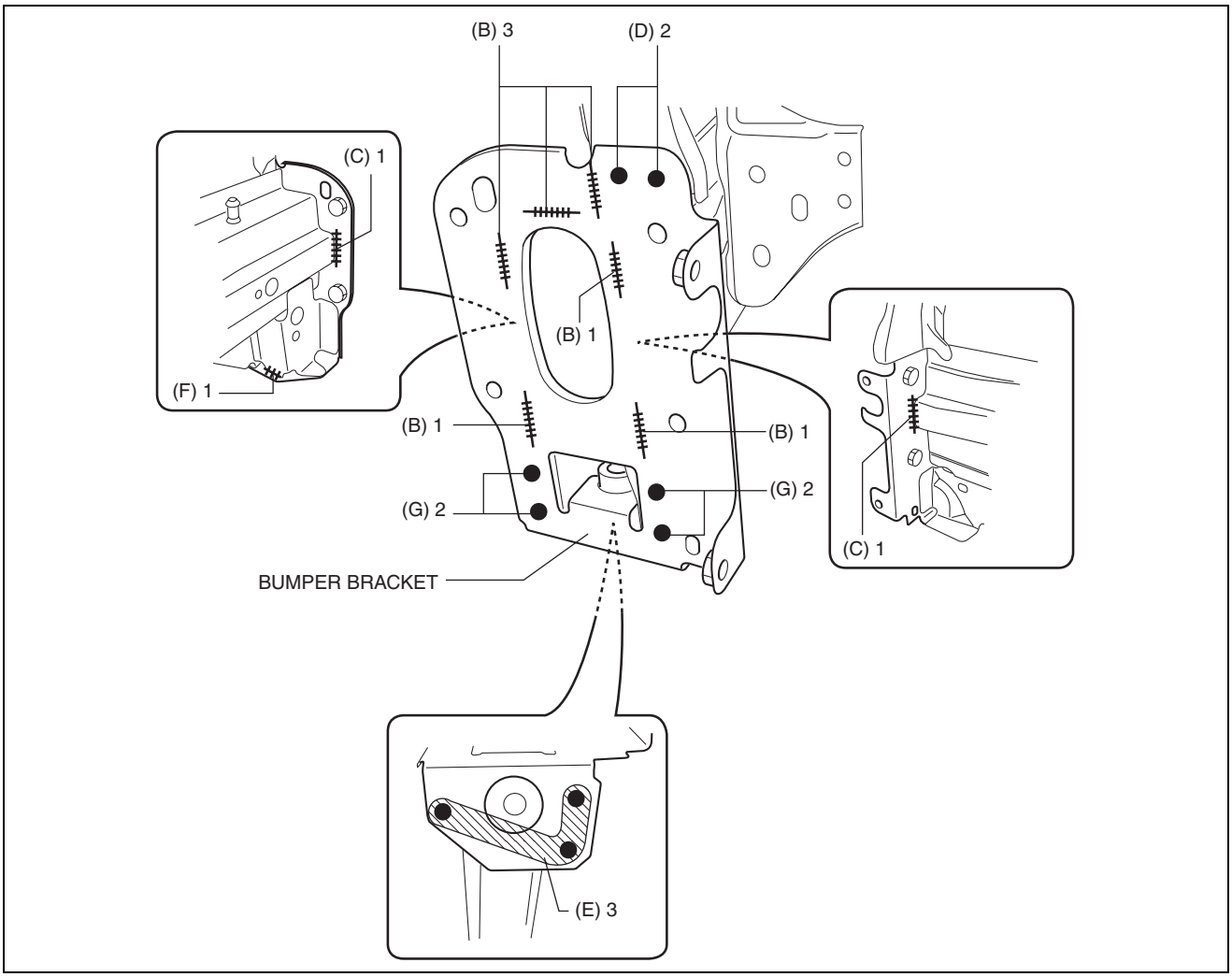

ac5wzb00000014

6. Grind the 1 location indicated by (F) shown in the figure.
7. Drill the 4 locations indicated by (G) shown in the figure.
8. Remove the half portion below the bumper bracket.

BUMPER BRACKET INSTALLATION [PANEL REPLACEMENT]

id098008999600

Symbol Mark

SYMBOL MARK	MEANING
■	PLUG WELDING (ARC WELDING)
⊢⊢⊢⊢⊢⊢⊢⊢⊢⊢⊢⊢⊢⊢⊢⊢⊢⊢⊢⊢⊢⊢⊢⊢⊢⊢	CONTINUOUS ARC WELDING (CUT-AND-JOIN LOCATION)

ac5wzb00000206

Installation Procedure

1. When installing new parts, measure and adjust the body as necessary to conform with standard dimensions.
2. Drill holes for the plug welding 6 locations indicated by (A) and 3 locations indicated by (C) shown in the figure, before installing the new parts.
3. After temporarily installing new parts, make sure the related parts fit properly.

BODY STRUCTURE [PANEL REPLACEMENT]

4. Plug weld the 6 locations indicated by (A) shown in the figure.

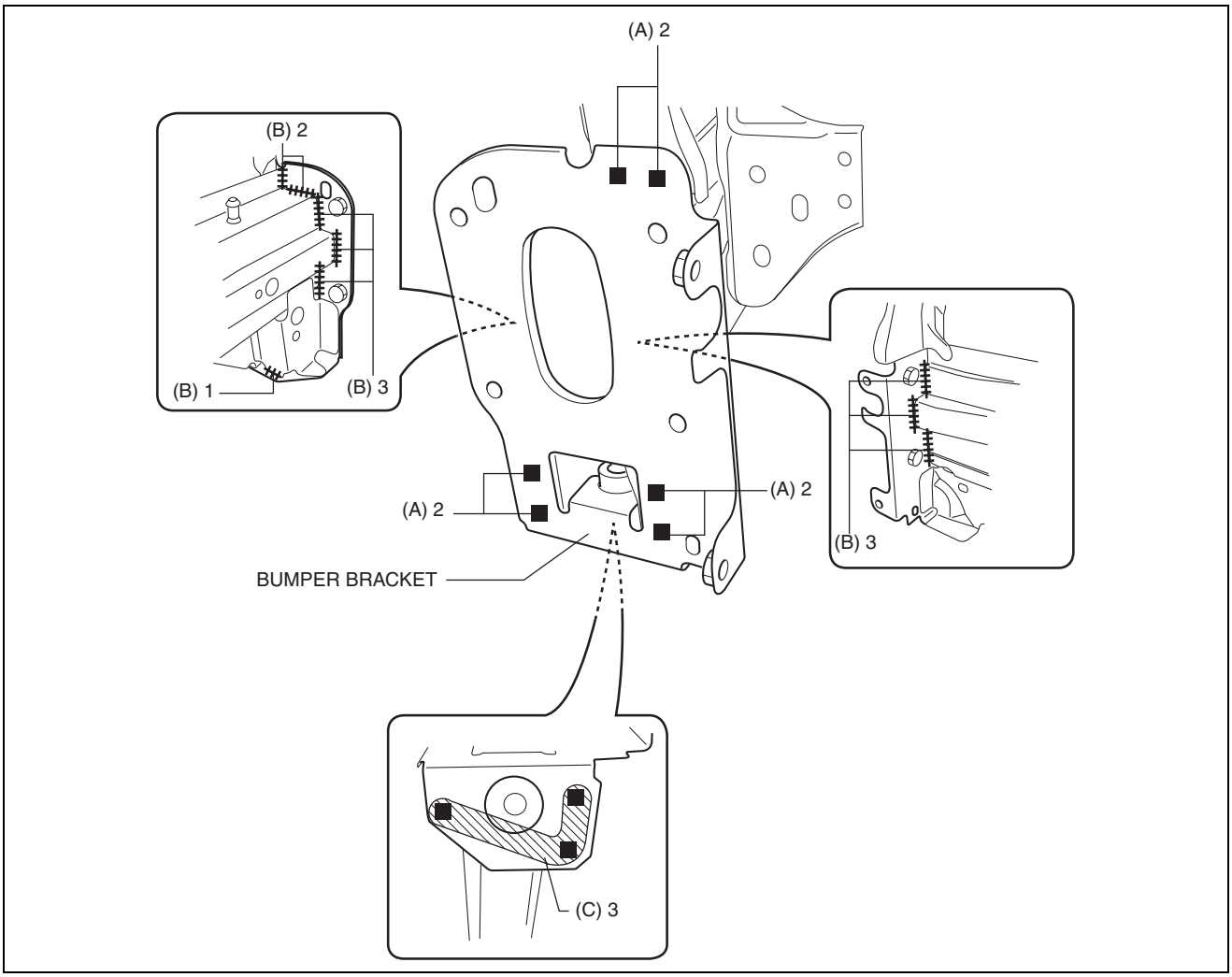

ac5wzb00000245

5. Continuos weld the 9 locations indicated by (B) shown in the figure from the front wheel housing and engine room.

Note
- A flange part is fixed by a hand vise, and where a welded area is press-fitted, welding is performed so that a clearance does not open in the part welded.

6. Plug weld the 3 locations indicated by (C) shown in the figure, then install the bumper bracket.

SHROUD SIDE MEMBER REMOVAL [PANEL REPLACEMENT]

id098008919000

Symbol Mark

SYMBOL MARK	MEANING
●	SPOT WELDING

ac5wzb00000017

Removal Procedure

1. Drill the 3 locations indicated by (A) shown in the figure.
2. Drill the 8 locations indicated by (B) and 2 locations indicated by (C) shown in the figure.

Note
- When drilling the 3 locations indicated by (A) and 2 locations indicated by (C) shown in the figure, do not drill a hole all the way through or there could be a problem when installing the new part.

BODY STRUCTURE [PANEL REPLACEMENT]

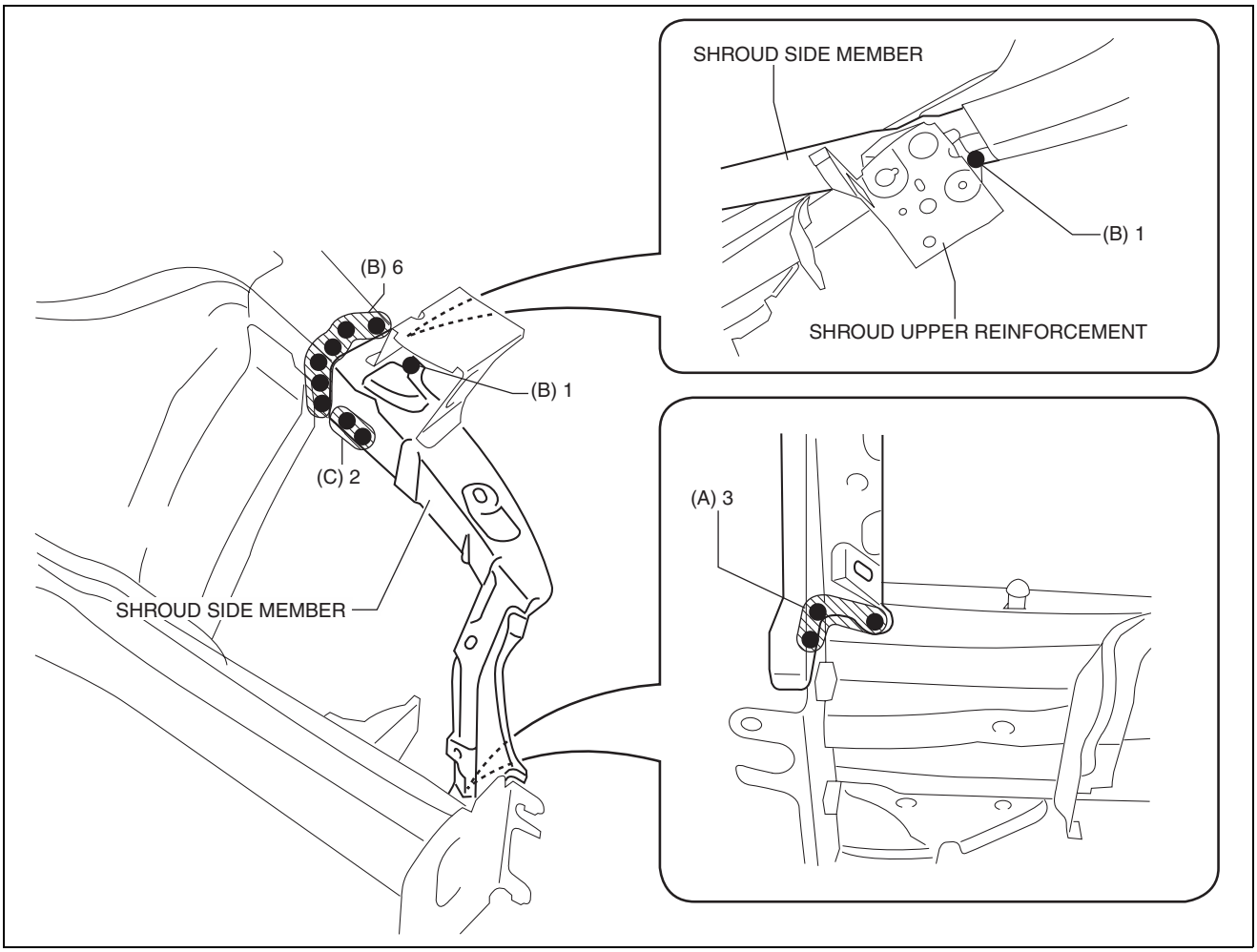

ac5wzb00000018

3. Remove the shroud side member.

SHROUD SIDE MEMBER INSTALLATION [PANEL REPLACEMENT]

id098008919100

Symbol Mark

SYMBOL MARK	MEANING
■	PLUG WELDING (ARC WELDING)

ac5wzb00000205

Installation Procedure

1. When installing new parts, measure and adjust the body as necessary to conform with standard dimensions.
2. Drill holes for the plug welding before installing the new parts.
3. After temporarily installing new parts, make sure the related parts fit properly.
4. Plug weld the 8 locations indicated by (A) and 2 locations indicated by (B) shown in the figure.

BODY STRUCTURE [PANEL REPLACEMENT]

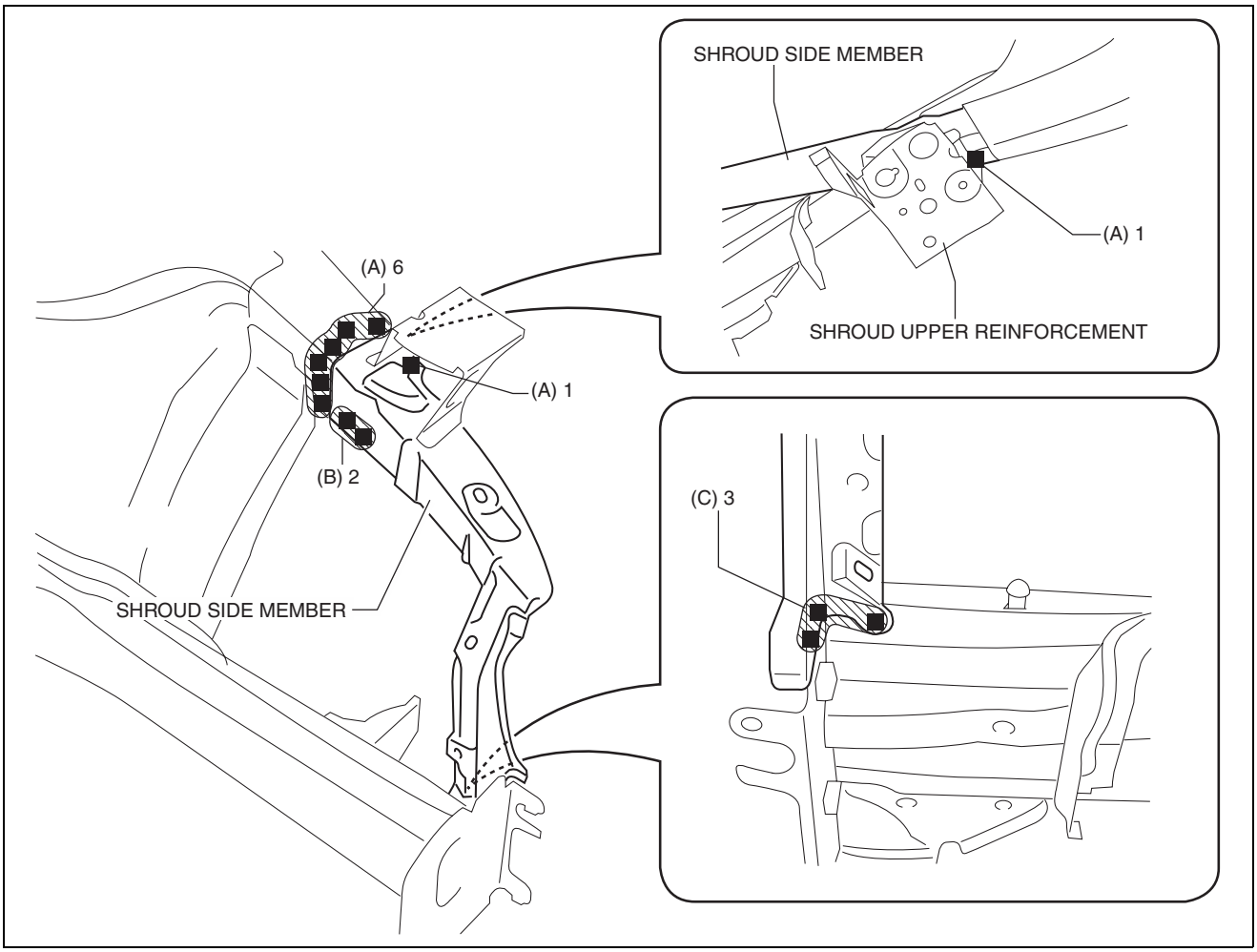

ac5wzb00000020

5. Plug weld the 3 locations indicated by (C) shown in the figure, then install the shroud side member.

SHROUD UPPER REINFORCEMENT REMOVAL [PANEL REPLACEMENT]

id098008927900

Symbol Mark

SYMBOL MARK	MEANING
●	SPOT WELDING

ac5wzb00000021

Removal Procedure

1. Drill the 4 locations shown in the figure.

Note

- When drilling the 4 locations shown in the figure, do not drill a hole all the way through or there could be a problem when installing the new part.

BODY STRUCTURE [PANEL REPLACEMENT]

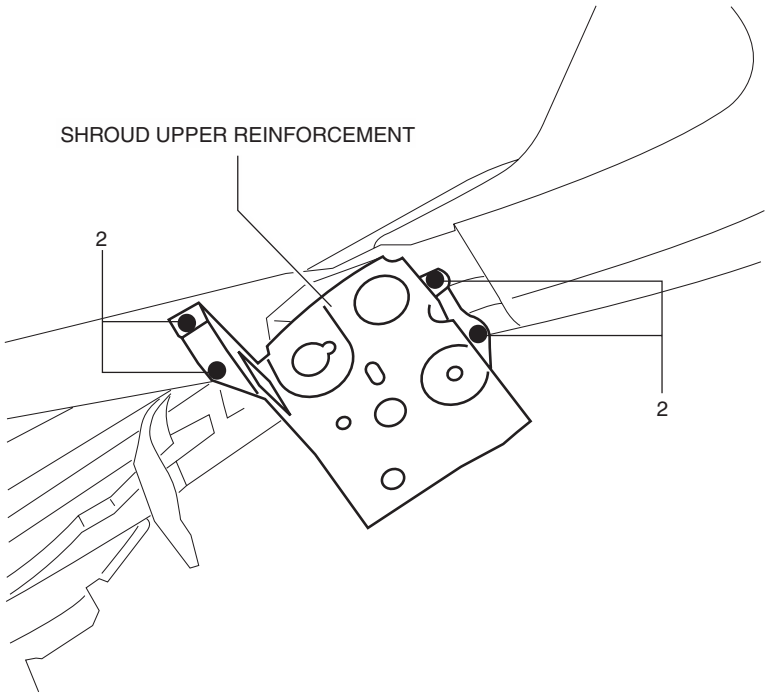

ac5wzb00000240

2. Remove the shroud upper reinforcement.

SHROUD UPPER REINFORCEMENT INSTALLATION [PANEL REPLACEMENT]

id098008928000

Symbol Mark

SYMBOL MARK	MEANING
■	PLUG WELDING (ARC WELDING)

ac5wzb00000213

Installation Procedure

1. When installing new parts, measure and adjust the body as necessary to conform with standard dimensions.
2. Drill holes for the plug welding before installing the new parts.
3. After temporarily installing new parts, make sure the related parts fit properly.
4. Plug weld the 4 locations shown in the figure, then install the shroud upper reinforcement.

BODY STRUCTURE [PANEL REPLACEMENT]

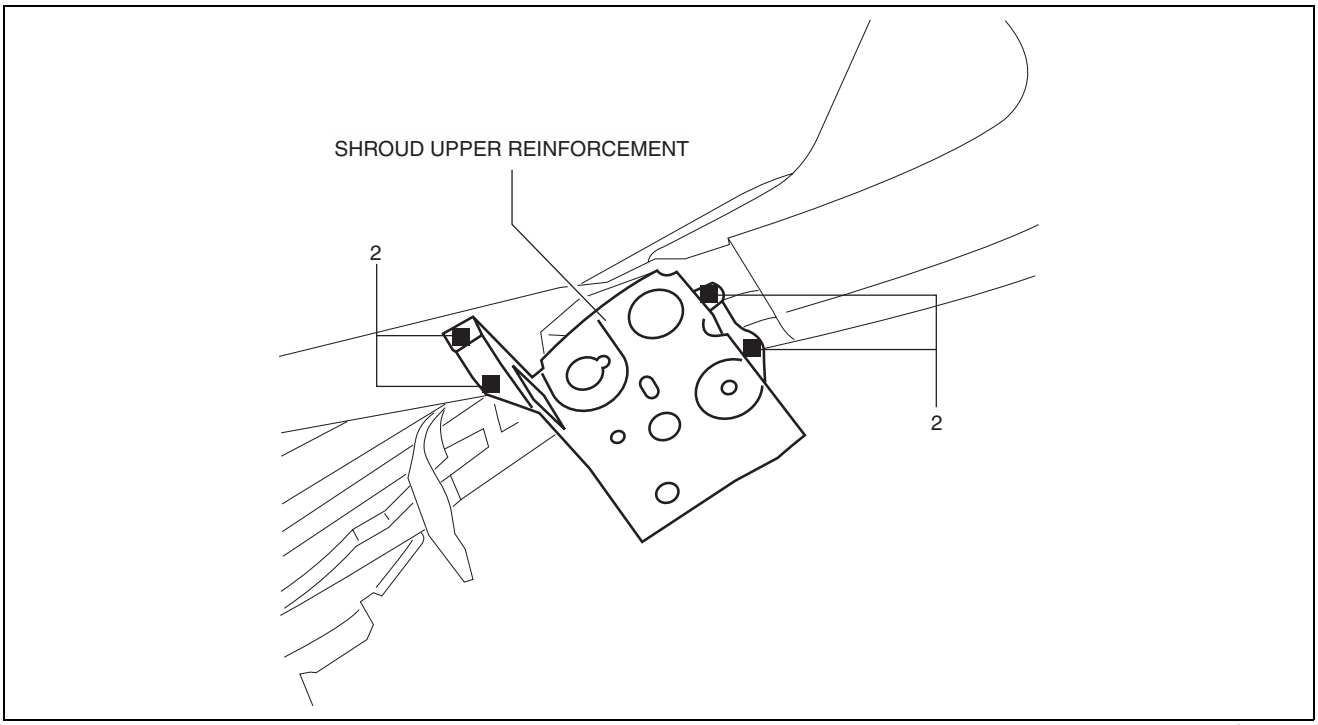

ac5wzb00000241

WIPER BRACKET REMOVAL [PANEL REPLACEMENT]

id098008968800

Symbol Mark

SYMBOL MARK	MEANING
●	SPOT WELDING

ac5wzb00000025

Removal Procedure

1. Drill the 3 locations indicated by (A) from the inside shown in the figure.
2. Drill the 9 locations indicated by (B) shown in the figure.

BODY STRUCTURE [PANEL REPLACEMENT]

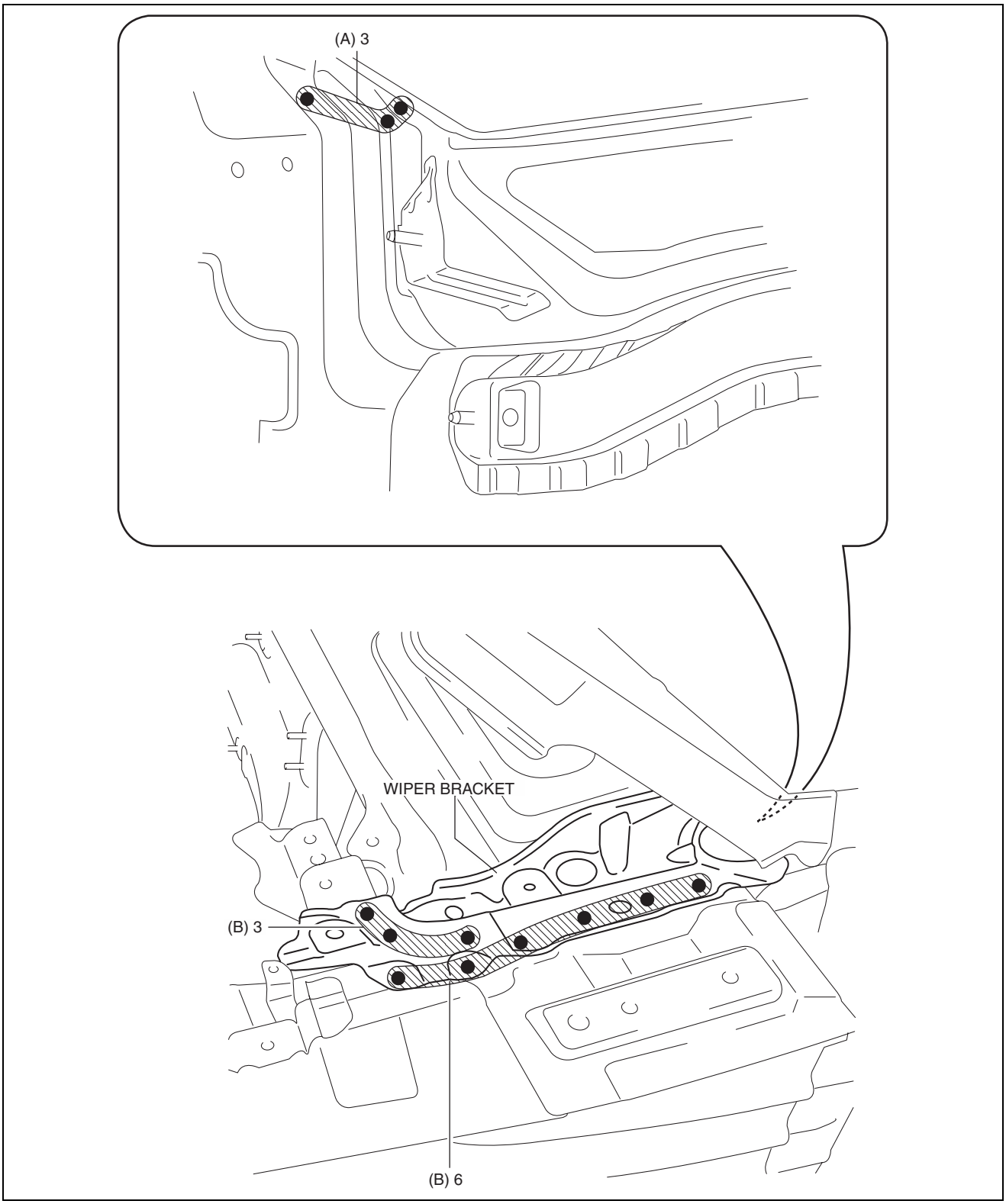

ac5wzb00000026

3. Remove the wiper bracket.

BODY STRUCTURE [PANEL REPLACEMENT]

WIPER BRACKET REMOVAL [PANEL REPLACEMENT]

id098008968900

Symbol Mark

SYMBOL MARK	MEANING
■	PLUG WELDING (ARC WELDING)

ac5wzb00000215

Installation Procedure

1. When installing new parts, measure and adjust the body as necessary to conform with standard dimensions.
2. Drill holes for the plug welding before installing the new parts.
3. After temporarily installing new parts, make sure the related parts fit properly.
4. Plug weld the 9 locations indicated by (A) shown in the figure.
5. Plug weld the 3 locations indicated by (B) from the inside shown in the figure, then install the wiper bracket.

BODY STRUCTURE [PANEL REPLACEMENT]

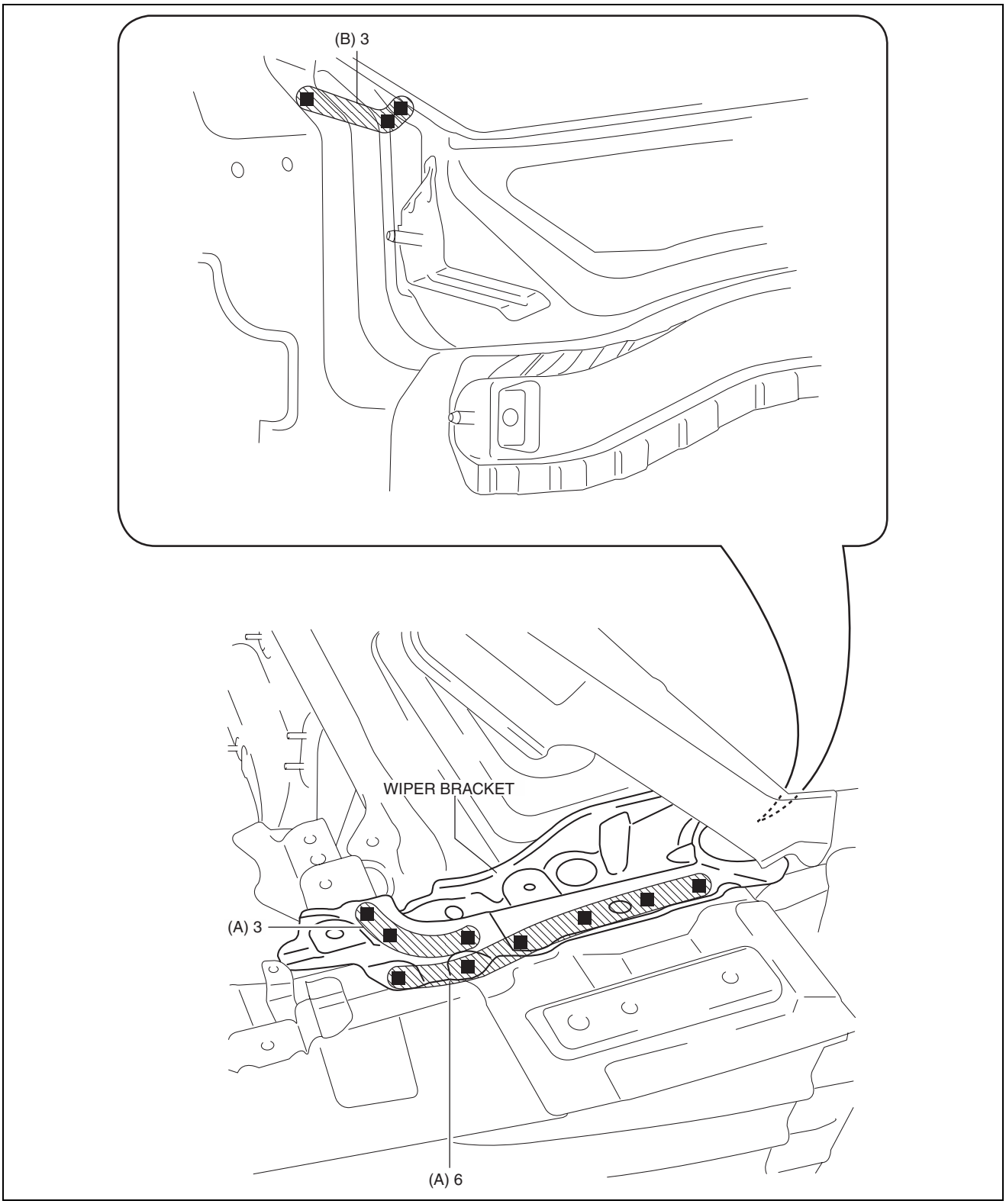

ac5wzb00000028

BODY STRUCTURE [PANEL REPLACEMENT]

UPPER COWL SIDE REINFORCEMENT REMOVAL [PANEL REPLACEMENT]

id098008828500

Symbol Mark

SYMBOL MARK	MEANING
●	SPOT WELDING

ac5wzb00000029

Removal Procedure

1. Drill the 13 locations indicated by (A) shown in the figure.
2. Drill the 8 locations indicated by (B) shown in the figure.

Note

- When a drill the 8 locations indicated by (B) shown in the figure, the through hole is not made in consideration of the workability at the installing.

3. Remove the upper cowl side reinforcement.

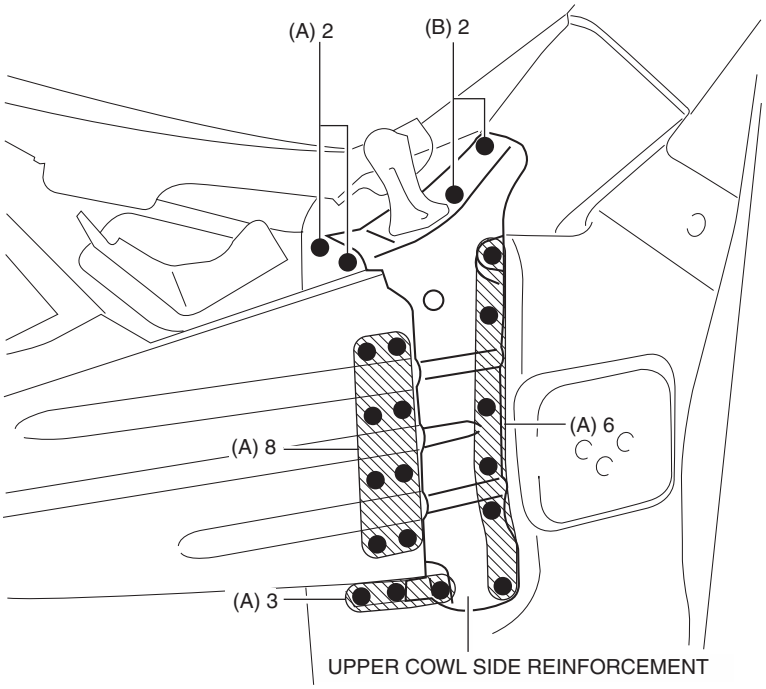

ac5wzb00000264

UPPER COWL SIDE REINFORCEMENT INSTALLATION [PANEL REPLACEMENT]

id098008828600

Symbol Mark

SYMBOL MARK	MEANING
■	PLUG WELDING (ARC WELDING)

ac5wzb00000211

Installation Procedure

1. When installing new parts, measure and adjust the body as necessary to conform with standard dimensions.
2. Drill holes for the plug welding before installing the new parts.
3. After temporarily installing new parts, make sure the related parts fit properly.
4. Plug weld the 21 locations shown in the figure, then install the upper cowl side reinforcement.

BODY STRUCTURE [PANEL REPLACEMENT]

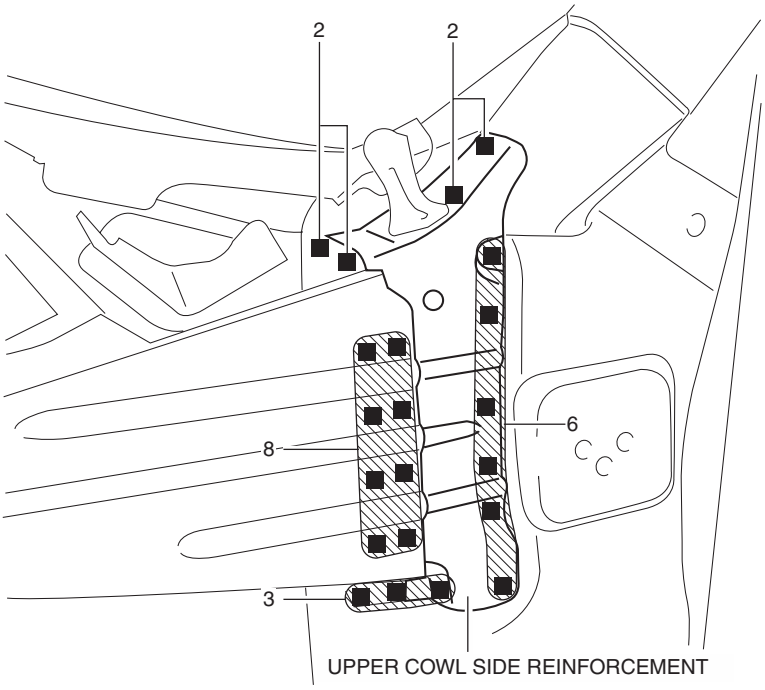

ac5wzb00000327

LOWER COWL SIDE REINFORCEMENT REMOVAL [PANEL REPLACEMENT]

id098008828700

Symbol Mark

SYMBOL MARK	MEANING
●	SPOT WELDING

ac5wzb00000033

Removal Procedure

1. Drill the 41 locations shown in the figure.

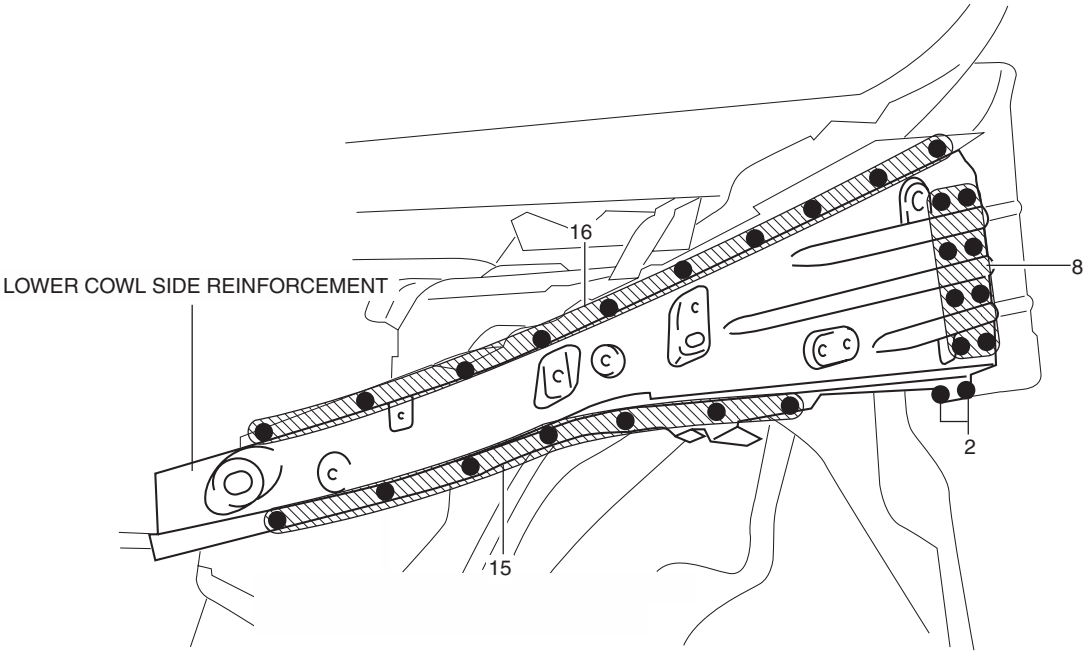

ac5wzb00000265

BODY STRUCTURE [PANEL REPLACEMENT]

2. Remove the lower cowl side reinforcement.

LOWER COWL SIDE REINFORCEMENT INSTALLATION [PANEL REPLACEMENT]

id098008828800

Symbol Mark

SYMBOL MARK	MEANING
●	SPOT WELDING
■	PLUG WELDING (ARC WELDING)

ac5wzb00000212

Installation Procedure

1. When installing new parts, measure and adjust the body as necessary to conform with standard dimensions.
2. Drill holes for the plug welding before installing the new parts.
3. After temporarily installing new parts, make sure the related parts fit properly.
4. Spot weld the 19 locations indicated by (A) shown in the figure.
5. Plug weld the 26 locations indicated by (B) shown in the figure, then install the lower cowl side reinforcement.

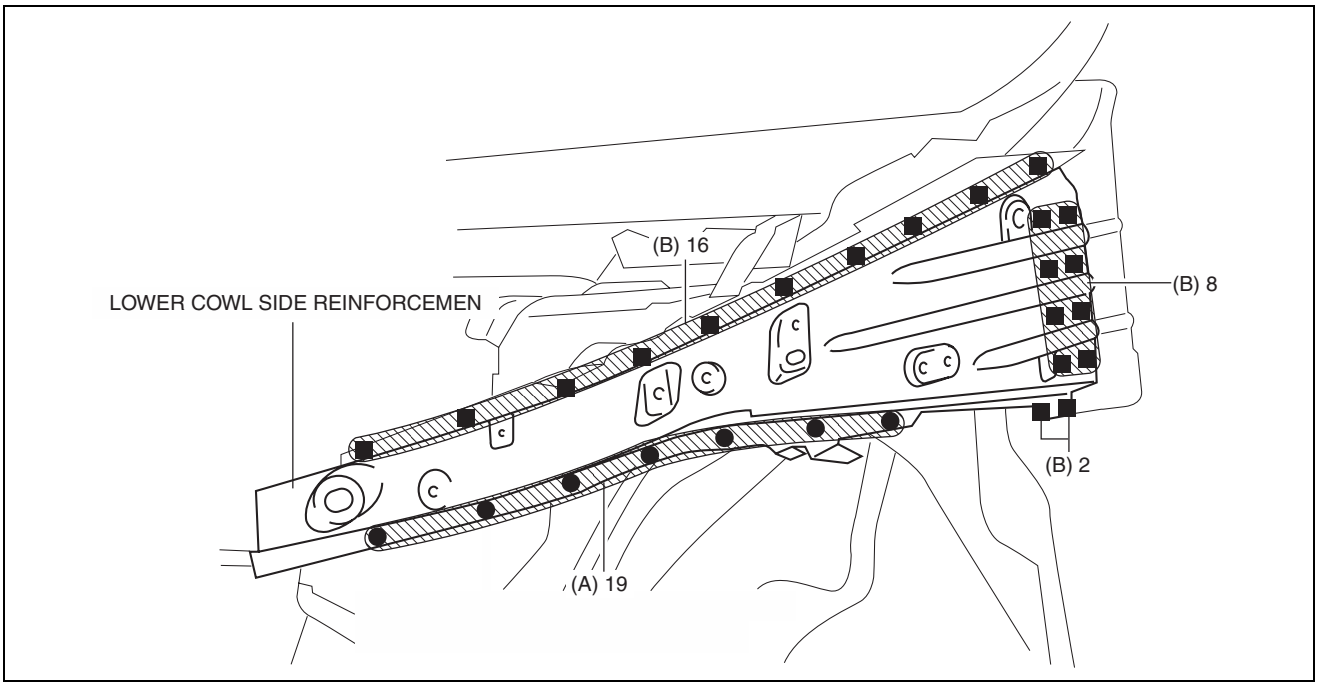

ac5wzb00000266

WHEEL APRON COMPONENT REMOVAL [PANEL REPLACEMENT]

id098008746000

Symbol Mark

SYMBOL MARK	MEANING
●	SPOT WELDING

ac5wzb00000037

Removal Procedure

1. Drill the 14 locations indicated by (A) from the front wheel housing side shown in the figure.
2. Drill the 11 locations indicated by (B) shown in the figure.
3. Drill the 4 locations indicated by (C) shown in the figure.

Note

- When drilling the 14 locations indicated by (A) and 4 locations indicated by (C) shown in the figure, do not drill a hole all the way through or there could be a problem when installing the new part.

BODY STRUCTURE [PANEL REPLACEMENT]

4. Drill the 9 locations indicated by (D) shown in the figure.

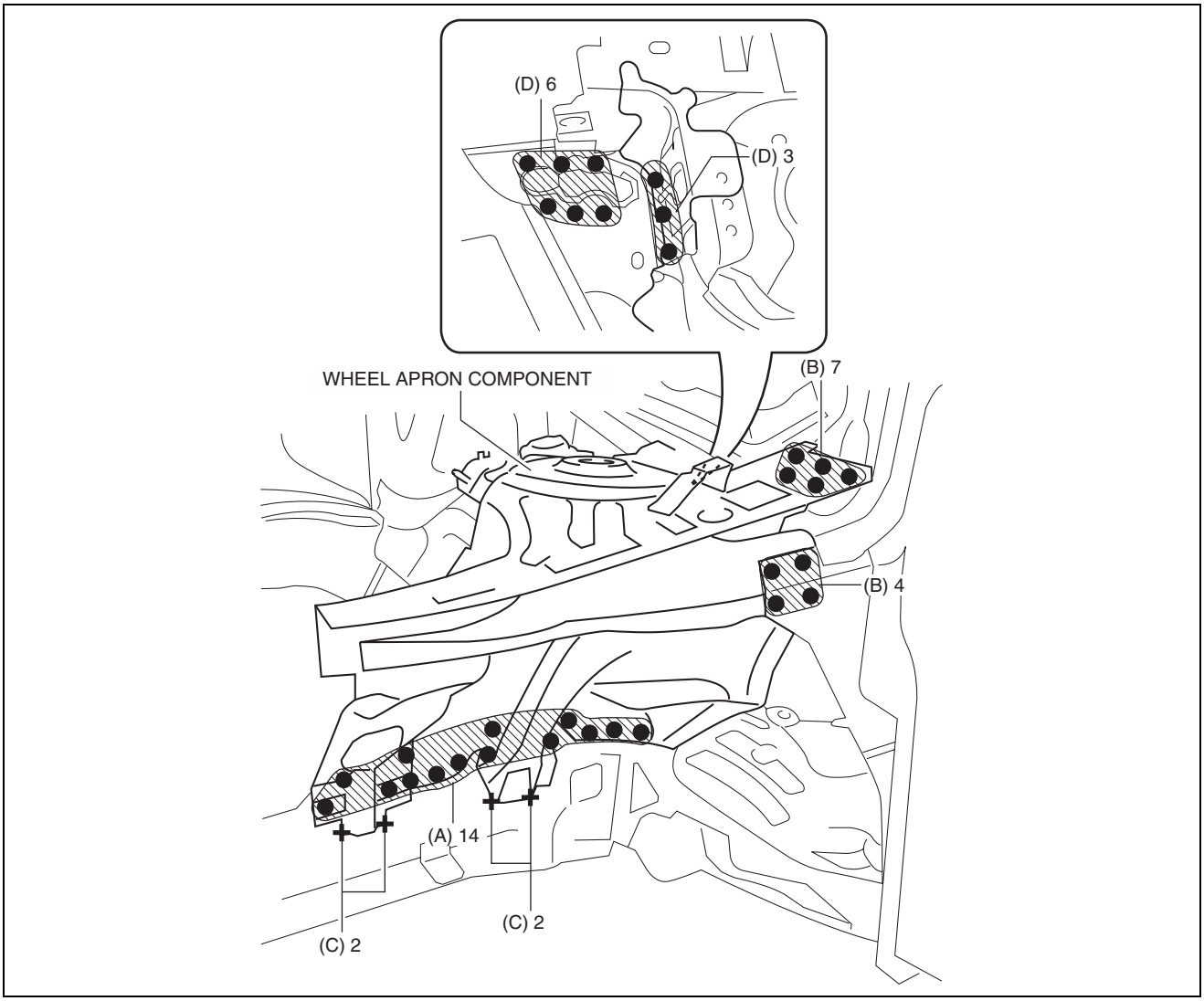

ac5wzb00000331

5. Drill the 12 locations indicated by (E) from the inside shown in the figure.

BODY STRUCTURE [PANEL REPLACEMENT]

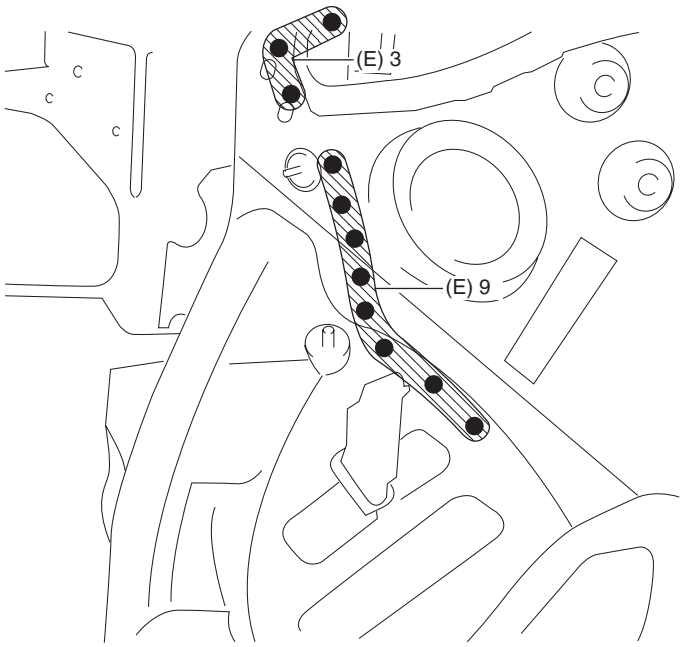

ac5wzb00000309

6. Remove the wheel apron component.

WHEEL APRON COMPONENT INSTALLATION [PANEL REPLACEMENT]

id098008746100

Symbol Mark

SYMBOL MARK	MEANING
●	SPOT WELDING
■	PLUG WELDING (ARC WELDING)

ac5wzb00000209

Installation Procedure

1. When installing new parts, measure and adjust the body as necessary to conform with standard dimensions.
2. Drill holes for the plug welding before installing the new parts.
3. After temporarily installing new parts, make sure the related parts fit properly.
4. Plug weld the 14 locations indicated by (A) from the front wheel housing side shown in the figure.
5. Spot weld the 5 locations indicated by (B) shown in the figure.
6. Arc weld the 4 locations indicated by (C) shown in the figure.
7. Plug weld the 9 locations indicated by (D) shown in the figure.

BODY STRUCTURE [PANEL REPLACEMENT]

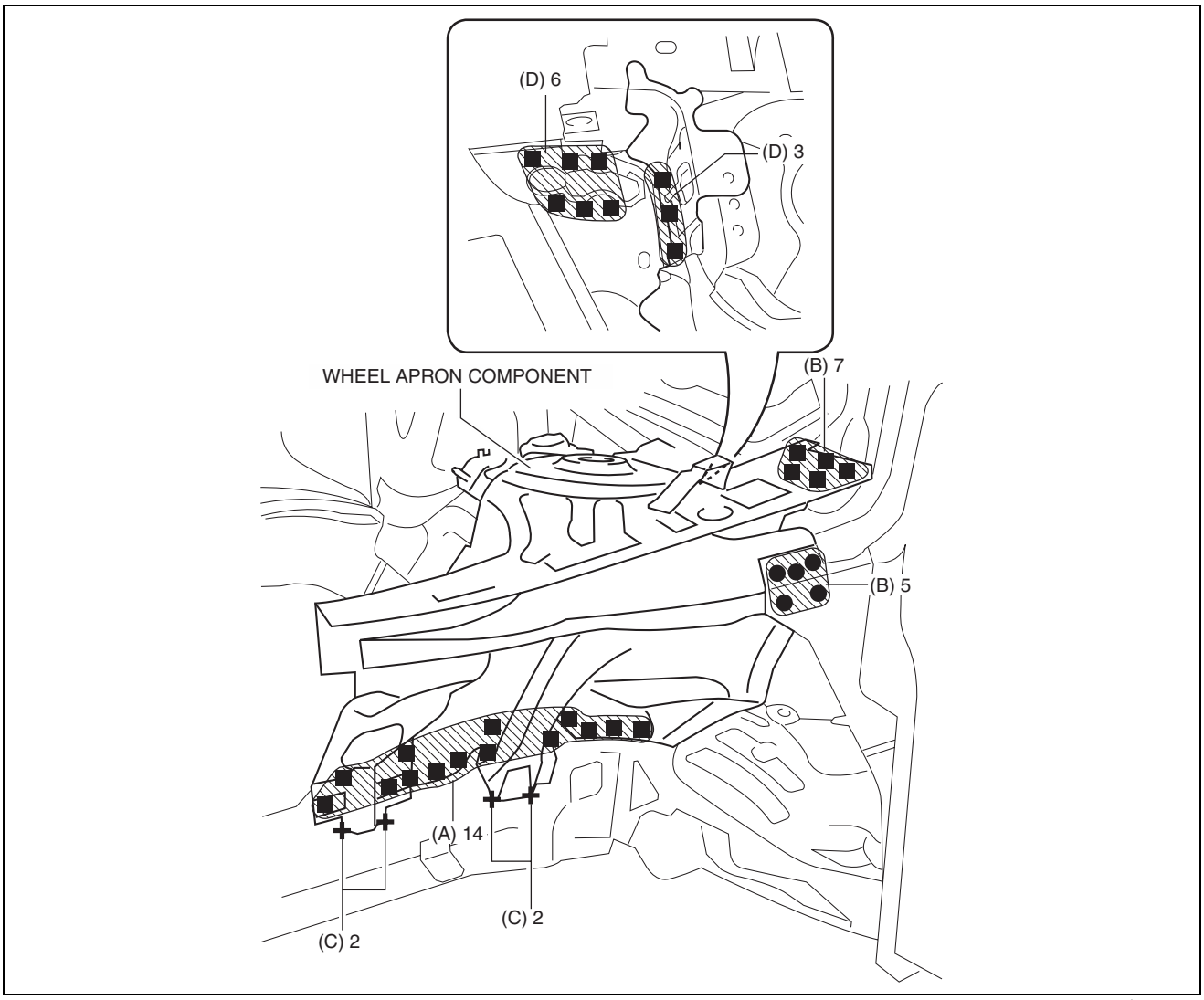

ac5wzb00000332

8. Plug weld the 12 locations indicated by (E) from the inside shown in the figure, then install the wheel apron component.

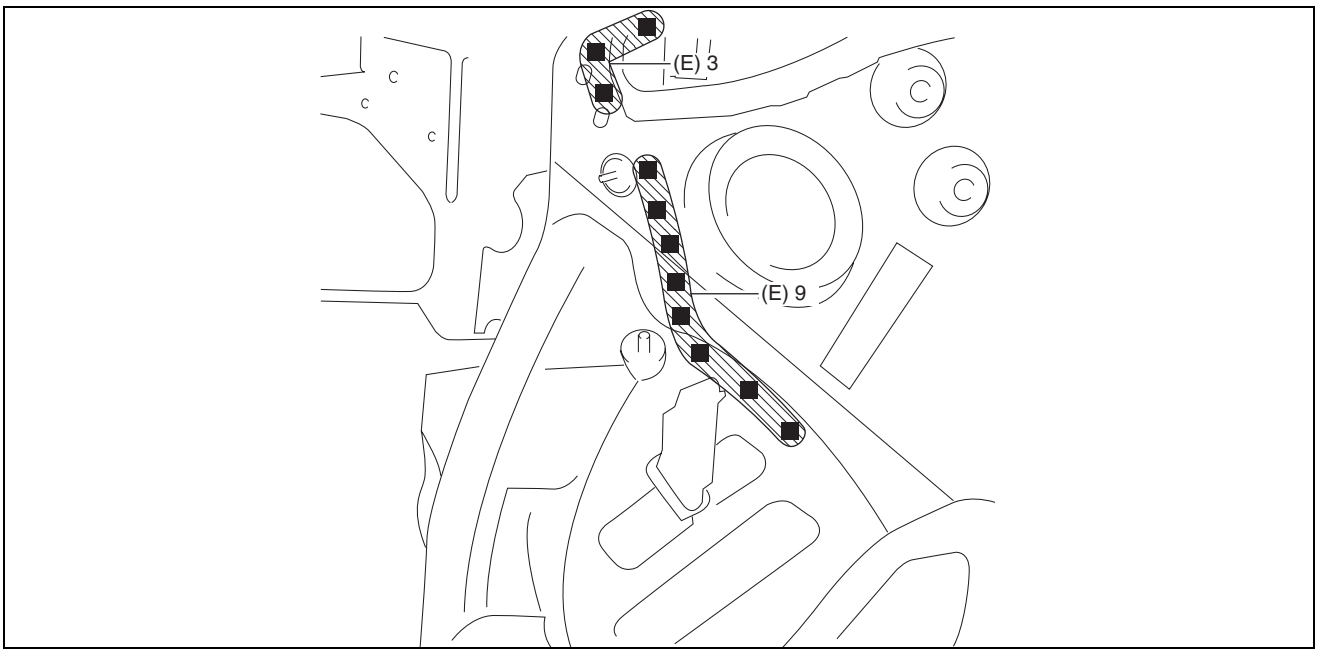

ac5uub00000049

BODY STRUCTURE [PANEL REPLACEMENT]

FRONT FENDER JUNCTION REMOVAL [PANEL REPLACEMENT]

id098008828300

Symbol Mark

SYMBOL MARK	MEANING
●	SPOT WELDING

ac5wzb00000042

Removal Procedure

1. Drill the 3 locations shown in the figure.

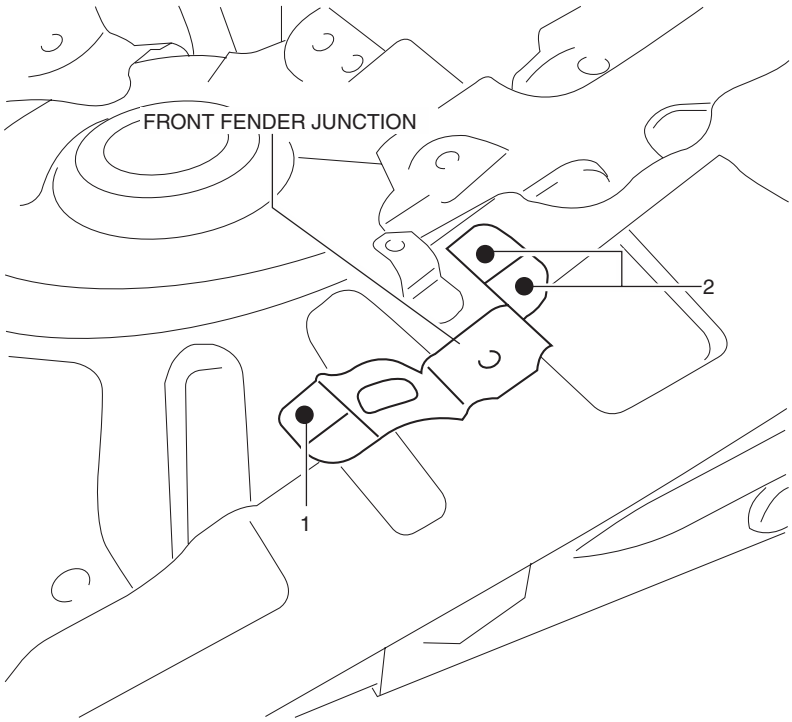

ac5wzb00000043

2. Remove the front fender junction.

FRONT FENDER JUNCTION INSTALLATION [PANEL REPLACEMENT]

id098008828400

Symbol Mark

SYMBOL MARK	MEANING
■	PLUG WELDING (ARC WELDING)

ac5wzb00000210

Installation Procedure

1. When installing new parts, measure and adjust the body as necessary to conform with standard dimensions.
2. Drill holes for the plug welding before installing the new parts.
3. After temporarily installing new parts, make sure the related parts fit properly.
4. Plug weld the 3 locations shown in the figure.

BODY STRUCTURE [PANEL REPLACEMENT]

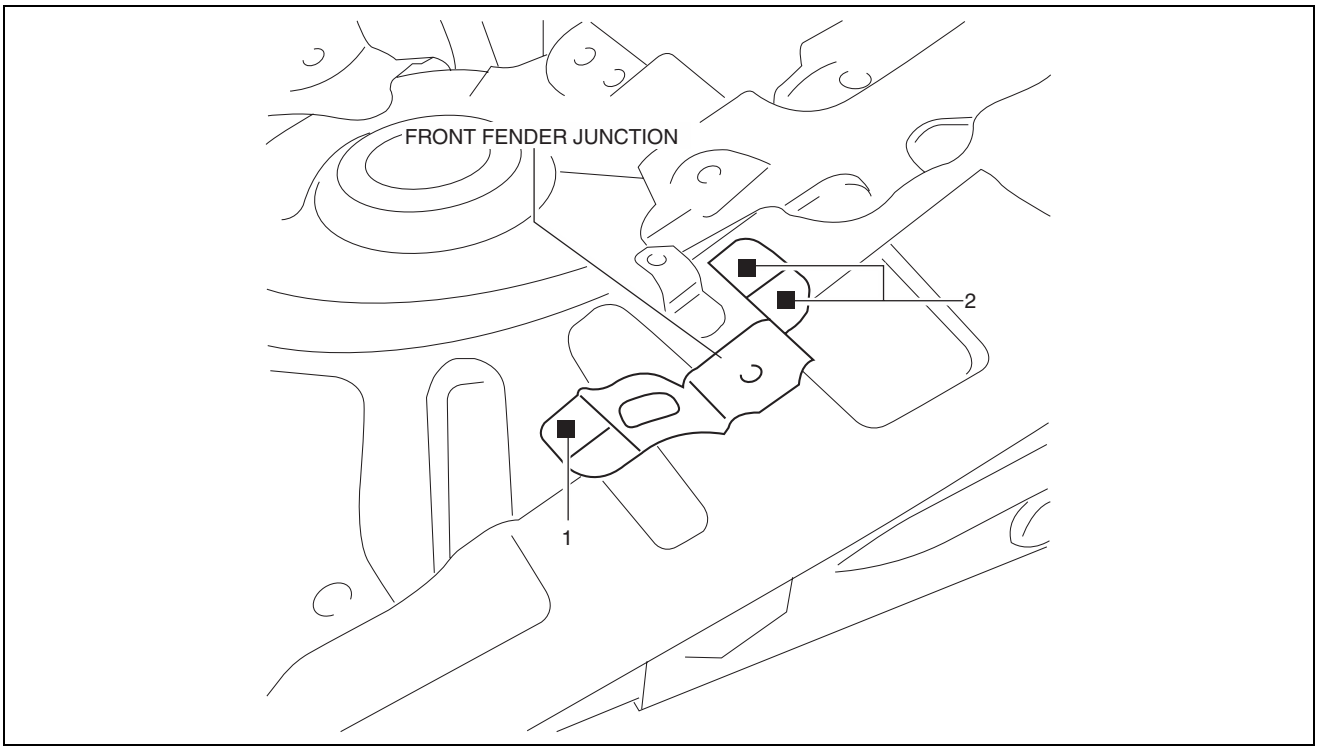

ac5wzb00000310

FRONT SIDE FRAME REMOVAL [PANEL REPLACEMENT]

id098008605900

Symbol Mark

SYMBOL MARK	MEANING
●	SPOT WELDING

ac5wzb00000046

Removal Procedure

1. Drill the 15 locations indicated by (A) shown in the figure.
2. Drill the 4 locations indicated by (B) shown in the figure.

Note

- When drilling the 4 locations indicated by (B) shown in the figure, do not drill a hole all the way through or there could be a problem when installing the new part.

BODY STRUCTURE [PANEL REPLACEMENT]

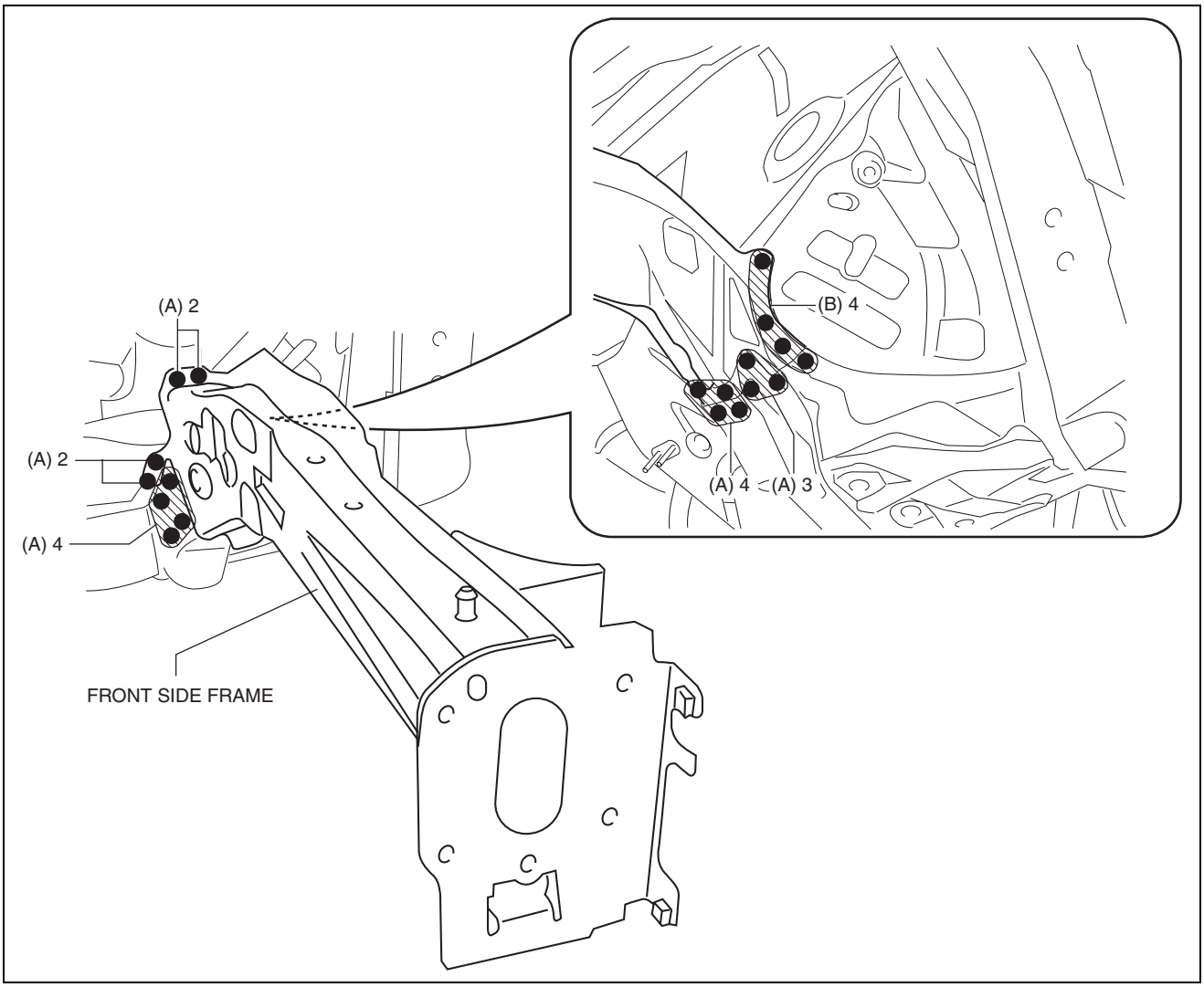

ac5uub00000050

3. Remove the front side frame.

FRONT SIDE FRAME INSTALLATION [PANEL REPLACEMENT]

id098008606000

Symbol Mark

SYMBOL MARK	MEANING
■	PLUG WELDING (ARC WELDING)

ac5wzb00000207

Installation Procedure

1. When installing new parts, measure and adjust the body as necessary to conform with standard dimensions.
2. Drill holes for the plug welding before installing the new parts.
3. After temporarily installing new parts, make sure the related parts fit properly.
4. Plug weld the 19 locations shown in the figure, then install the front side frame.

BODY STRUCTURE [PANEL REPLACEMENT]

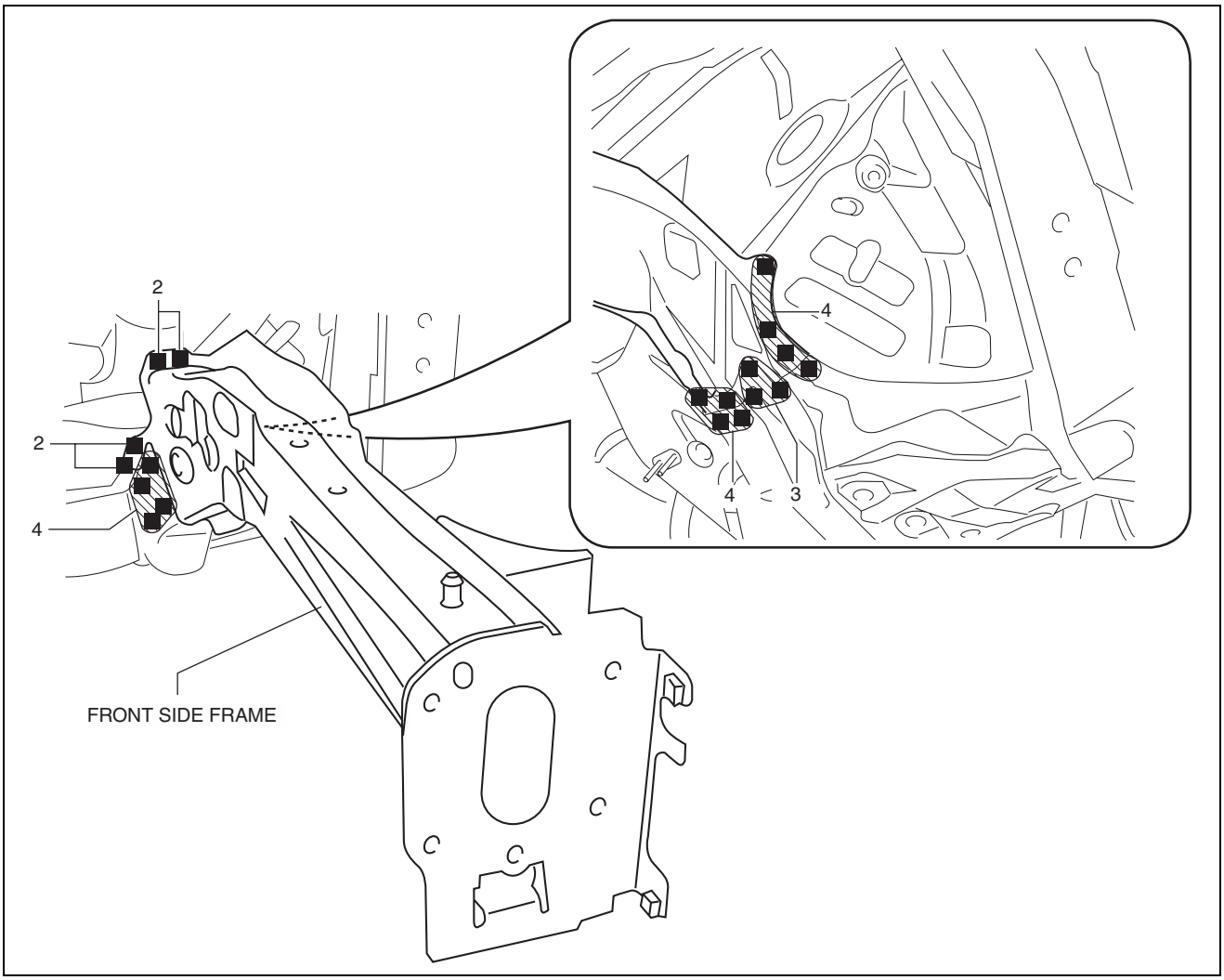

ac5uub00000051

FRONT SIDE FRAME (PARTIAL CUTTING) REMOVAL [PANEL REPLACEMENT]

id098008742100

Symbol Mark

SYMBOL MARK	MEANING
●	SPOT WELDING
⁄⁄⁄⁄⁄⁄⁄⁄⁄⁄⁄⁄⁄⁄⁄⁄⁄⁄⁄⁄	ROUGH CUT LOCATION

ac5jjb00000063

Removal Procedure

1. Drill the 4 locations indicated by (A) shown in the figure, then remove suspension mounting reinforcement and outer frame reinforcement.
2. Rough cut location indicated by (B) shown in the figure.
3. Drill the 6 locations indicated by (C) shown in the figure, then remove the front side frame (inner).

BODY STRUCTURE [PANEL REPLACEMENT]

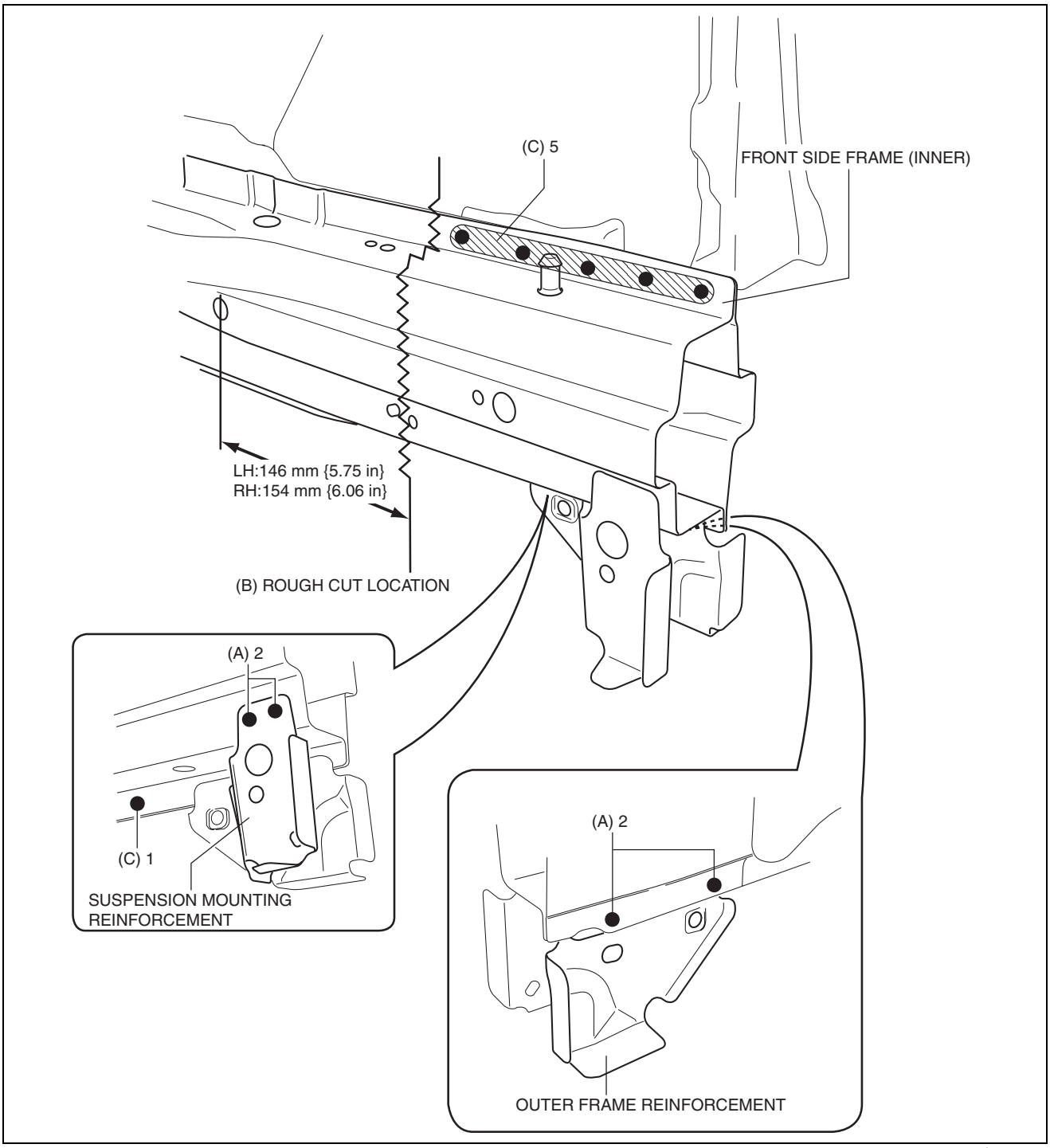

ac5wzb00000313

4. Rough cut location indicated by (D) shown in the figure.
5. Drill the 3 locations indicated by (E) shown in the figure.

BODY STRUCTURE [PANEL REPLACEMENT]

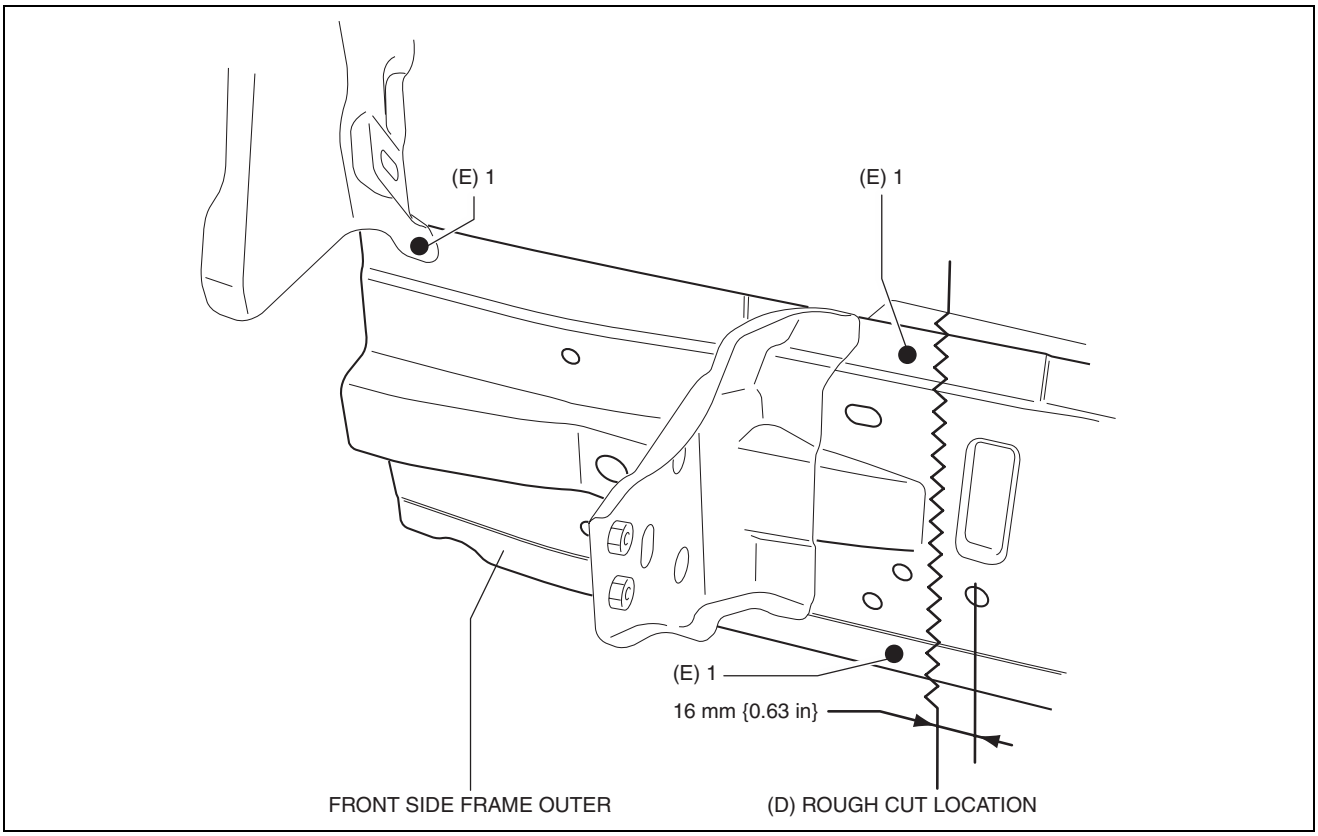

ac5wzb00000314

6. Remove the front side frame (outer).

FRONT SIDE FRAME (PARTIAL CUTTING) INSTALLATION [PANEL REPLACEMENT]

id098008742200

Symbol Mark

SYMBOL MARK	MEANING
■	PLUG WELDING (ARC WELDING)
∧∧∧∧∧∧∧∧∧∧∧∧∧∧∧∧	ROUGH CUT LOCATION
++++++++++++++++++++++++++++++++	CONTINUOUS ARC WELDING (CUT-AND-JOIN LOCATION)

ac5jjb00000066

Installation Procedure

Caution
- **The cut and joint area indicates the maximum size range of the installation position.**

1. Drill holes for the plug welding before installing the new parts.
2. When installing the new parts, trial-fit new and existing parts, and then measure and adjust the body to conform with standard dimensions.
3. Cut and join location indicated by (A) shown in the figure.
4. Plug weld the 3 locations indicated by (B) shown in the figure, then install the front side frame (outer).

BODY STRUCTURE [PANEL REPLACEMENT]

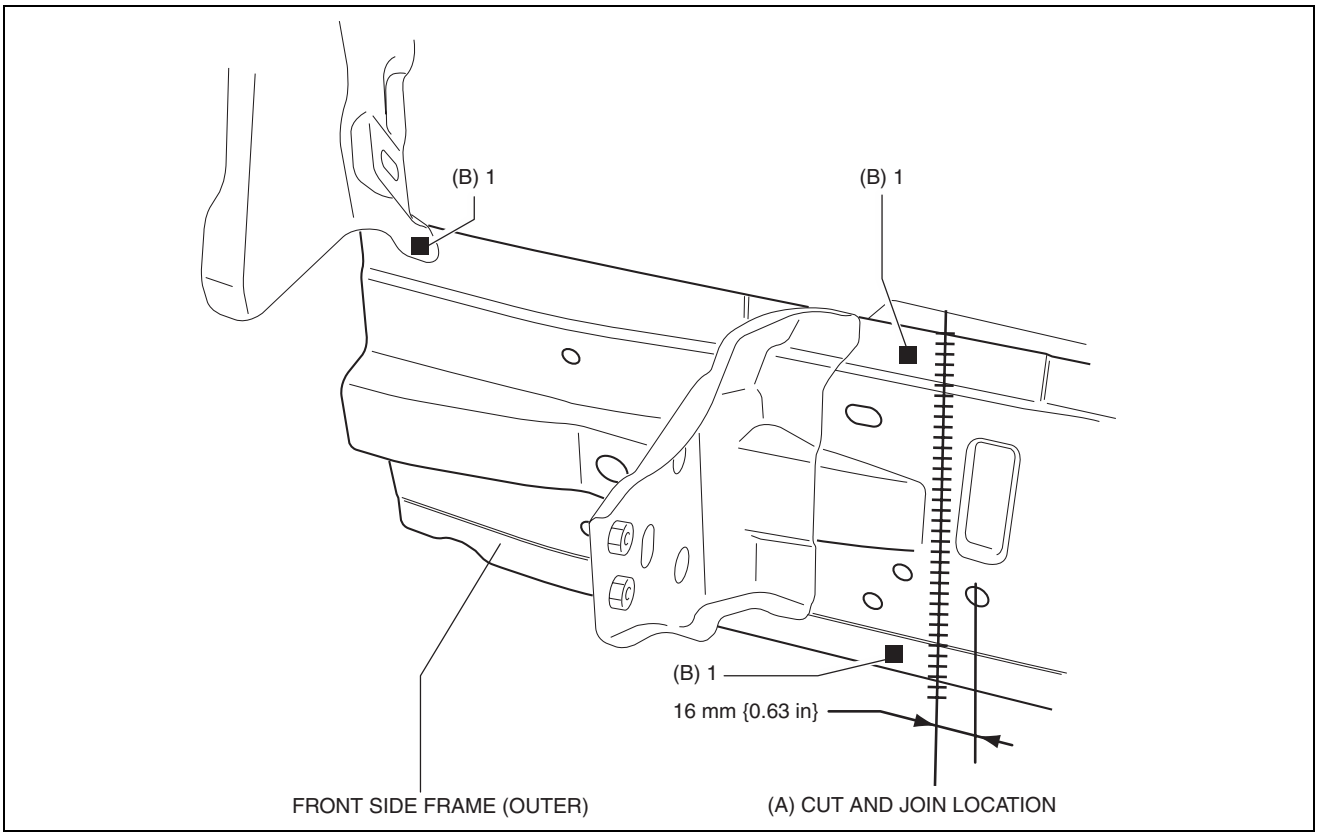

ac5wzb00000274

5. To cut and join the new and existing parts, rough cut the new part at the specified location shown in the figure, and chamfer the joint surfaces of the new and existing parts.

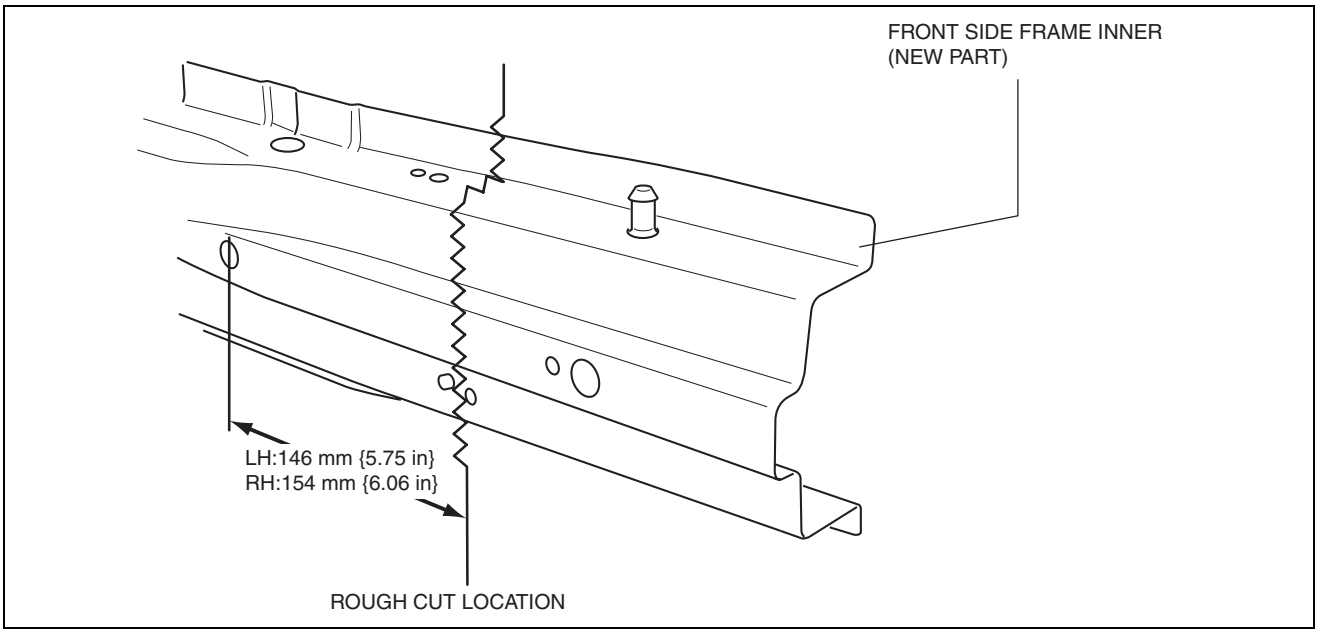

ac5wzb00000237

6. Make a reinforcement panel using the material from the front side frame (inner).
7. Plug weld the 4 locations indicated by (B) shown in the figure, then install the reinforcement to the new front side frame (inner).

BODY STRUCTURE [PANEL REPLACEMENT]

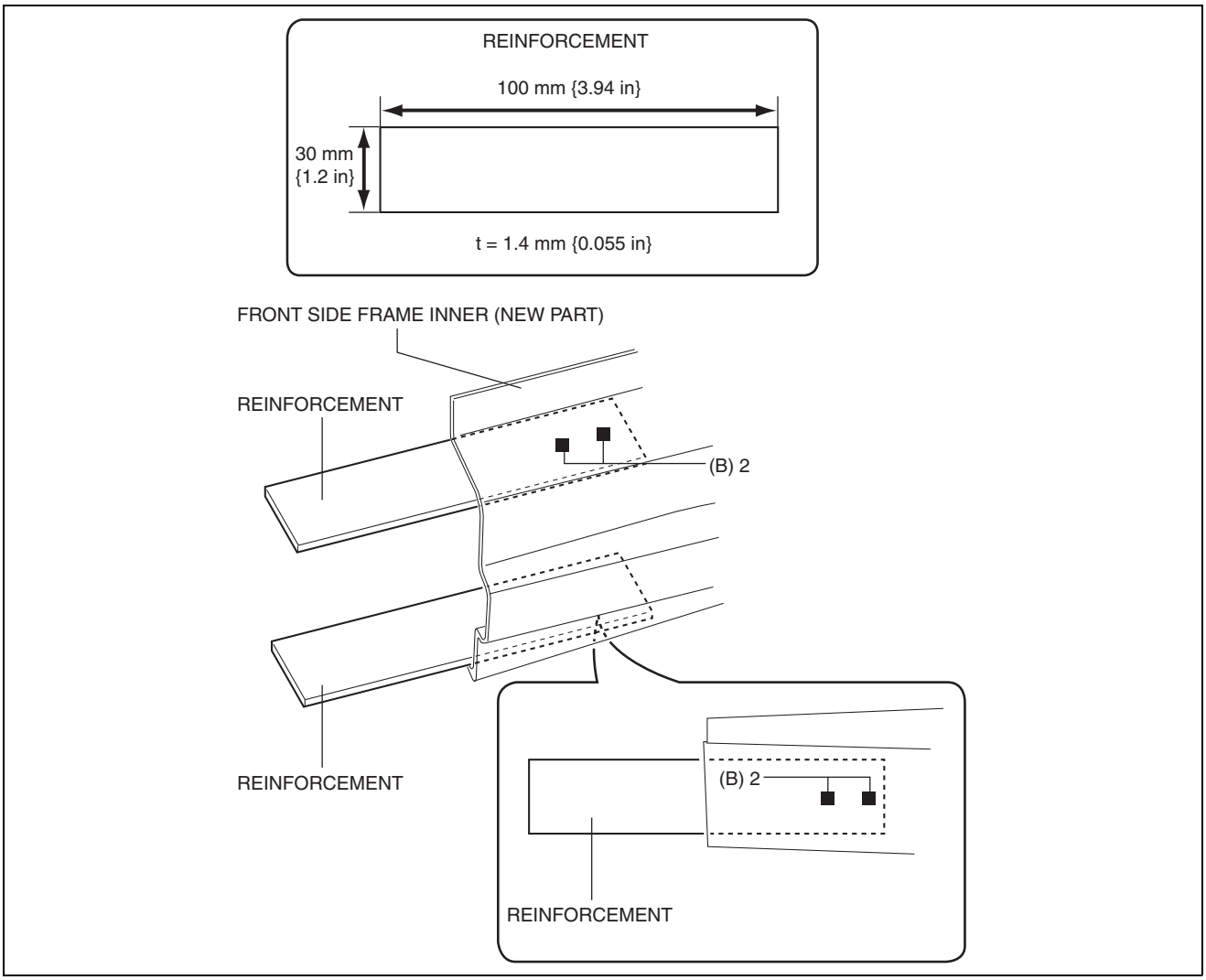

ac5wzb00000238

8. Plug weld the 3 locations indicated by (C) shown in the figure.

Note
- Press fit the reinforcement panel and the body side material, and then weld them.

9. Cut and location indicated by (D) shown in the figure.
10. Plug weld the 6 locations indicated by (E) shown in the figure, then install the front side frame inner.
11. Plug weld the 5 locations indicated by (F) shown in the figure, then install suspension mounting reinforcement and outer frame reinforcement.

BODY STRUCTURE [PANEL REPLACEMENT]

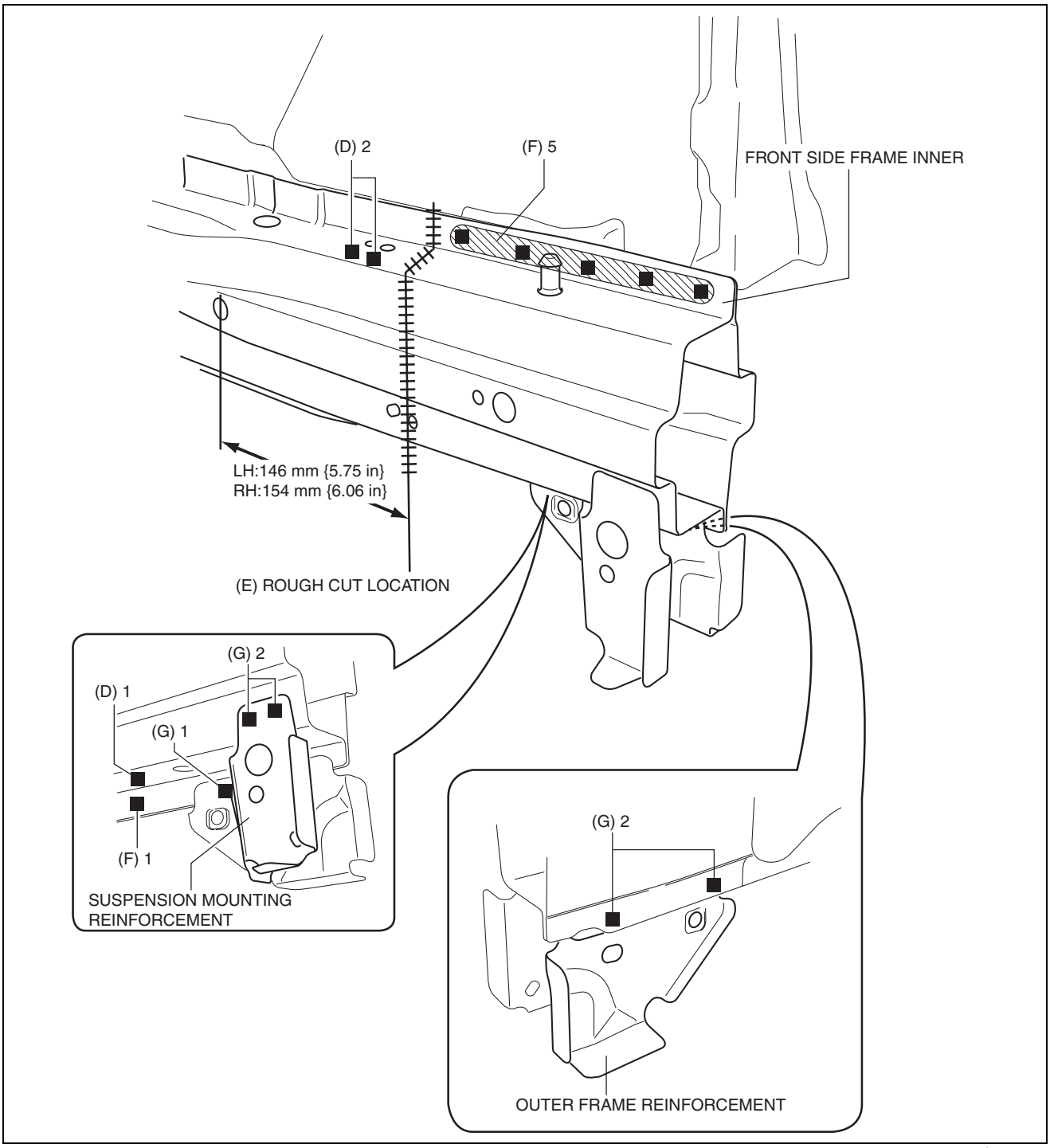

ac5wzb00000239

COWL UPPER PLATE REMOVAL [PANEL REPLACEMENT]

id098008957100

Symbol Mark

SYMBOL MARK	MEANING
●	SPOT WELDING

ac5wzb00000050

Removal Procedure

1. Drill the 9 locations indicated by (A) shown in the figure.

BODY STRUCTURE [PANEL REPLACEMENT]

2. Drill the 2 locations by (B) from the front wheel housing side shown in the figure.
3. Drill the 2 locations indicated by (C) from the inside shown in the figure.

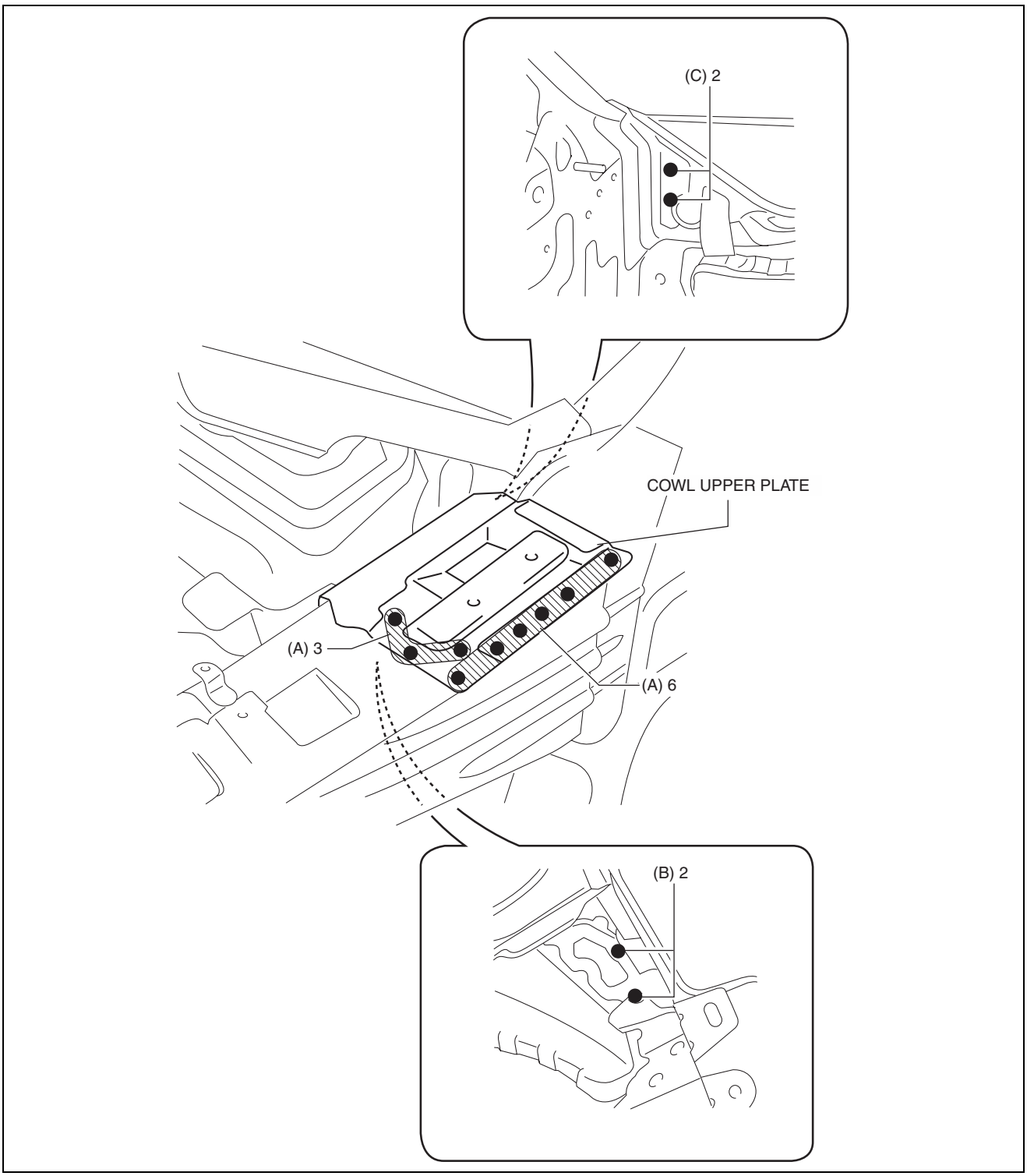

ac5wzb00000051

4. Remove the cowl upper plate.

BODY STRUCTURE [PANEL REPLACEMENT]

COWL UPPER PLATE INSTALLATION [PANEL REPLACEMENT]

id098008957200

Symbol Mark

SYMBOL MARK	MEANING
■	PLUG WELDING (ARC WELDING)

ac5wzb00000214

Installation Procedure

1. When installing new parts, measure and adjust the body as necessary to conform with standard dimensions.
2. Drill holes for the plug welding before installing the new parts.
3. After temporarily installing new parts, make sure the related parts fit properly.
4. Plug weld the 9 locations indicated by (A) shown in the figure.
5. Plug weld the 2 locations indicated by (B) from the front wheel housing side shown in the figure.
6. Plug weld the 2 locations indicated by (C) from the inside shown in the figure, then install the cowl upper plate.

BODY STRUCTURE [PANEL REPLACEMENT]

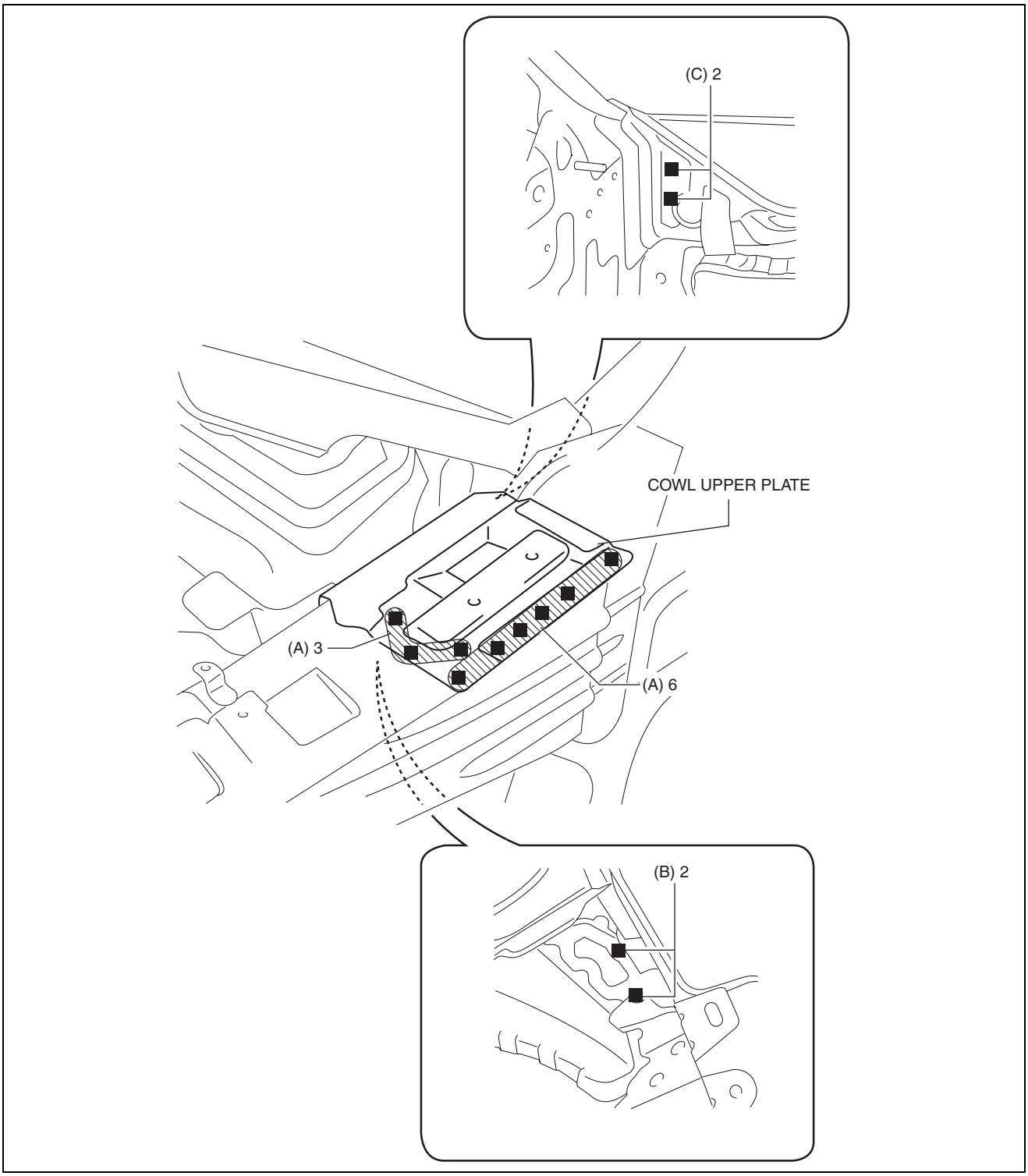

ac5wzb00000053

TORQUE BOX REMOVAL [PANEL REPLACEMENT]

id098008607100

Symbol Mark

SYMBOL MARK	MEANING
●	SPOT WELDING

ac5wzb00000054

BODY STRUCTURE [PANEL REPLACEMENT]

Removal Procedure

1. Drill the 19 locations indicated by (A) shown in the figure.

Note

- When drilling the 19 locations indicated by (A) shown in the figure, do not drill a hole all the way through or there could be a problem when installing the new part.

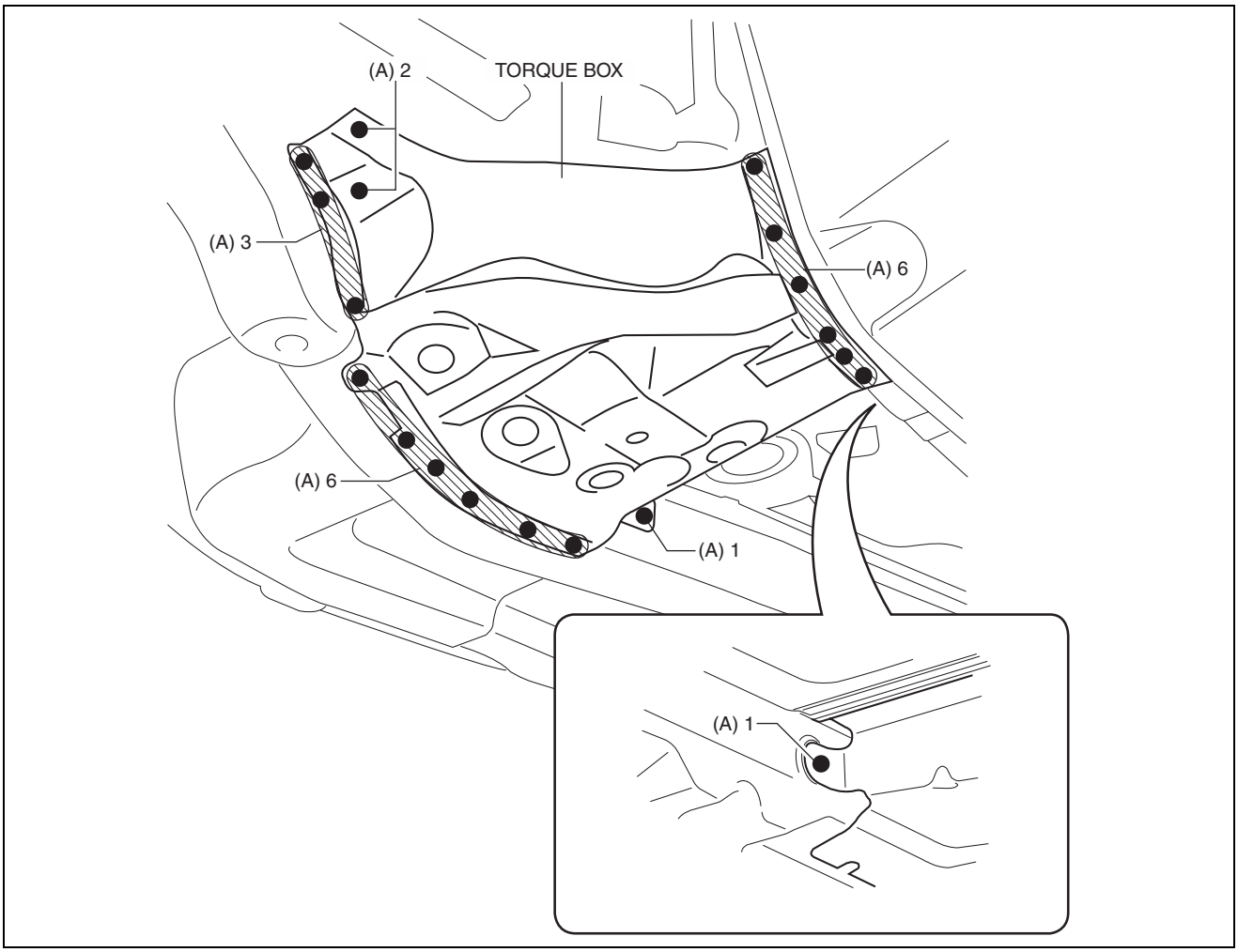

ac5wzb00000055

2. Drill the 8 locations indicated by (B) from the inside shown in the figure.

BODY STRUCTURE [PANEL REPLACEMENT]

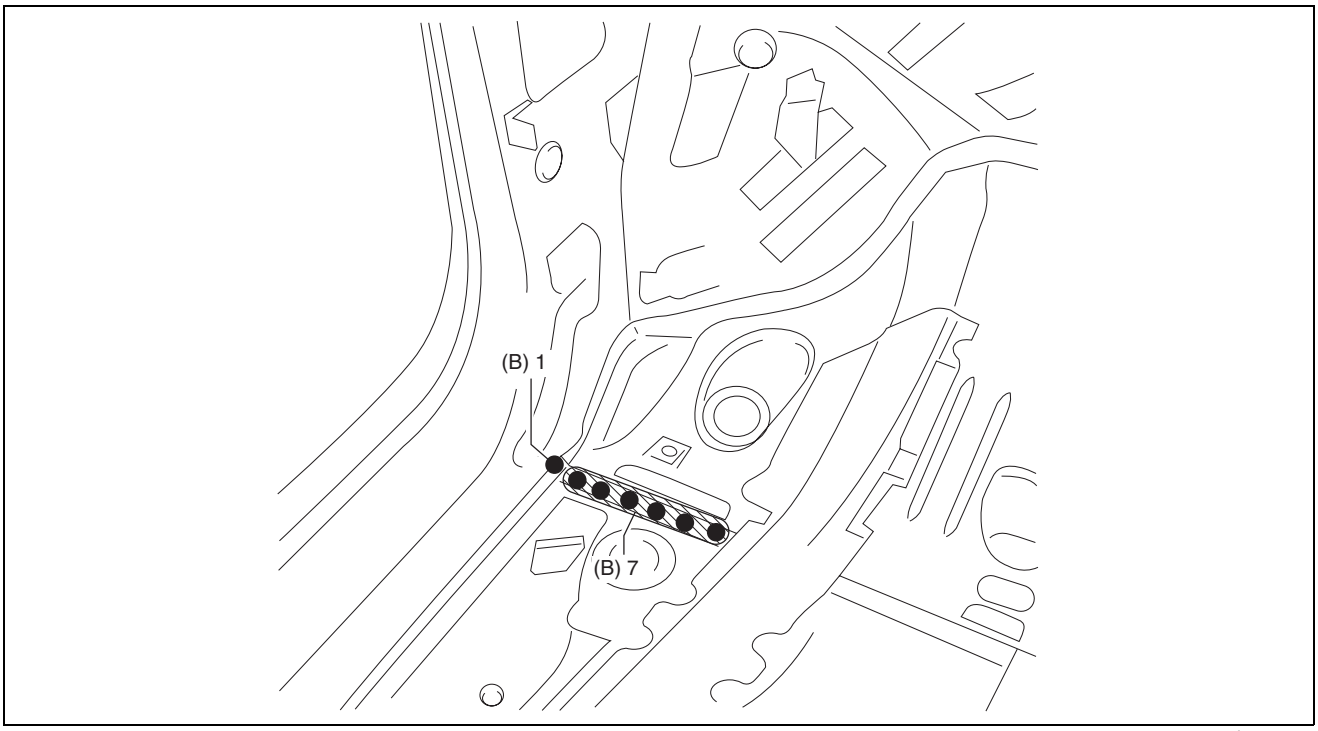

ac5wzb00000056

3. Remove the torque box.

TORQUE BOX INSTALLATION [PANEL REPLACEMENT]

id098008607200

Symbol Mark

SYMBOL MARK	MEANING
■	PLUG WELDING (ARC WELDING)

ac5wzb00000208

Installation Procedure

1. When installing new parts, measure and adjust the body as necessary to conform with standard dimensions.
2. Drill holes for the plug welding before installing the new parts.
3. After temporarily installing new parts, make sure the related parts fit properly.
4. Plug weld the 8 locations indicated by (A) from the inside shown in the figure.

BODY STRUCTURE [PANEL REPLACEMENT]

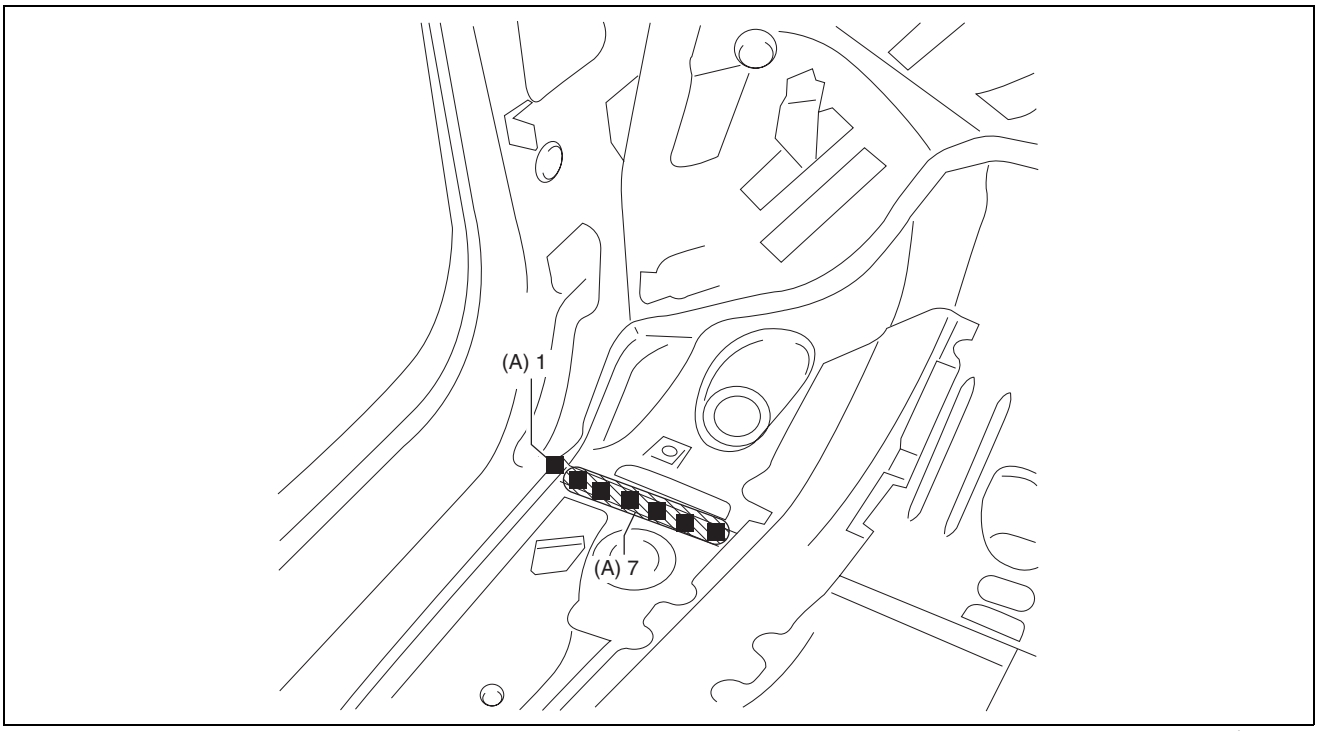

ac5wzb00000058

5. Plug weld the 19 locations indicated by (B) shown in the figure, then install the torque box.

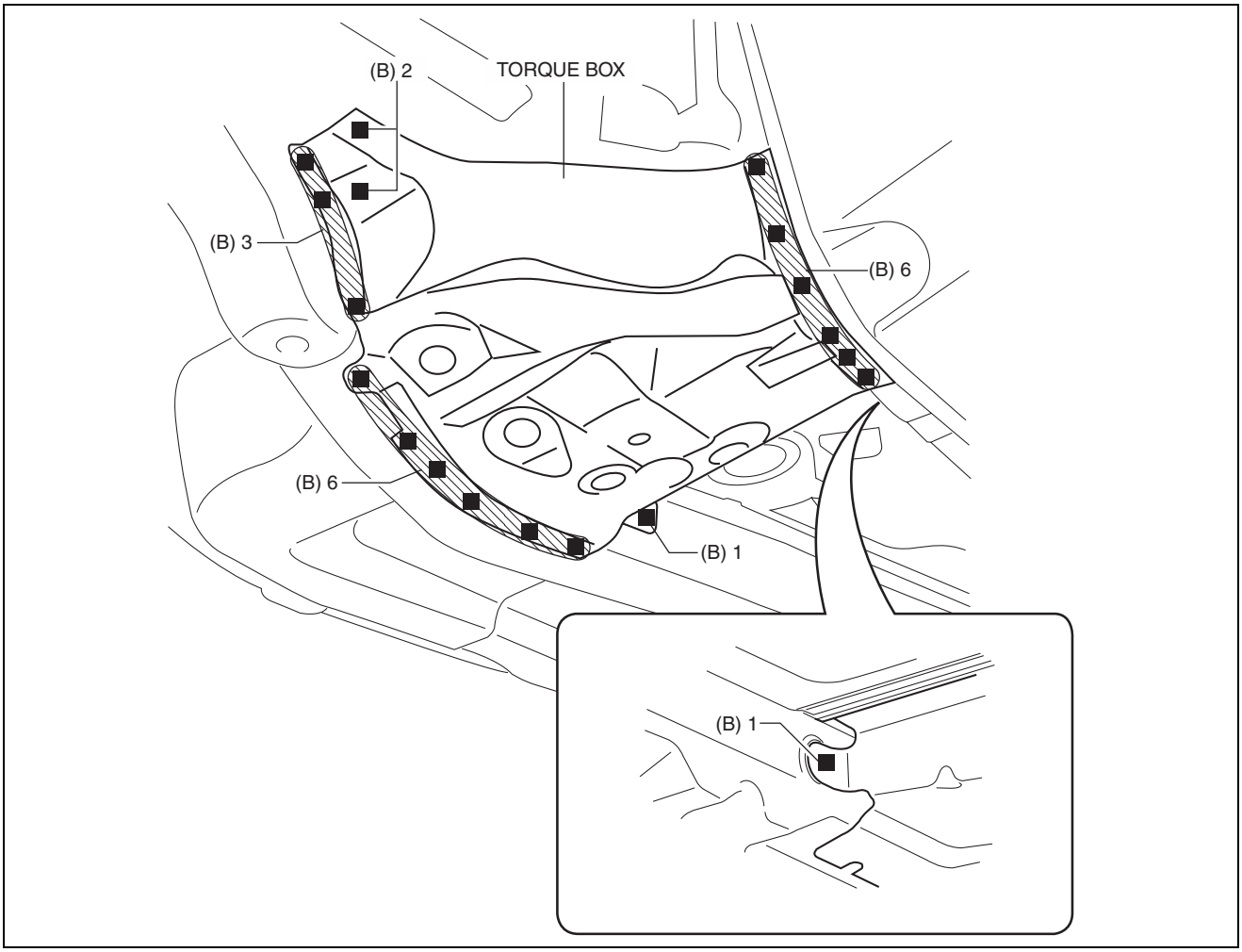

ac5wzb00000059

BODY STRUCTURE [PANEL REPLACEMENT]

FRONT FRAME (REAR) REMOVAL [PANEL REPLACEMENT]

id098008742500

Symbol Mark

SYMBOL MARK	MEANING
●	SPOT WELDING

ac5wzb00000060

Removal Procedure

1. Drill the 33 locations shown in the figure.

Note

- When drilling, do not drill a hole all the way through or there could be a problem when installing the new part.

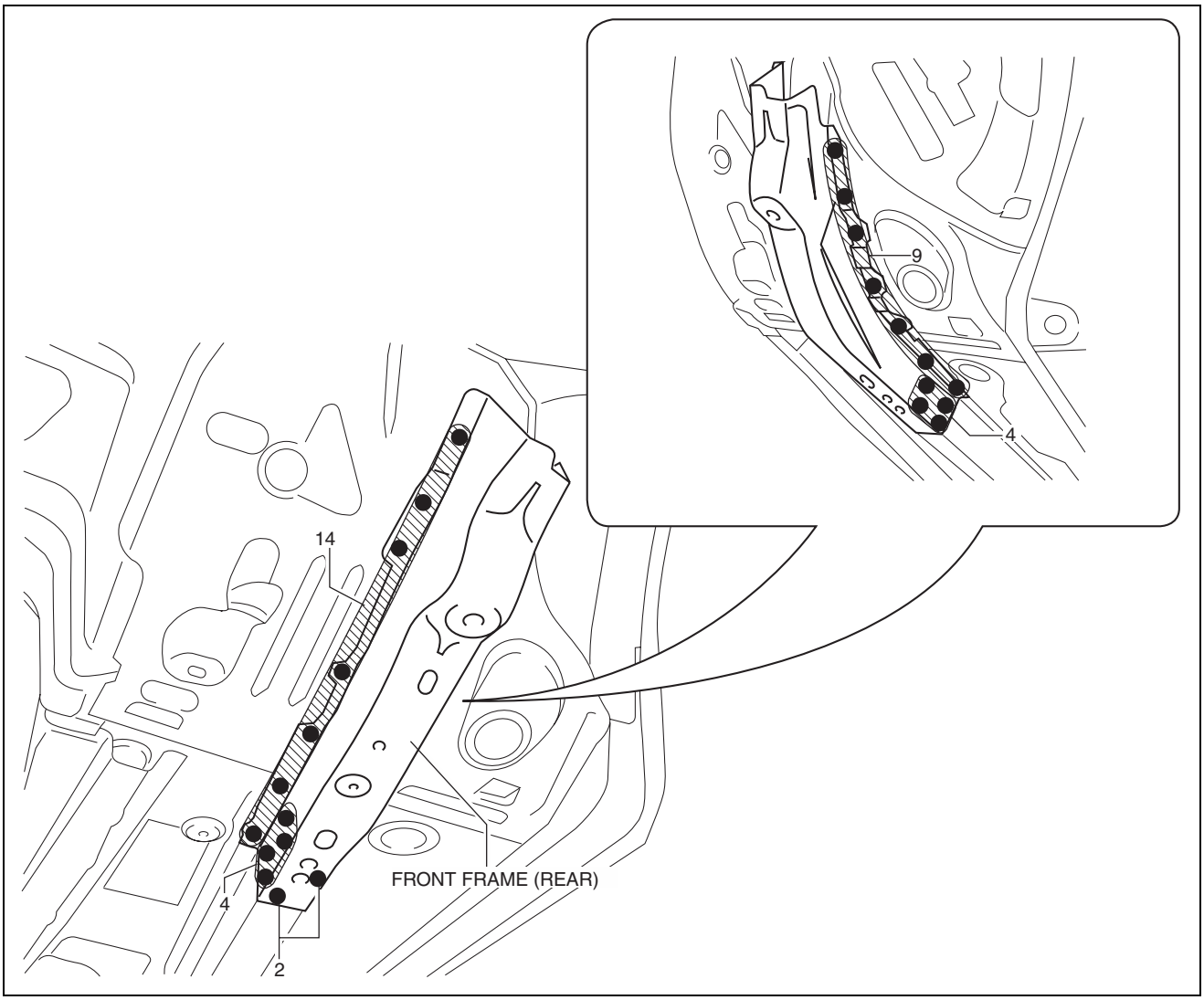

ac5uub00000052

2. Remove the front frame (rear).

BODY STRUCTURE [PANEL REPLACEMENT]

FRONT FRAME (REAR) INSTALLATION [PANEL REPLACEMENT]

id098008742600

Symbol Mark

SYMBOL MARK	MEANING
■	PLUG WELDING (ARC WELDING)

ac5wzb00000219

Installation Procedure

1. When installing new parts, measure and adjust the body as necessary to conform with standard dimensions.
2. Drill holes for the plug welding before installing the new parts.
3. After temporarily installing new parts, make sure the related parts fit properly.
4. Plug weld the 33 locations shown in the figure, then install the front frame (rear).

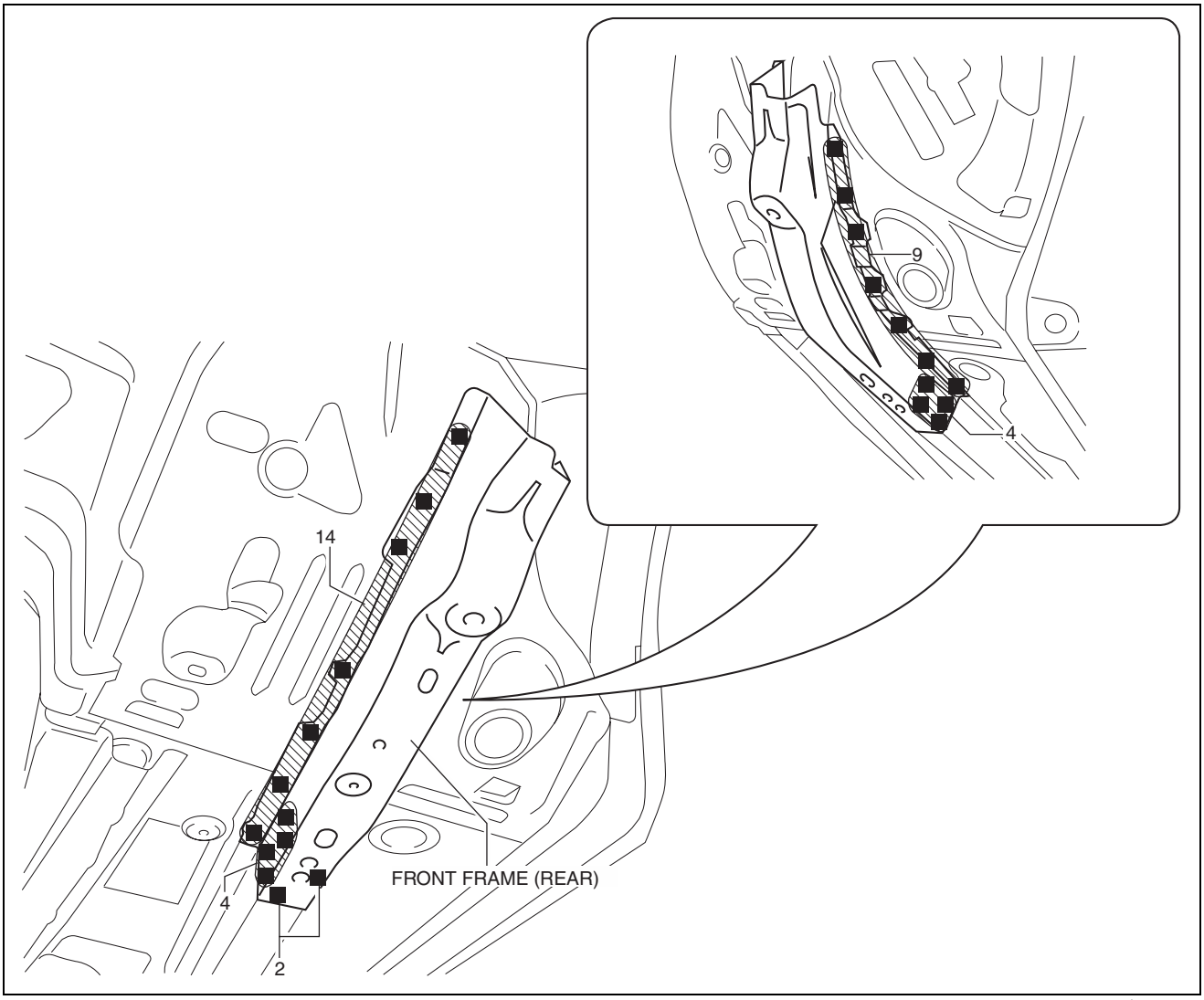

ac5uub00000053

SIDE MEMBER REMOVAL [PANEL REPLACEMENT]

id098008928100

Symbol Mark

SYMBOL MARK	MEANING
●	SPOT WELDING

ac5wzb00000064

BODY STRUCTURE [PANEL REPLACEMENT]

Removal Procedure

1. Drill the 45 locations shown in the figure.

Note

- When drilling, do not drill a hole all the way through or there could be a problem when installing the new part.

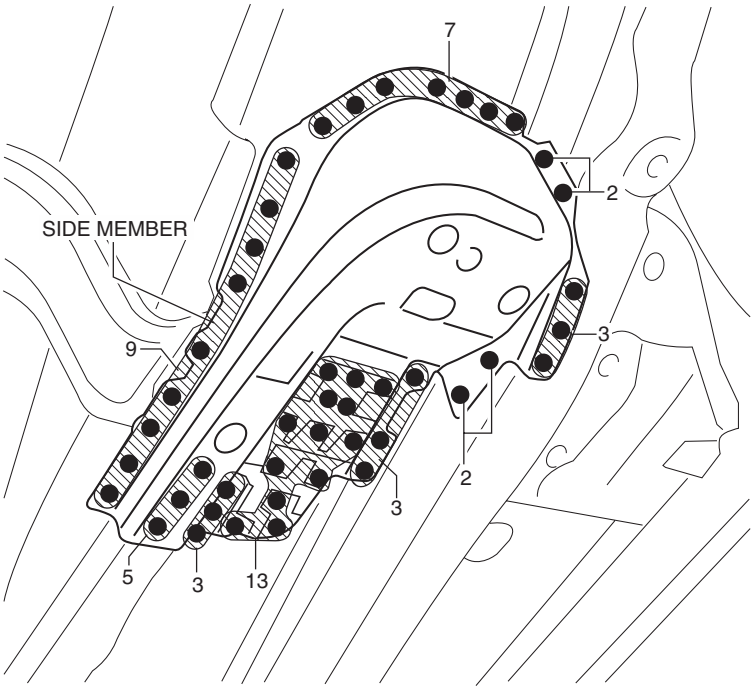

ac5uub00000054

2. Remove the side member.

SIDE MEMBER INSTALLATION [PANEL REPLACEMENT]

id098008928200

Symbol Mark

SYMBOL MARK	MEANING
■	PLUG WELDING (ARC WELDING)

ac5wzb00000223

Installation Procedure

1. When installing new parts, measure and adjust the body as necessary to conform with standard dimensions.
2. Drill holes for the plug welding before installing the new parts.
3. After temporarily installing new parts, make sure the related parts fit properly.
4. Plug weld the 45 locations shown in the figure, then install the side member.

BODY STRUCTURE [PANEL REPLACEMENT]

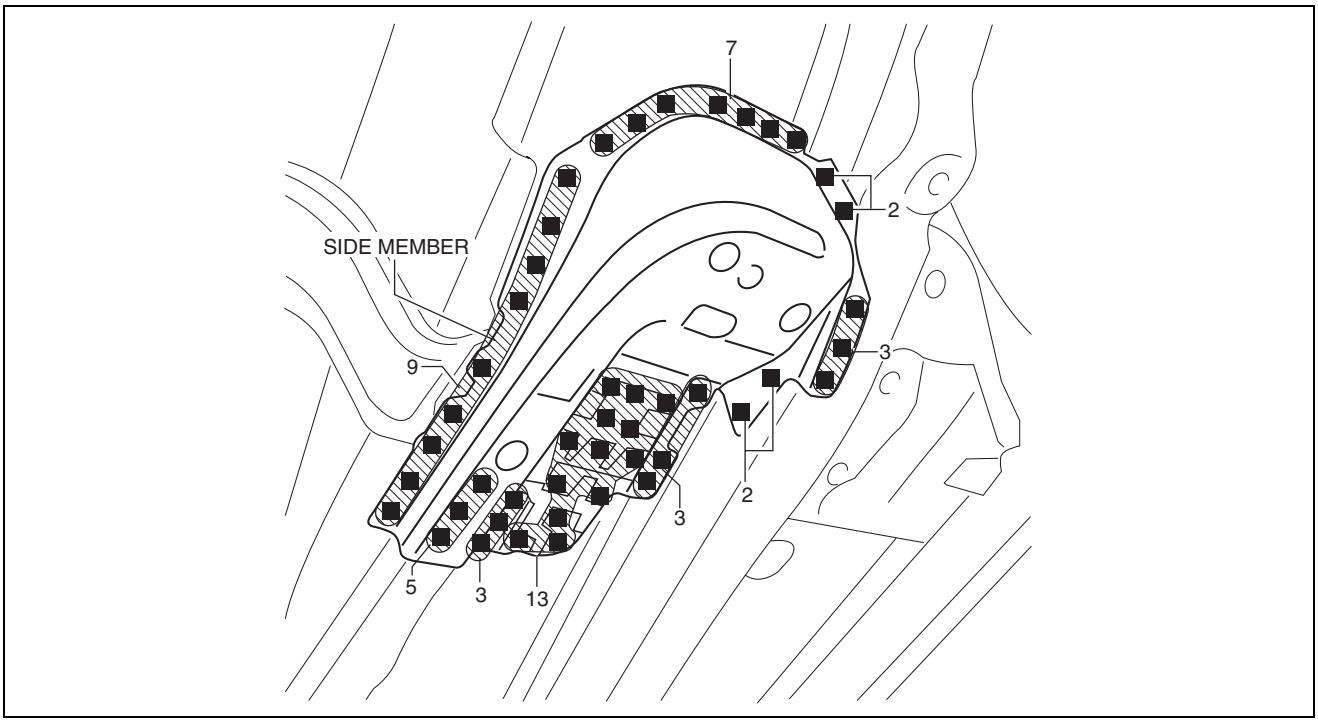

ac5uub00000055

FRONT PILLAR REMOVAL [PANEL REPLACEMENT]

id098008744700

Symbol Mark

SYMBOL MARK	MEANING
●	SPOT WELDING
⎍	ROUGH CUT LOCATION

ac5wzb00000068

Removal Procedure

Caution

- **Remove the curtain air bag module to prevent damage before servicing.**

BODY STRUCTURE [PANEL REPLACEMENT]

Front-side

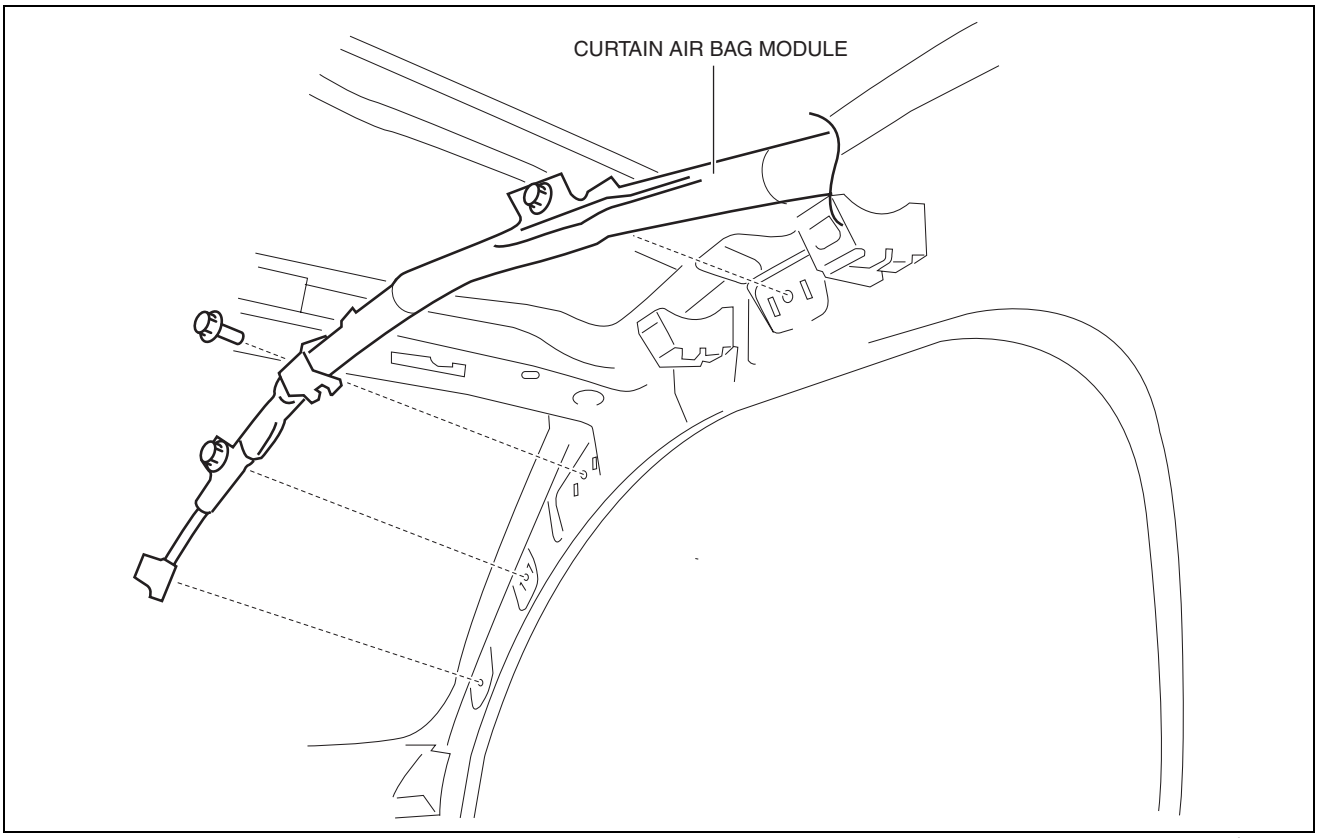

ac5wzb00000002

Rear-side

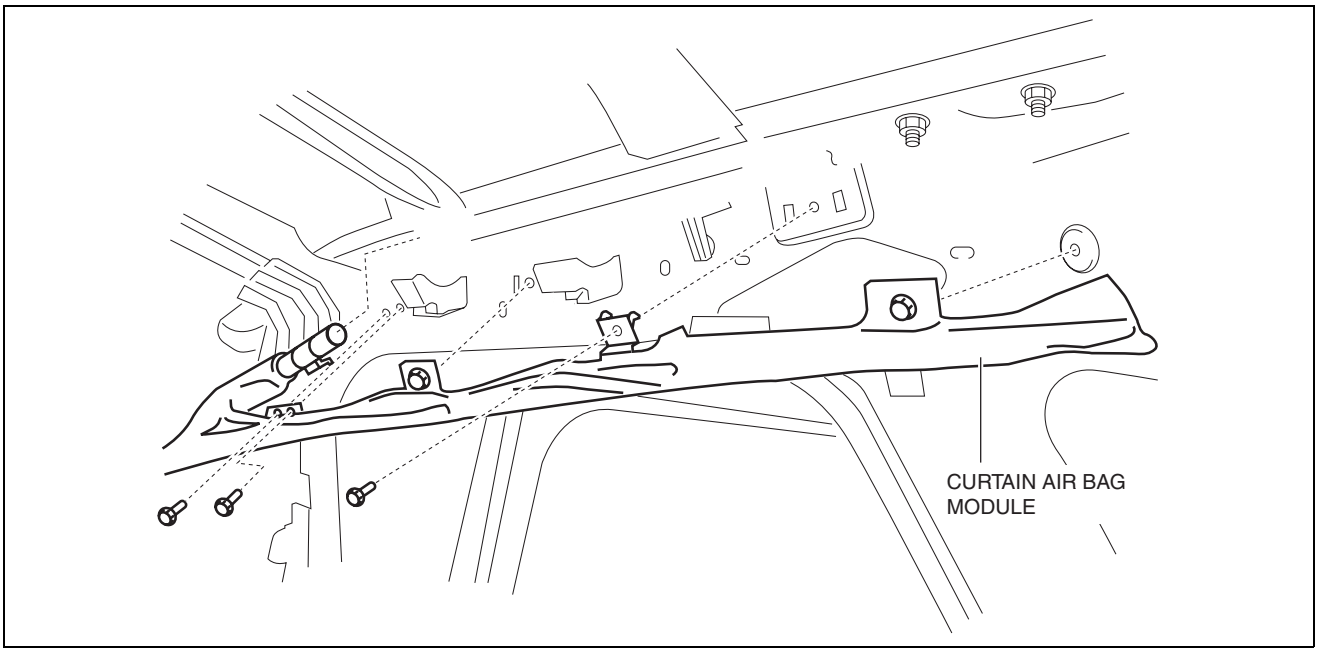

ac5wzb00000003

Caution

- **Avoid cutting with a blowtorch or similar tools as the insulator (shaded area) is flammable.**

BODY STRUCTURE [PANEL REPLACEMENT]

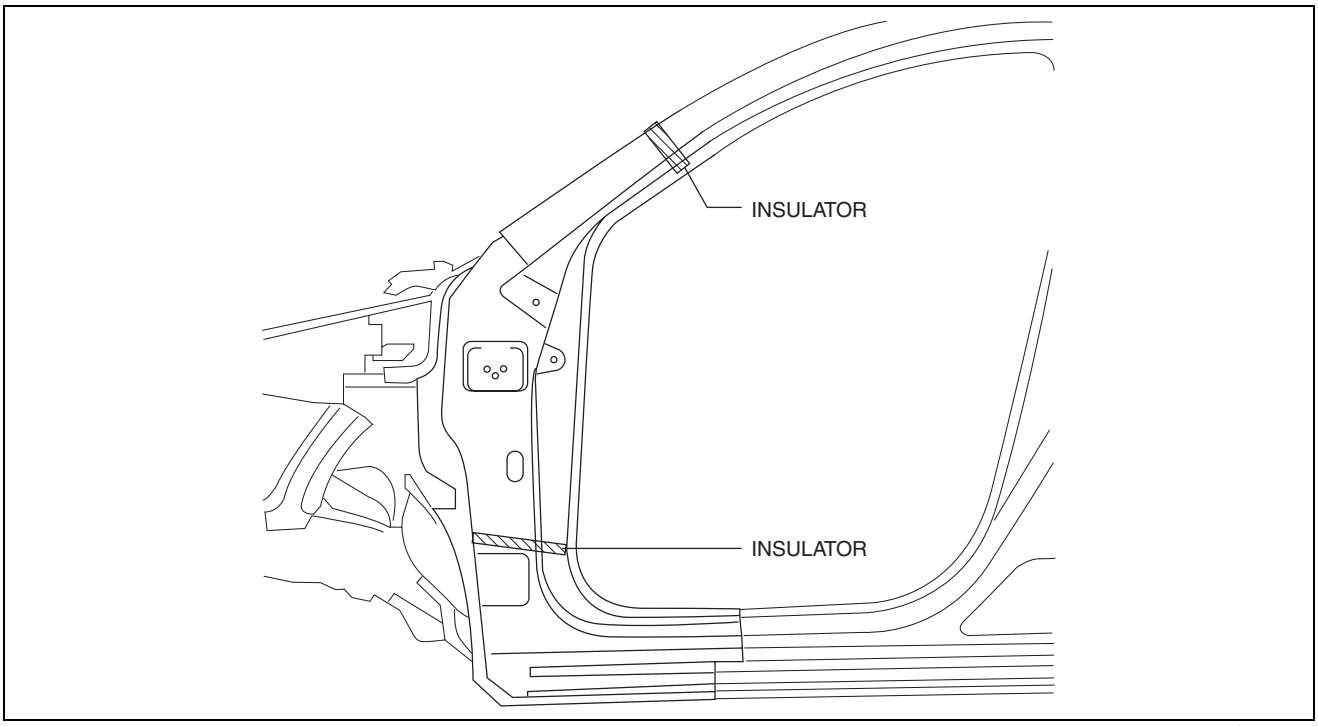

ac5wzb00000232

1. Rough cut the 2 locations indicated by (A) shown in the figure.
2. Drill the 82 locations indicated by (B) shown in the figure, then remove the cabin side outer frame (outer front pillar).

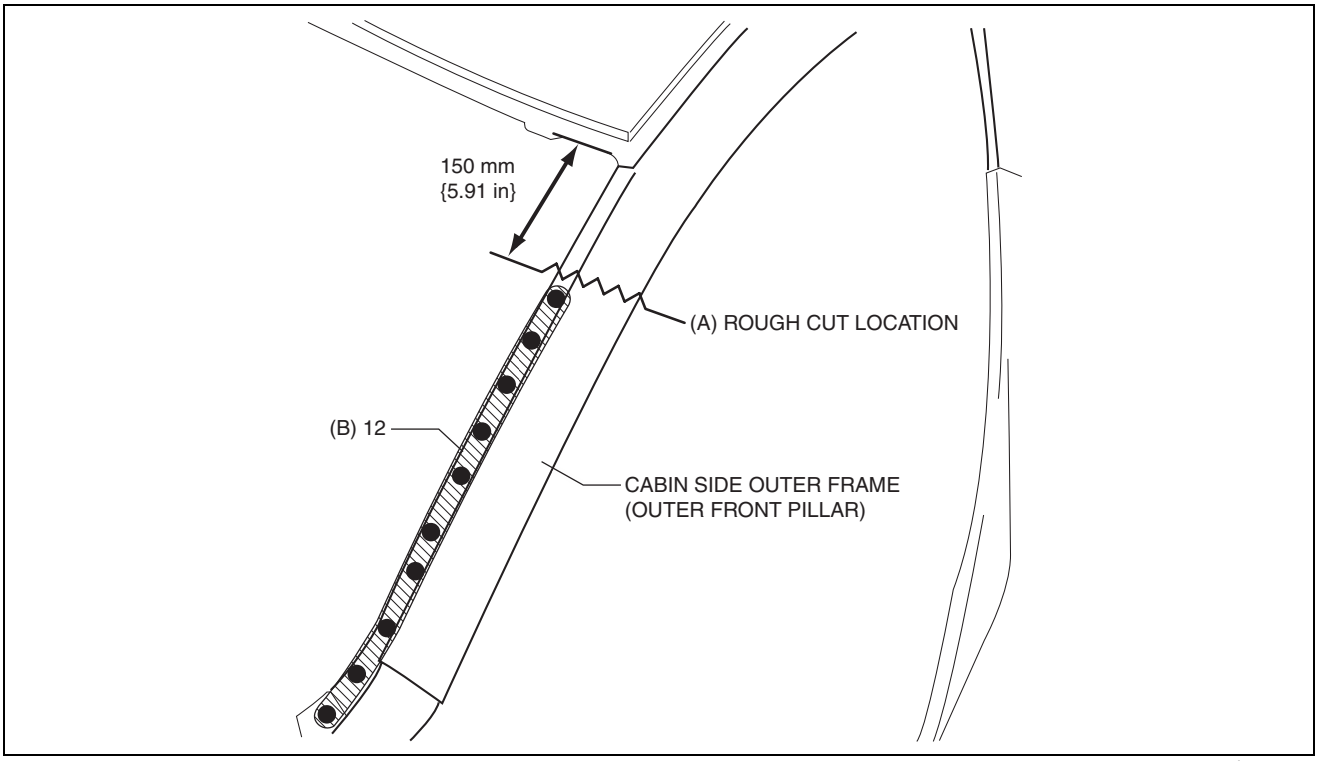

ac5wzb00000315

BODY STRUCTURE [PANEL REPLACEMENT]

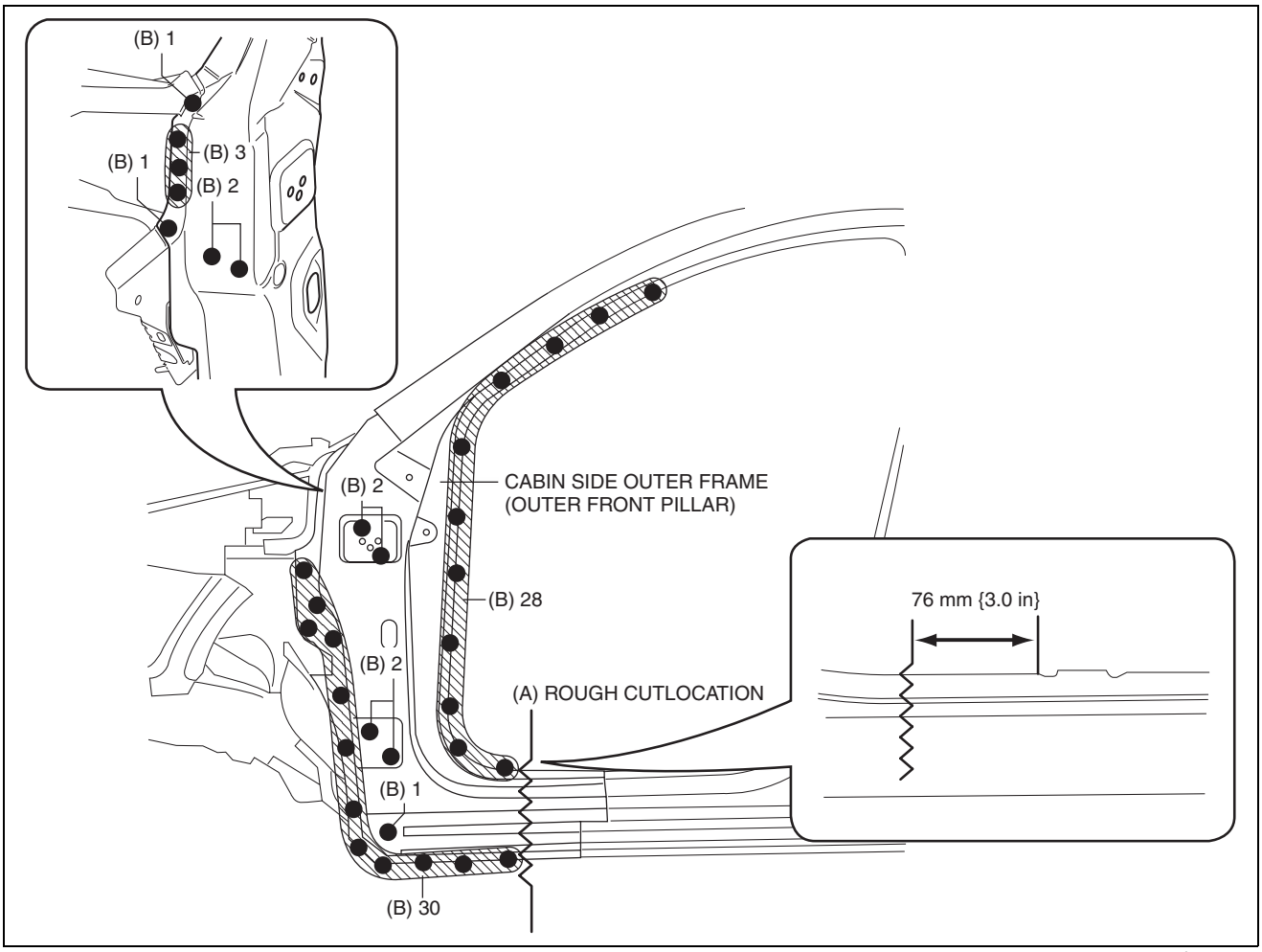

ac5wzb00000316

3. Rough cut area location indicated by (C) shown in the figure.
4. Drill the 7 locations indicated by (D) shown in the figure, then remove the front pillar reinforcement and front pillar inner reinforcement as a single unit.

Note

- When removing the front pillar reinforcement and the front pillar inner reinforcement separately, drill the 11 locations indicated by (E) shown in the figure.

BODY STRUCTURE [PANEL REPLACEMENT]

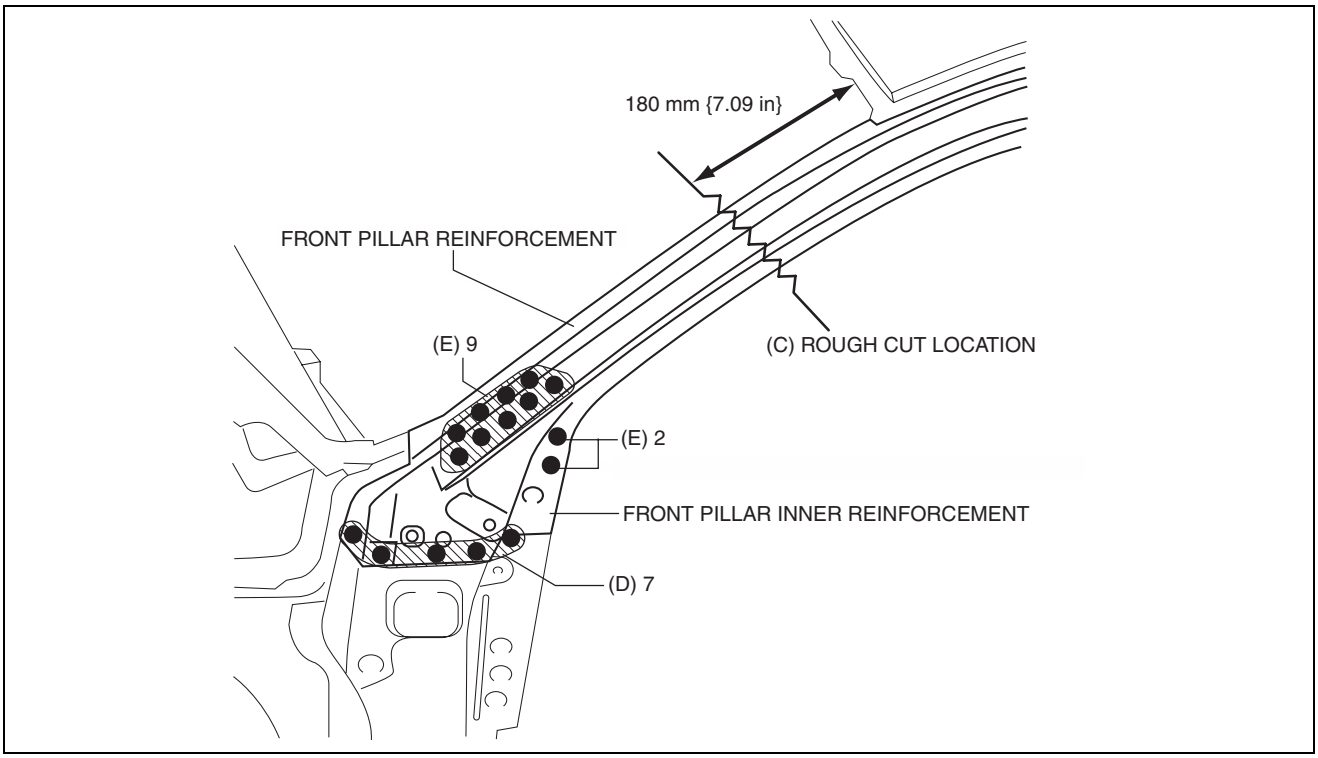

ac5wzb00000317

5. Drill the 9 locations indicated by (F) shown in the figure, then remove the upper hinge reinforcement.

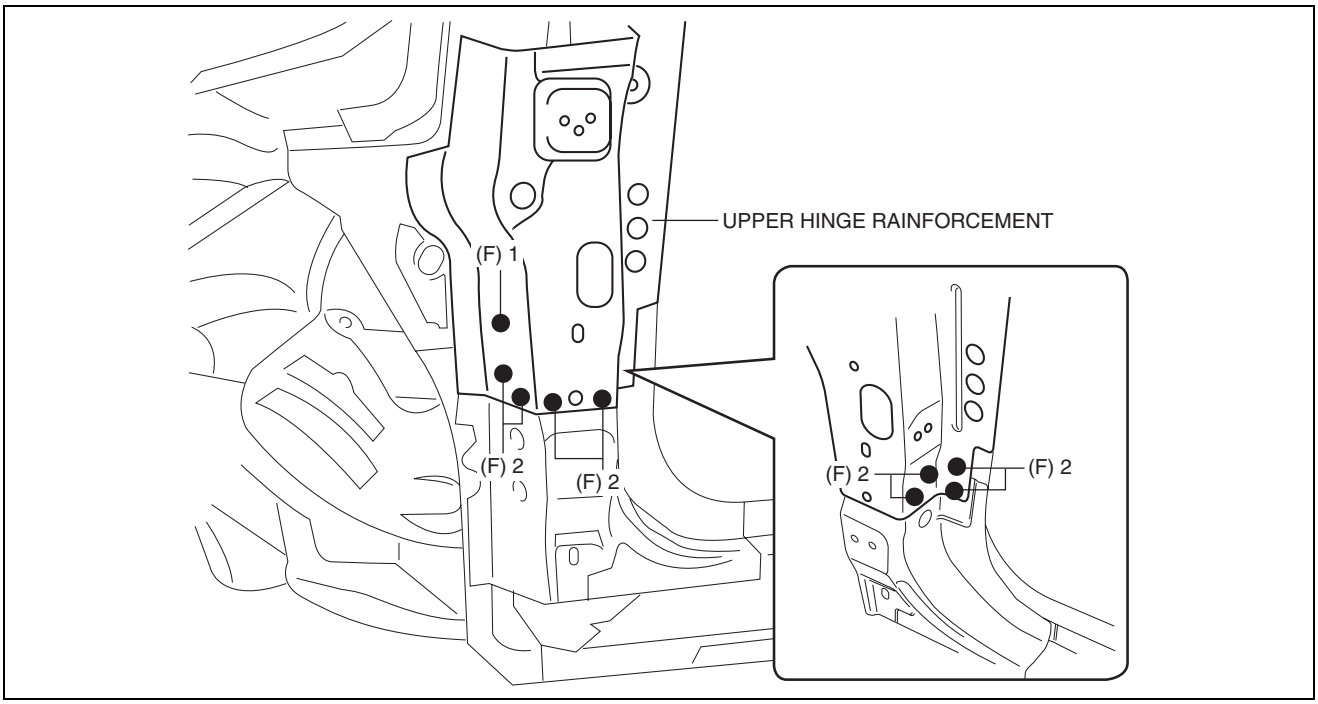

ac5uub00000059

6. Drill the 4 locations indicated by (G) from the inside shown in the figure.
7. Drill the 11 locations indicated by (H) shown in the figure.

BODY STRUCTURE [PANEL REPLACEMENT]

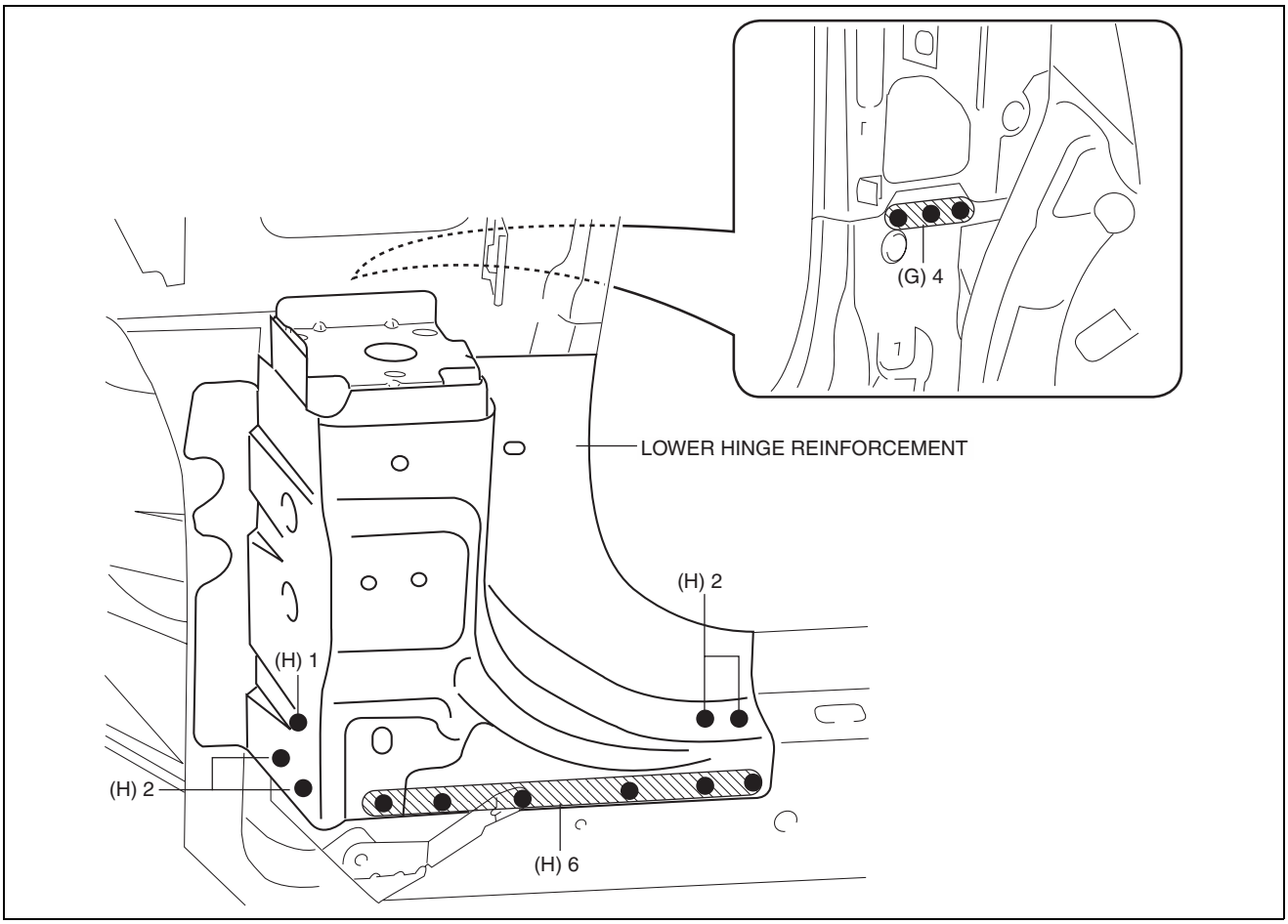

ac5uub00000060

8. Drill the 1 location indicated by (I) shown in the figure, while peeling back the lower hinge reinforcement, then remove it.

BODY STRUCTURE [PANEL REPLACEMENT]

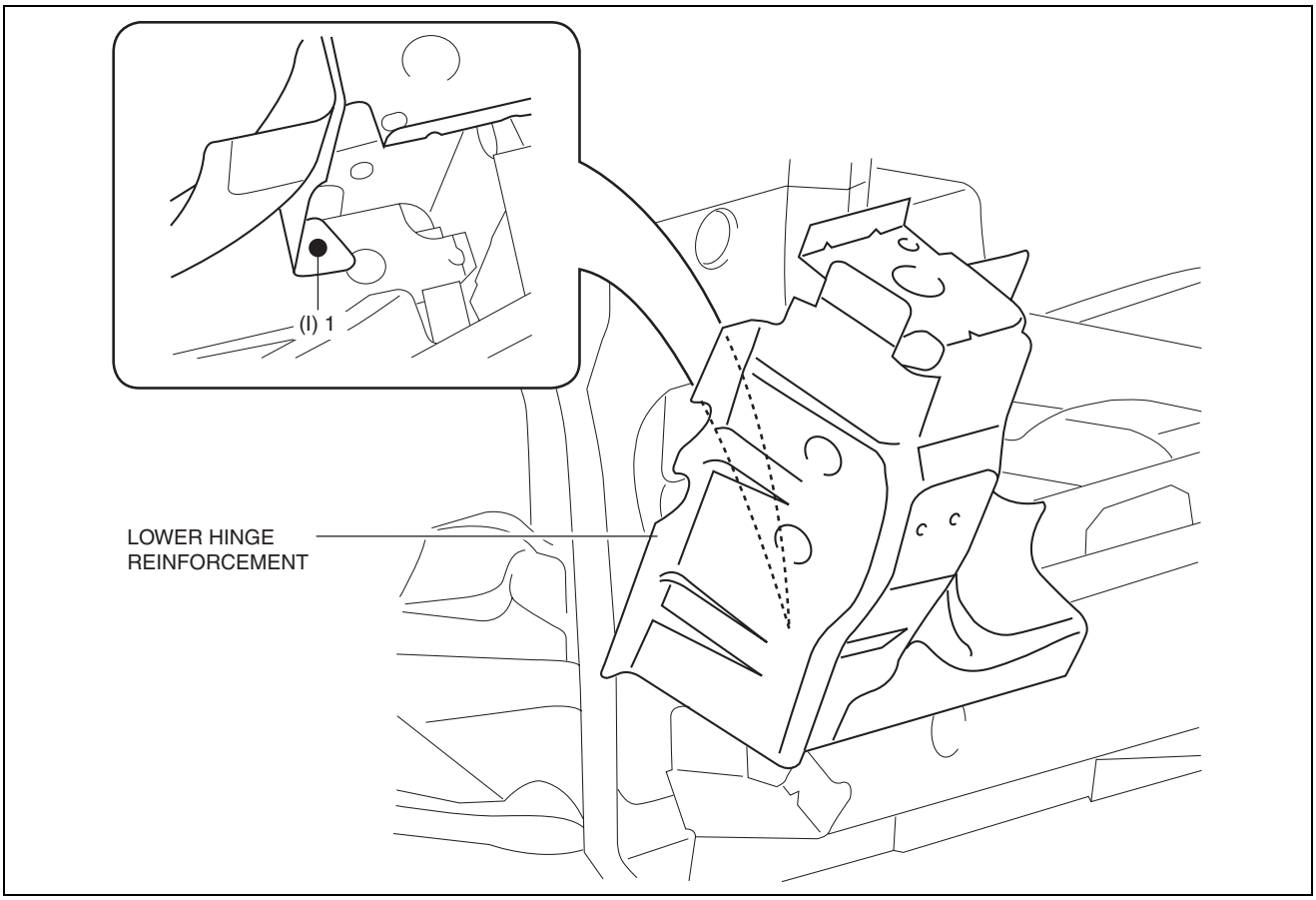

ac5wzb00000318

9. Drill the 20 locations indicated by (J) shown in the figure, then remove the inner hinge pillar.

BODY STRUCTURE [PANEL REPLACEMENT]

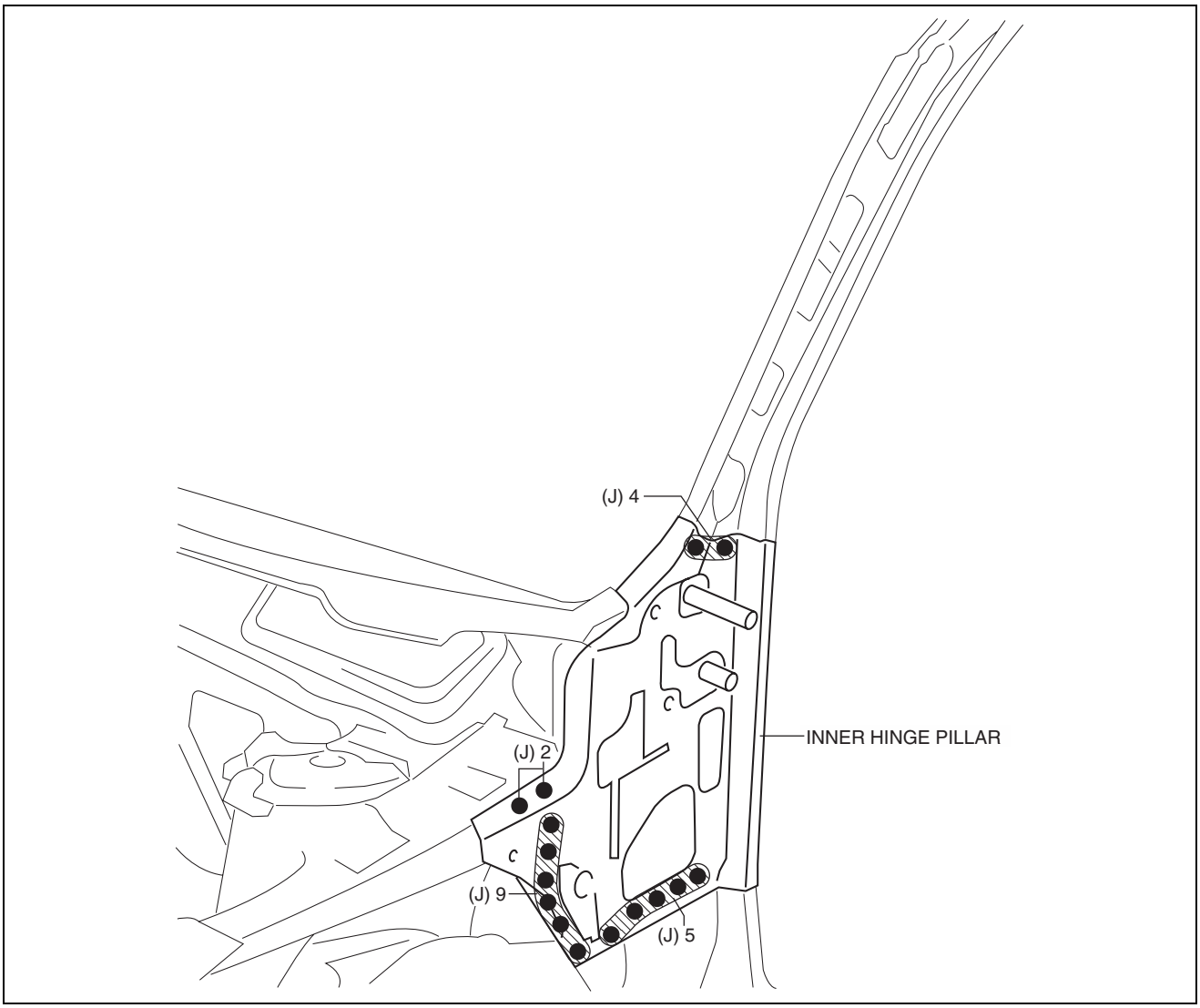

ac5wzb00000319

10. Rough cut the area location indicated by (K) shown in the figure.

BODY STRUCTURE [PANEL REPLACEMENT]

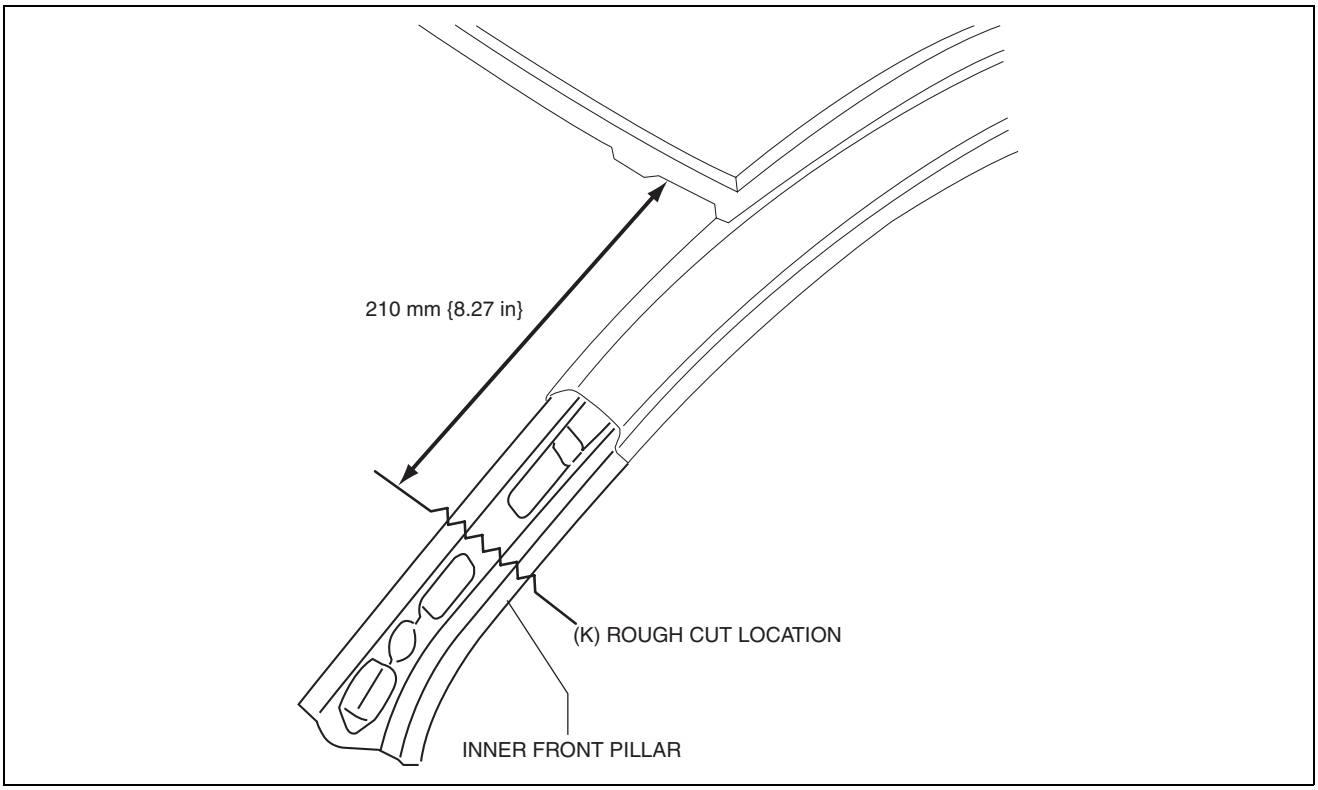

ac5wzb00000286

11. Remove the inner front pillar.

FRONT PILLAR INSTALLATION [PANEL REPLACEMENT]

id098008744800

Symbol Mark

SYMBOL MARK	MEANING
■	PLUG WELDING (ARC WELDING)
⎽⎽⎽/\/\/\/\/\/\/\/\/\/\/\/\/\/\/\/\/\/\/\/⎽⎽⎽	ROUGH CUT LOCATION
⎽⎽⎽HHHH

BODY STRUCTURE [PANEL REPLACEMENT]

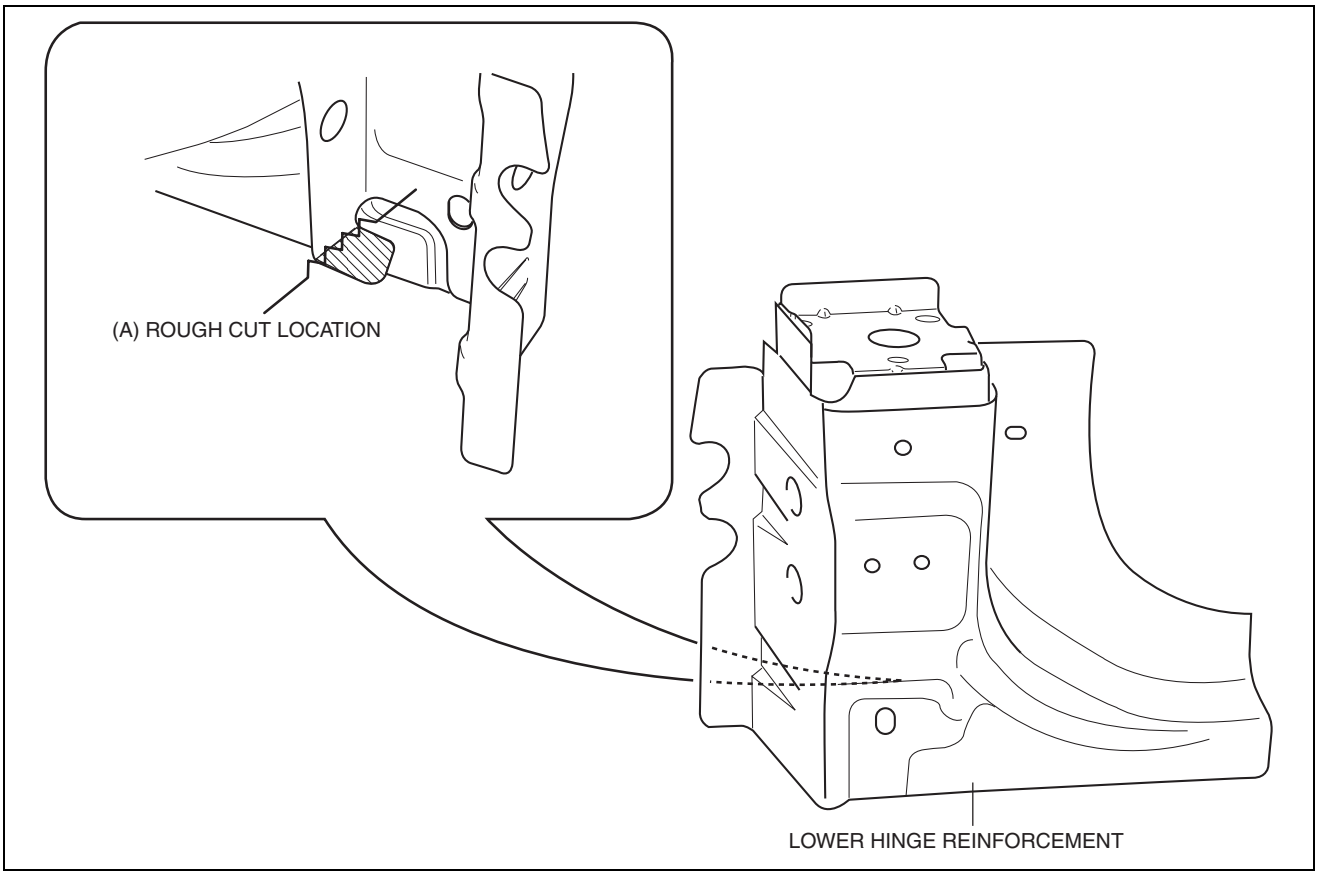

ac5wzb00000287

5. Cut and join the area location indicated by (B) shown in the figure, then install the inner front pillar.

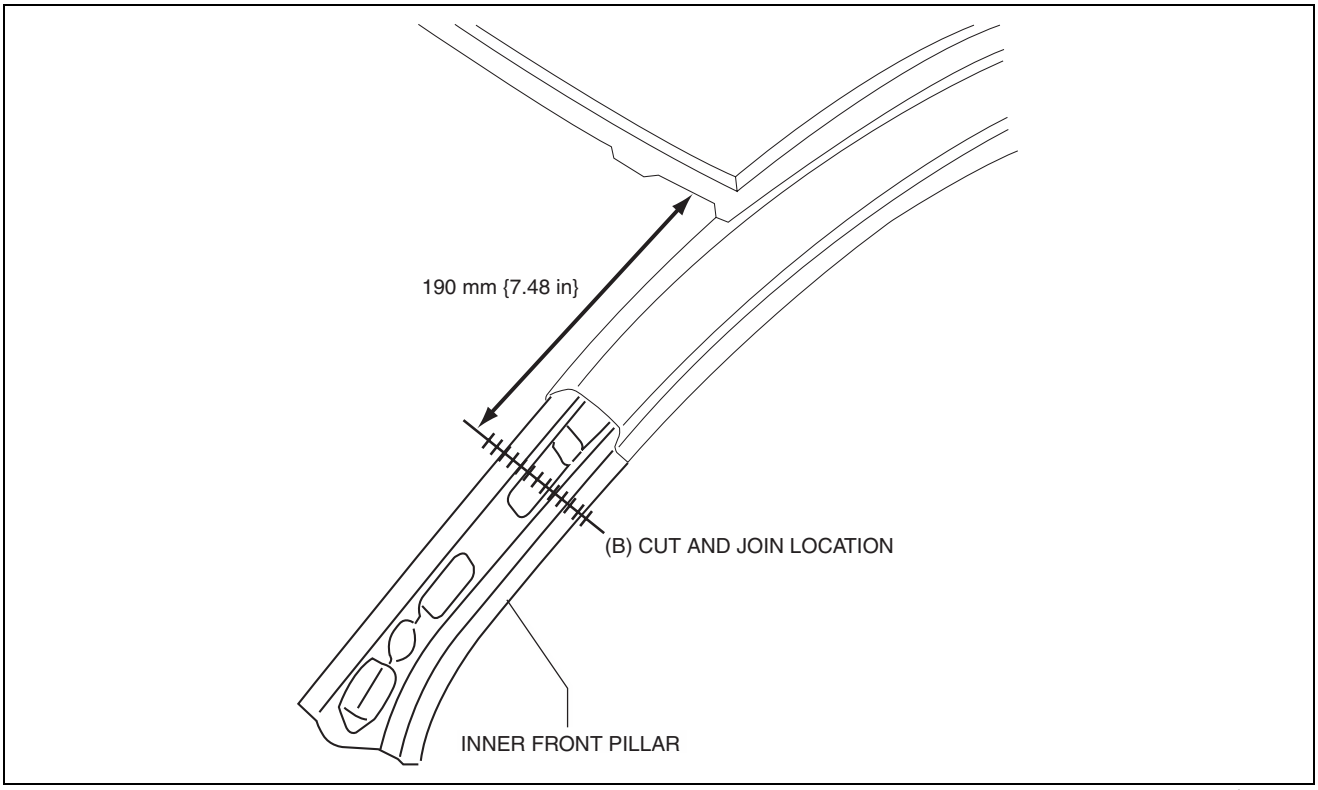

ac5wzb00000288

6. Plug weld the 20 locations indicated by (C) shown in the figure, then install the inner hinge pillar.

BODY STRUCTURE [PANEL REPLACEMENT]

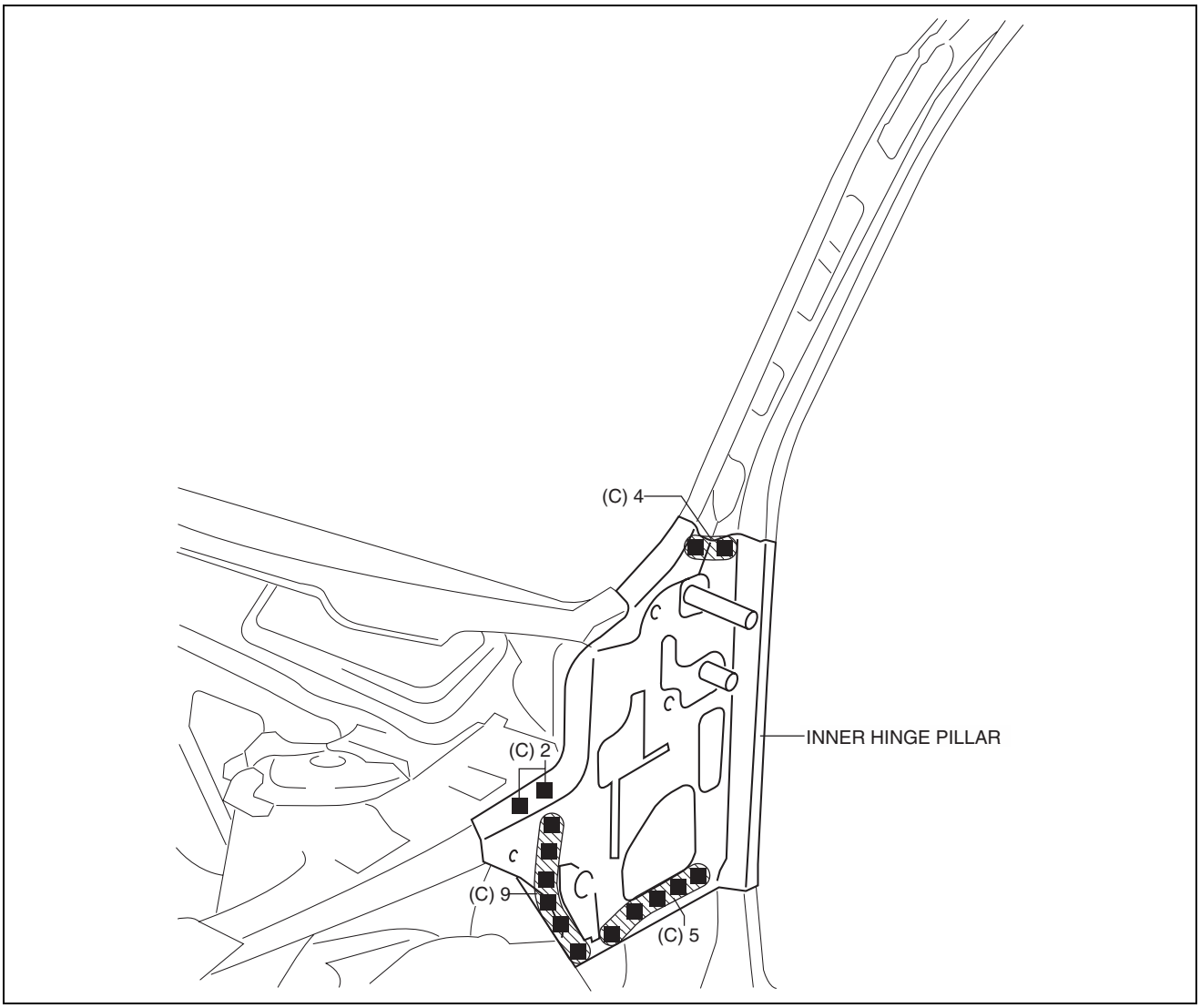

ac5uub00000062

7. Plug weld the 4 locations indicated by (D) from the inside shown in the figure.
8. Plug weld the 11 locations indicated by (E) shown in the figure, then install the lower hinge reinforcement.

BODY STRUCTURE [PANEL REPLACEMENT]

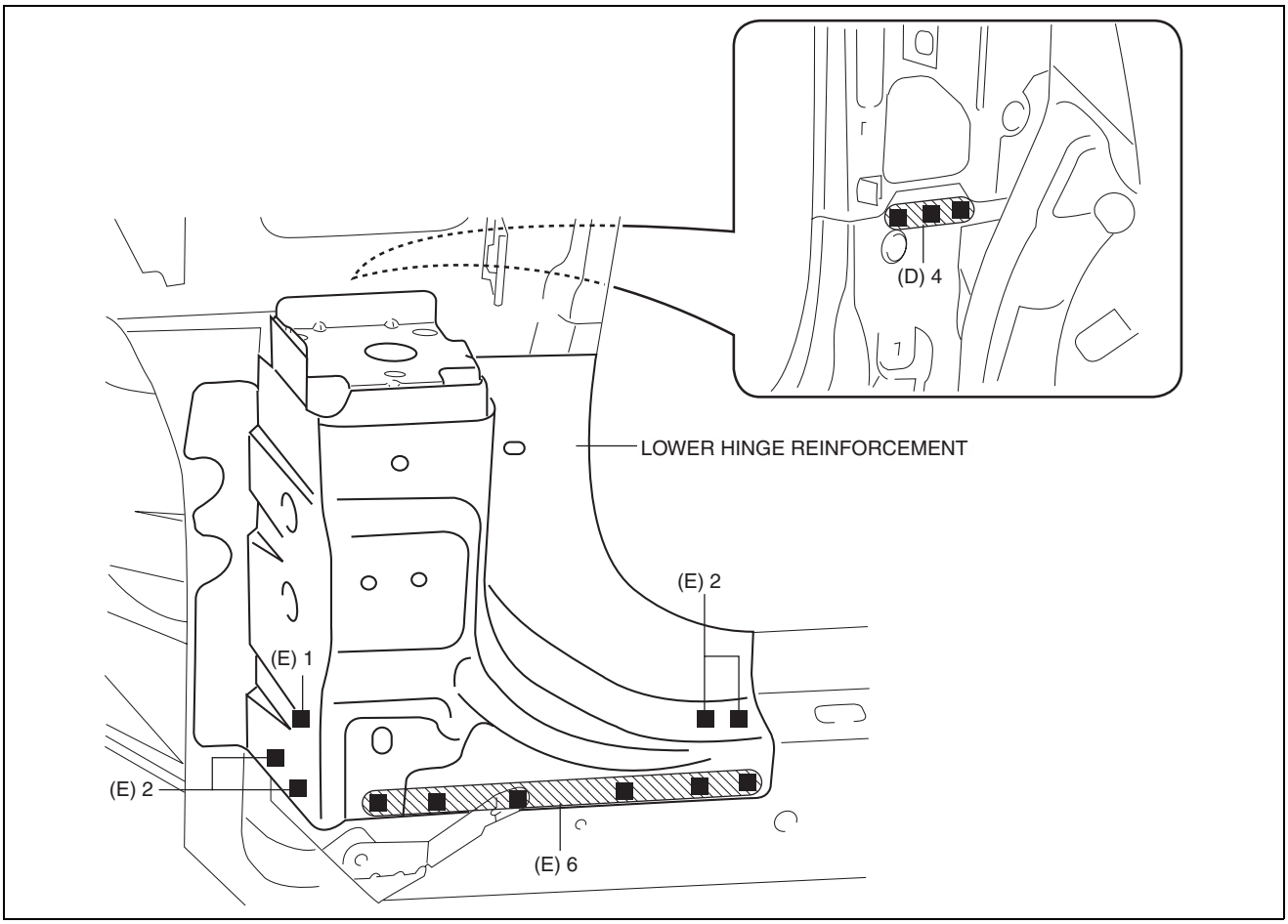

ac5uub00000063

9. Plug weld the 9 locations indicated by (F) shown in the figure, then install the upper hinge reinforcement.

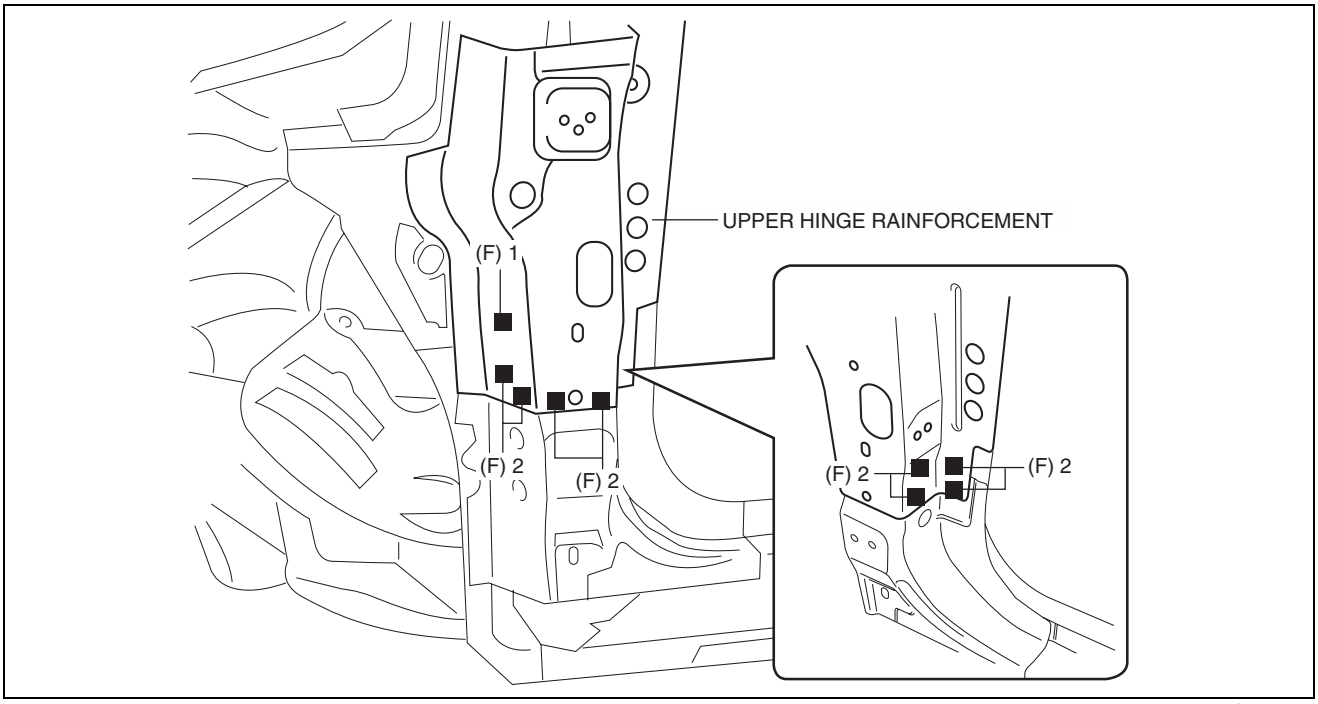

ac5uub00000064

10. Cut and join the area location indicated by (G) shown in the figure.
11. Plug weld the 7 locations indicated by (H) shown in the figure, then install the front pillar reinforcement and front pillar inner reinforcement as a single unit.

BODY STRUCTURE [PANEL REPLACEMENT]

Note

- When installing the front pillar reinforcement and the front pillar inner reinforcement separately, plug weld the 11 locations indicated by (I) shown in the figure.

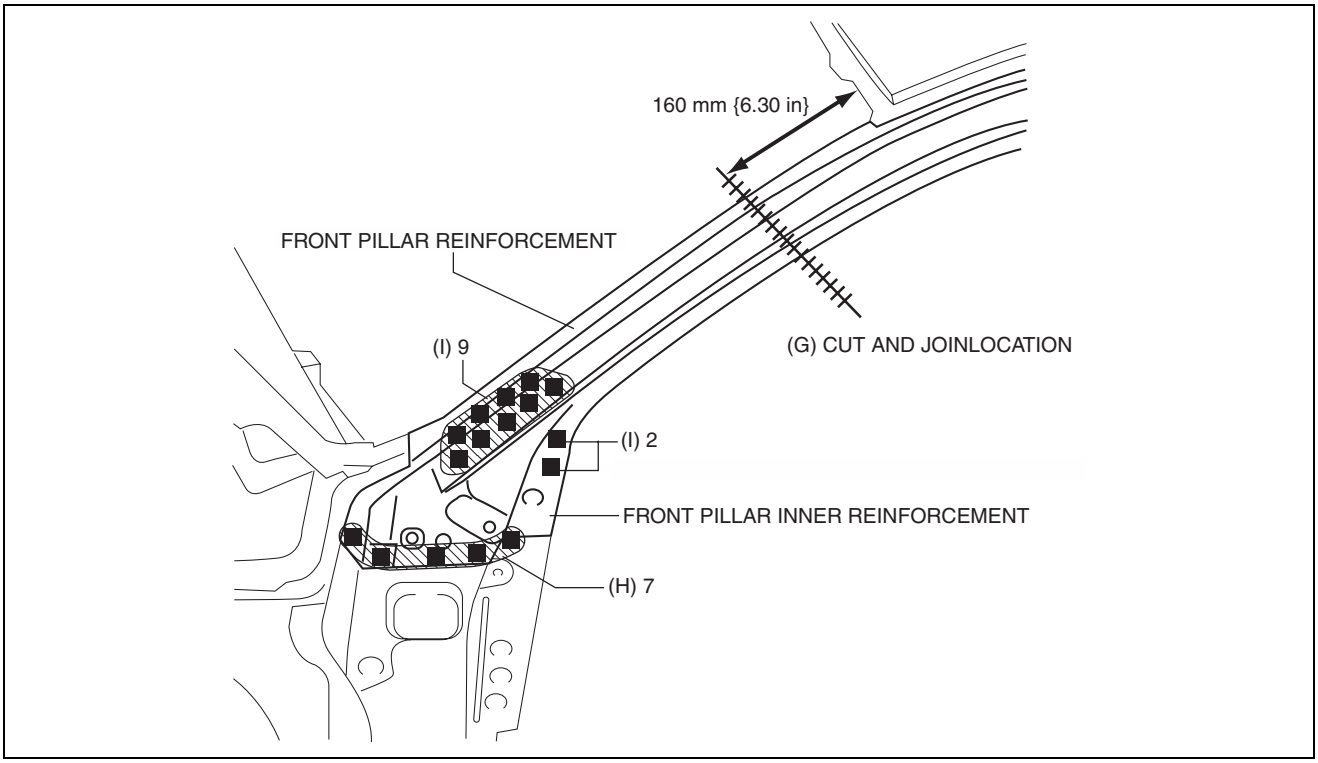

ac5uub00000065

12. Cut and join the 2 locations indicated by (J) shown in the figure.
13. Plug weld the 86 locations indicated by (K) shown in the figure, then install the cabin side outer frame (outer front pillar outer).

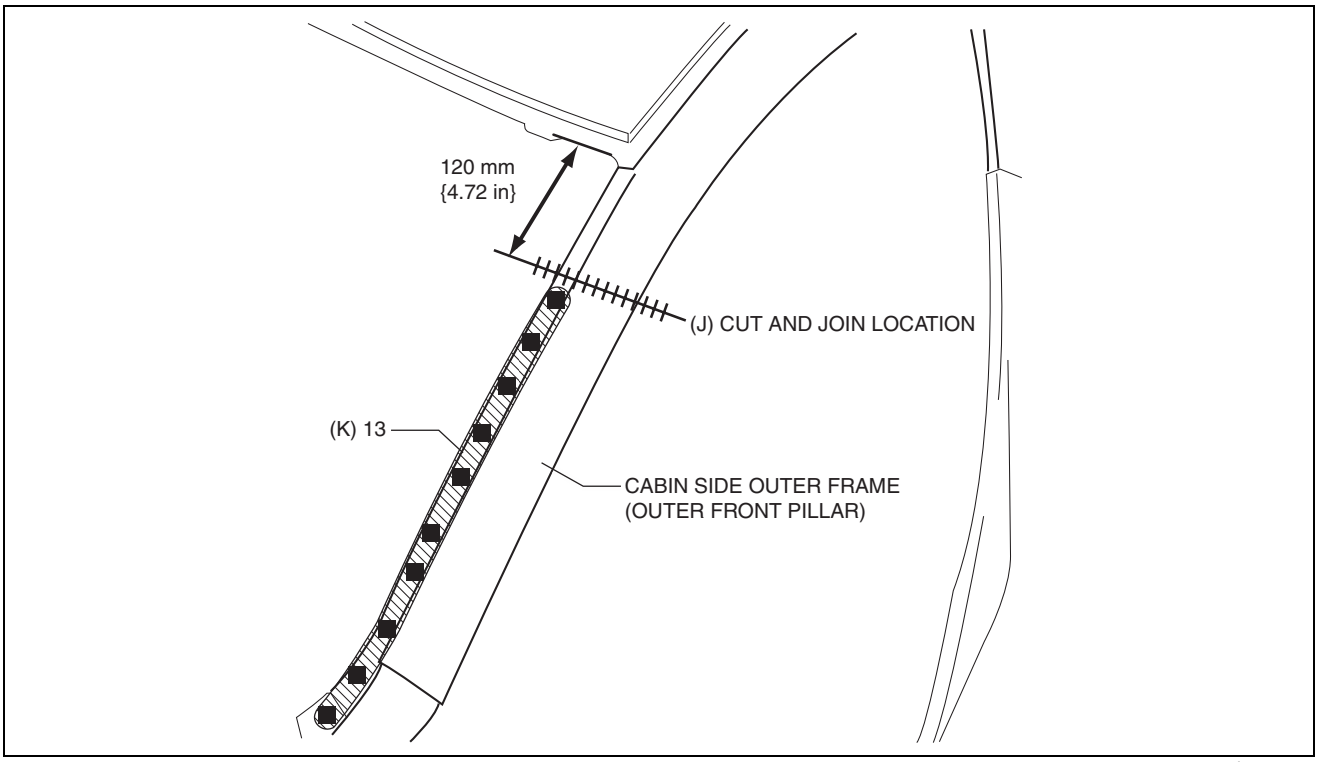

ac5wzb00000325

BODY STRUCTURE [PANEL REPLACEMENT]

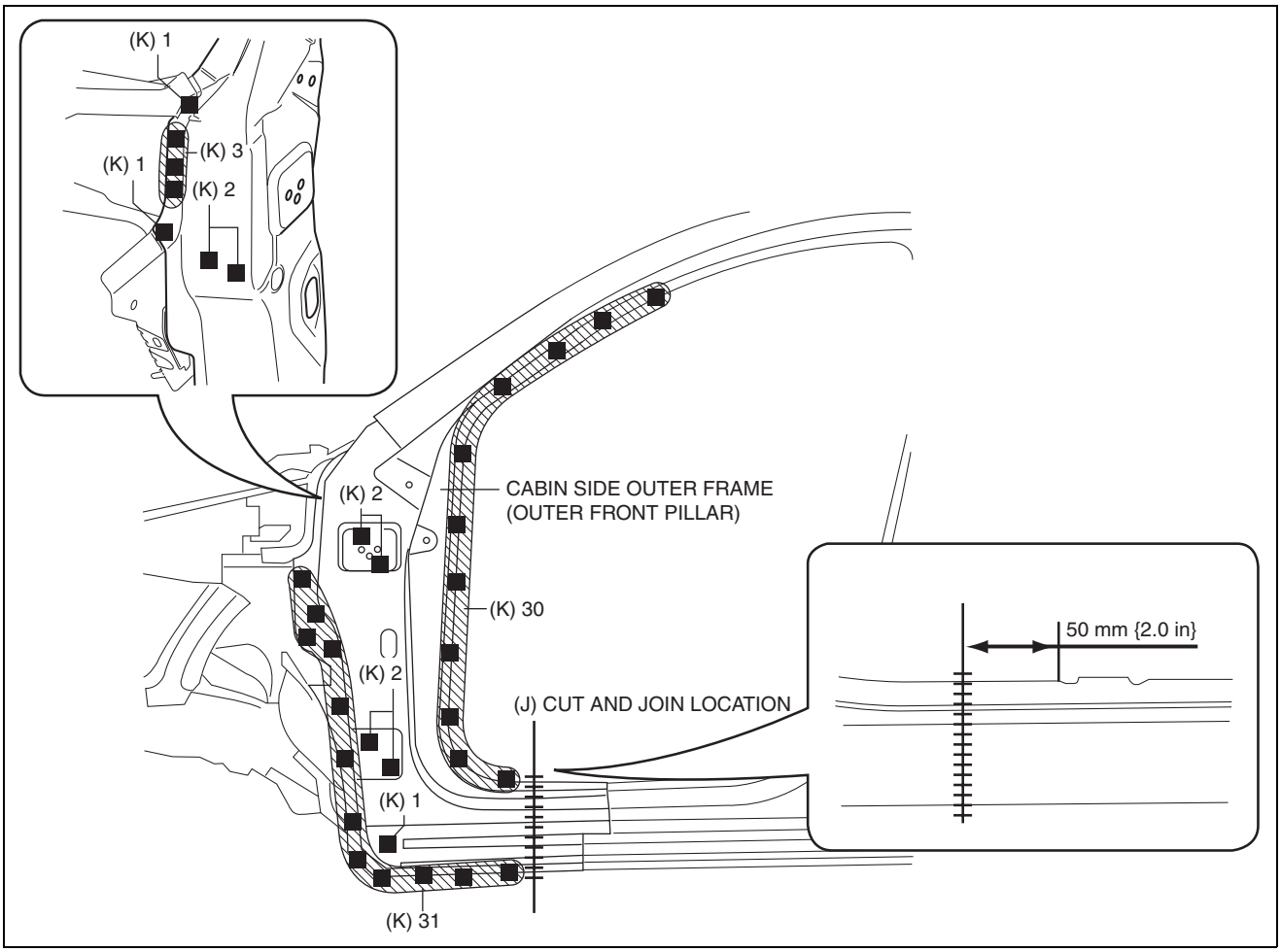

ac5wzb00000320

CENTER PILLAR REMOVAL [PANEL REPLACEMENT]

id098008743900

Symbol Mark

SYMBOL MARK	MEANING
●	SPOT WELDING
⁄⁄⁄⁄⁄⁄⁄⁄⁄⁄⁄⁄⁄⁄⁄⁄⁄⁄⁄⁄	ROUGH CUT LOCATION

ac5wzb00000001

Removal Procedure

Caution

- **Remove the curtain air bag module to prevent damage before servicing.**

BODY STRUCTURE [PANEL REPLACEMENT]

Front-side

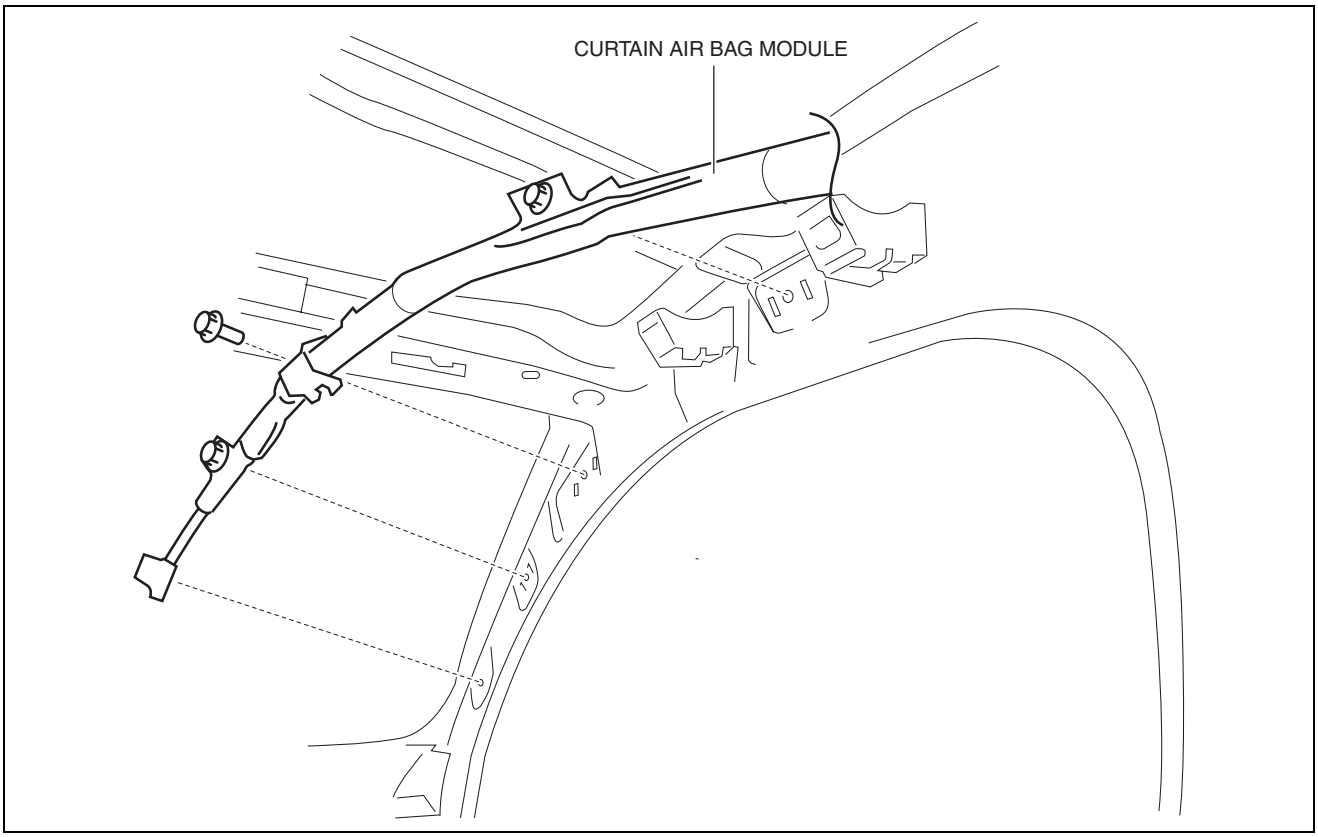

ac5wzb00000002

Rear-side

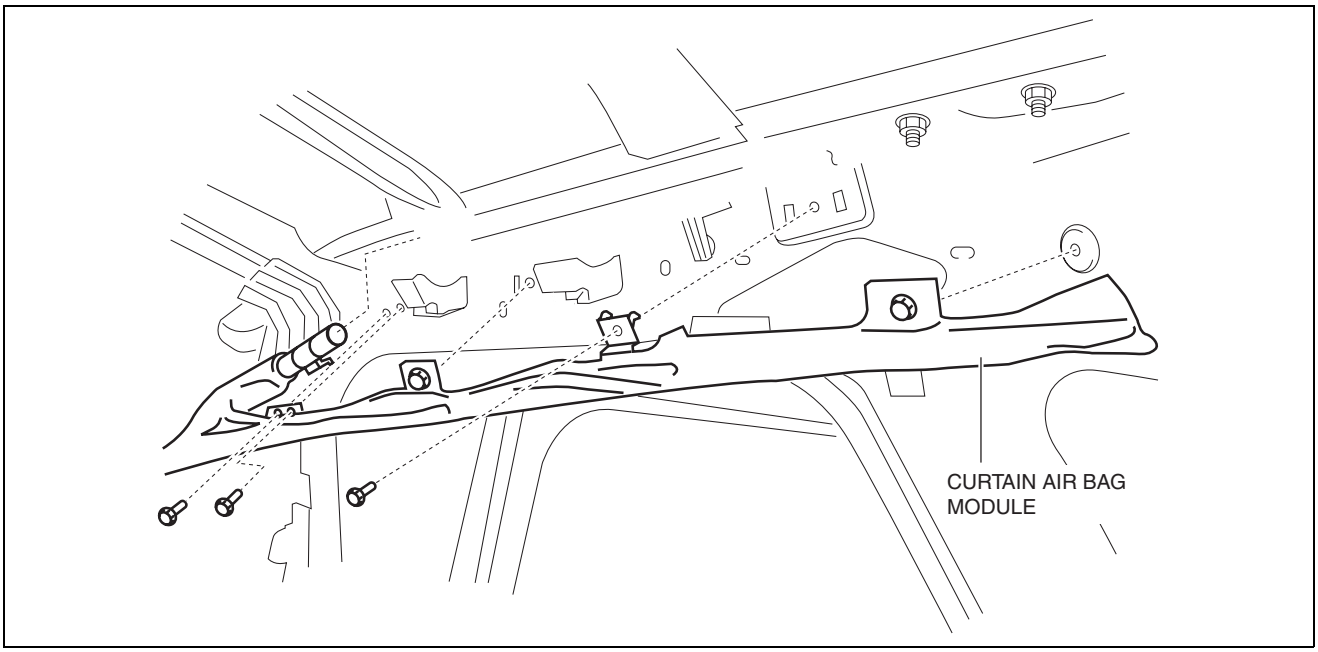

ac5wzb00000003

Caution

- **Avoid cutting with a blowtorch or similar tools as the insulator (shaded area) is flammable.**

BODY STRUCTURE [PANEL REPLACEMENT]

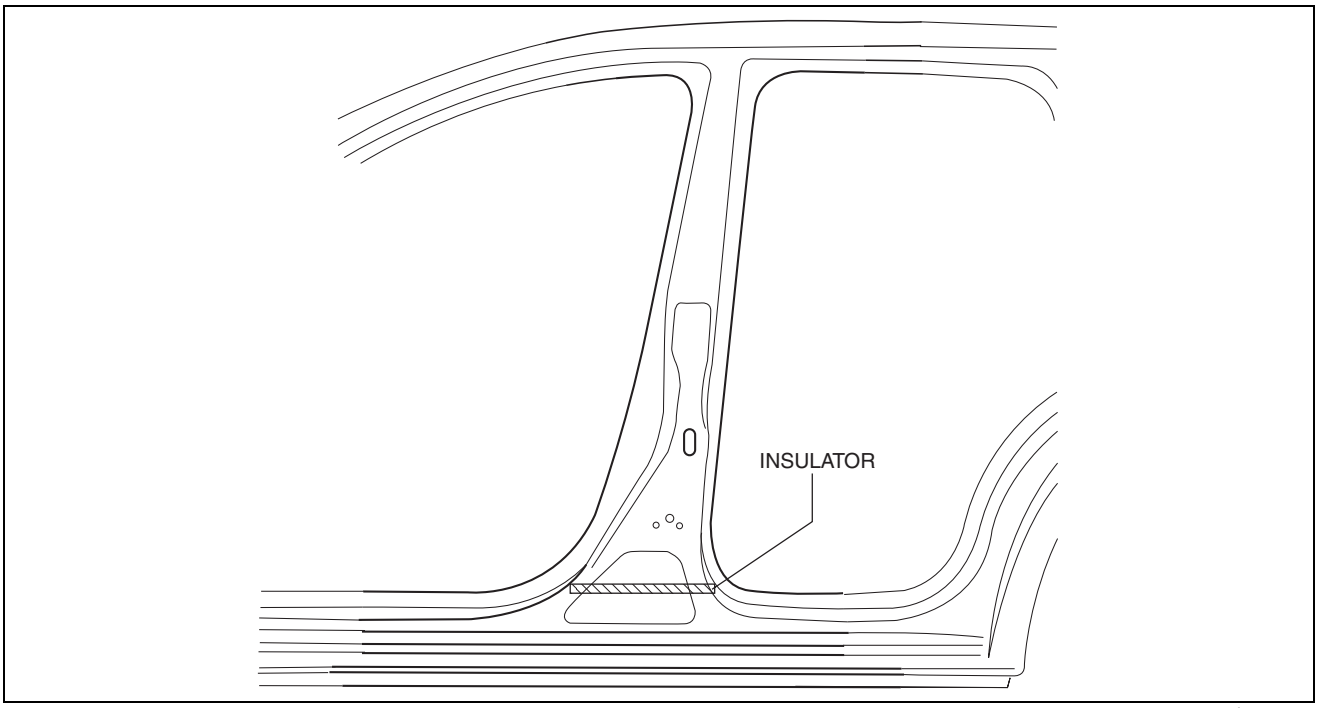

ac5wzb00000233

1. Rough cut the area locations indicated by (A).
2. Drill the 88 locations indicated by (B) shown in the figure then remove the cabin side outer frame (outer center pillar).

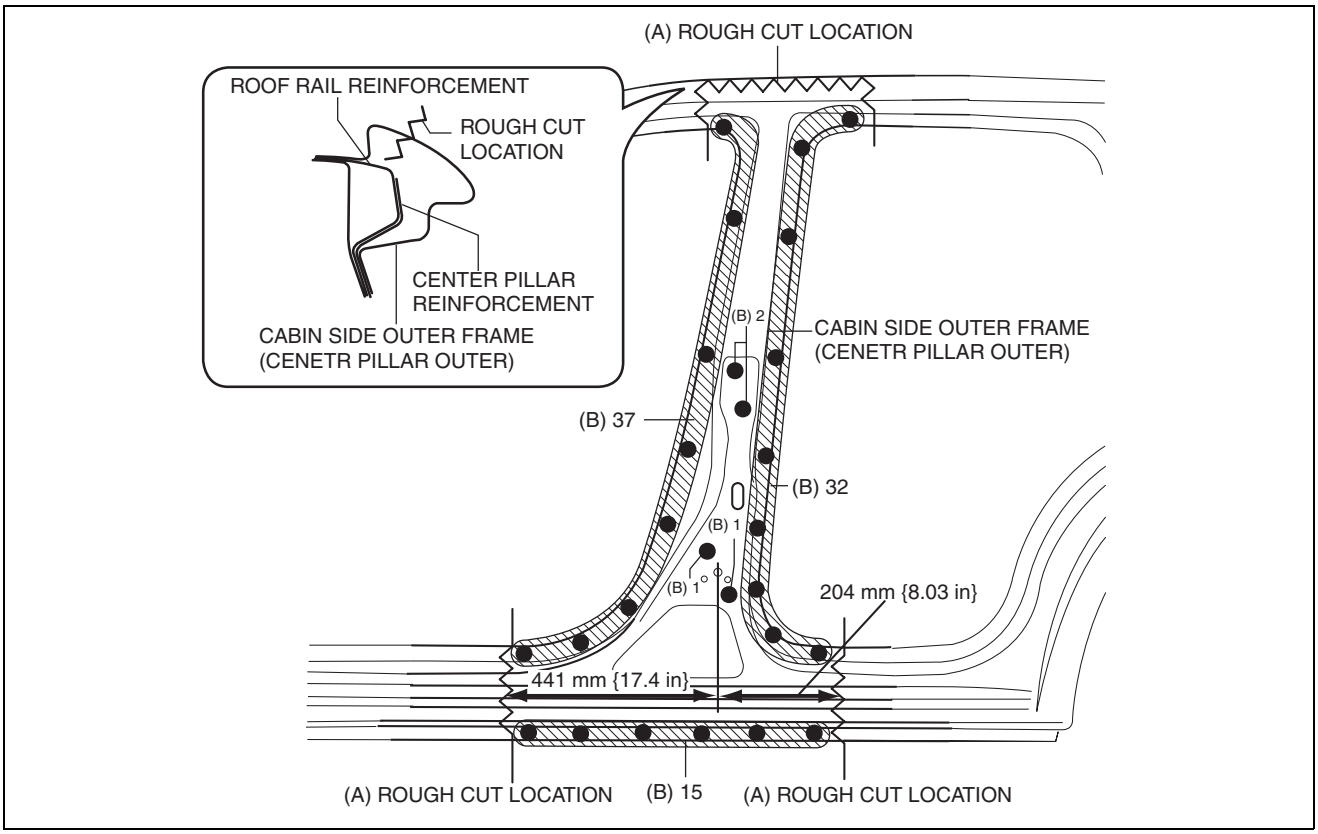

ac5wzb00000329

3. Drill the 34 locations indicated by (C) shown in the figure then remove the center pillar reinforcement.

BODY STRUCTURE [PANEL REPLACEMENT]

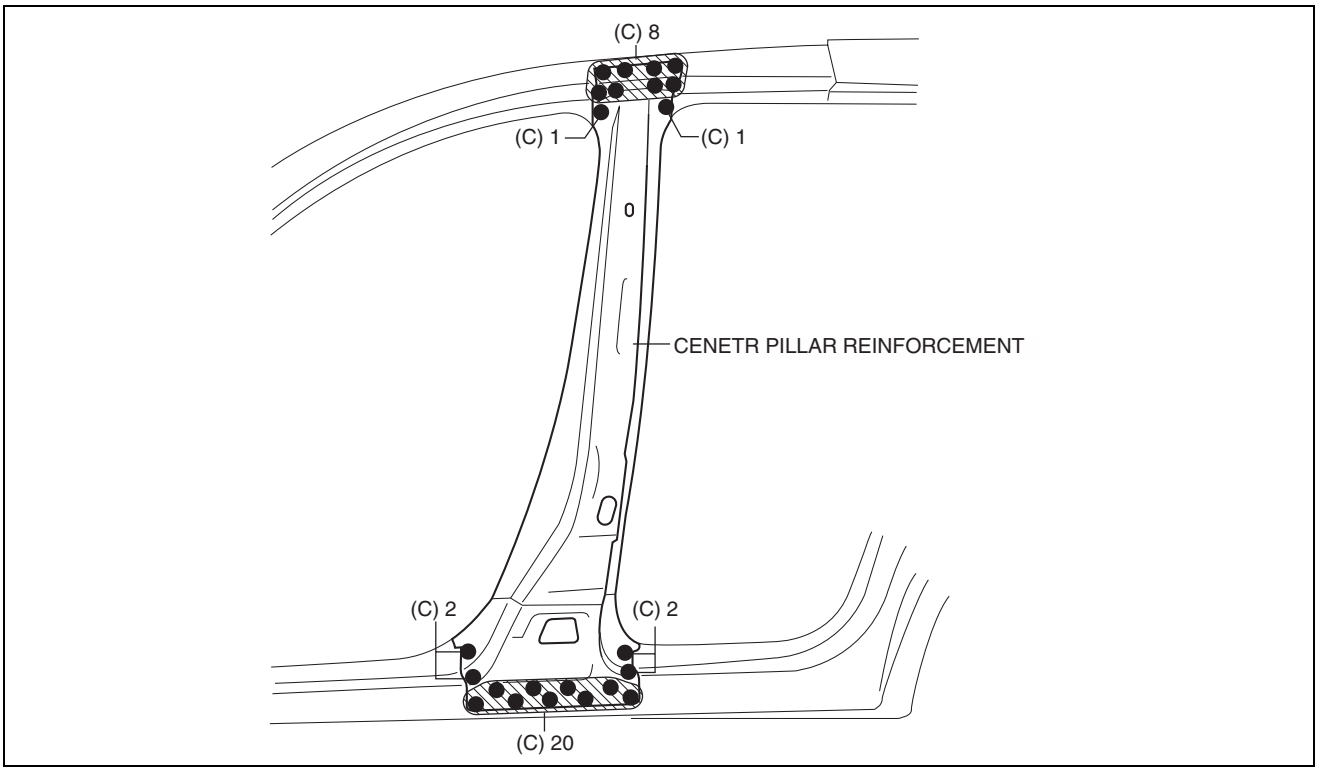

ac5wzb00000308

4. Rough cut the area locations indicated by (D).
5. Drill the 3 locations indicated by (E) shown in the figure.
6. Pull the inner center pillar in the direction of arrow shown in the figure, then remove it from between the inner side sill and side sill reinforcement.

BODY STRUCTURE [PANEL REPLACEMENT]

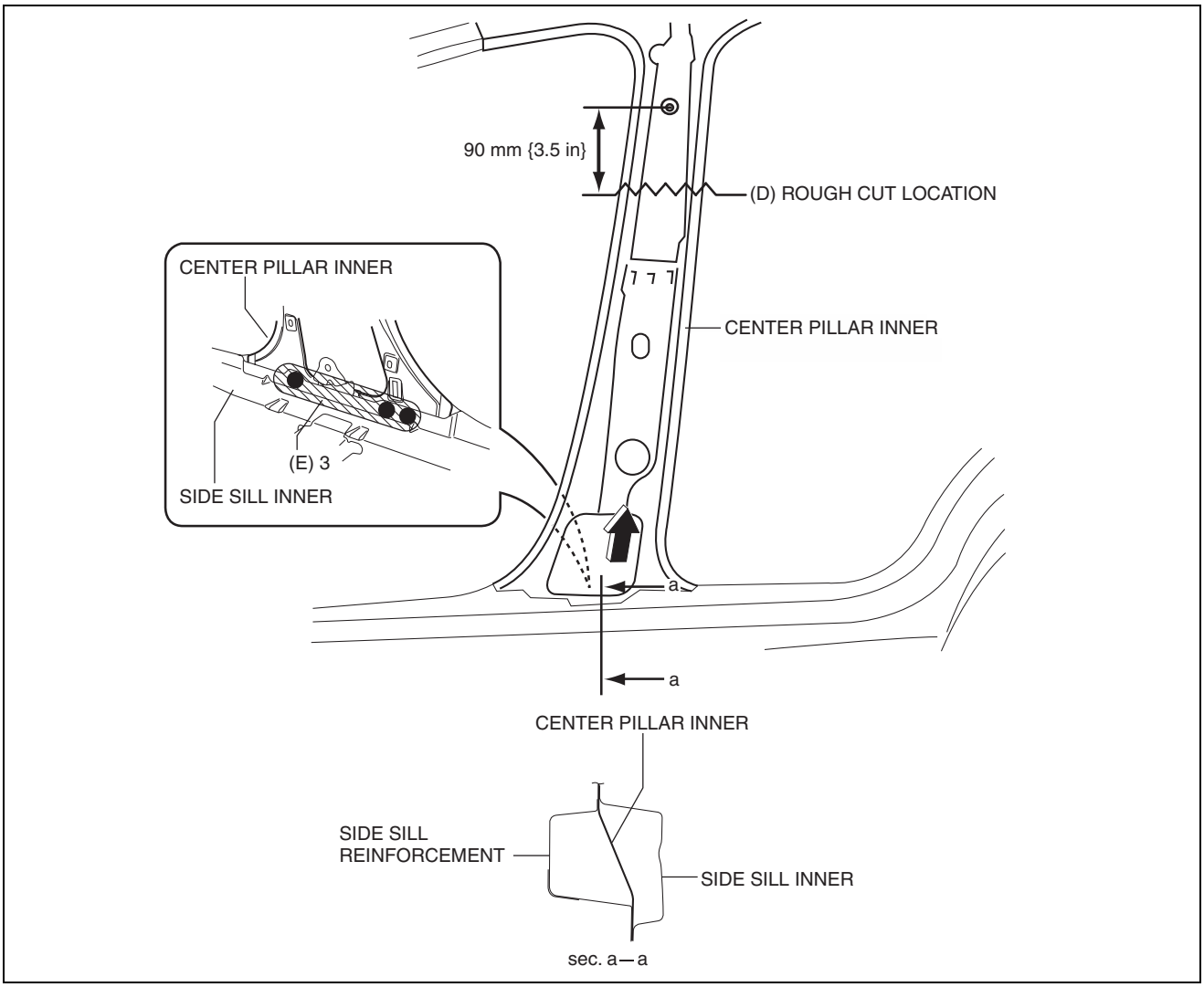

ac5wzb00000323

CENTER PILLAR INSTALLATION [PANEL REPLACEMENT]

id098008744000

Symbol Mark

SYMBOL MARK	MEANING
■	PLUG WELDING (ARC WELDING)
++++++++++++++++++++++++++++++++	CONTINUOUS ARC WELDING (CUT-AND-JOIN LOCATION)

ac5wzb00000220

Installation Procedure

1. When installing new parts, measure and adjust the body as necessary to conform with standard dimensions.
2. Drill holes for the plug welding before installing the new parts.
3. After temporarily installing new parts, make sure the related parts fit properly.
4. Insert the end of the inner center pillar locations indicated by (A) shown in the figure, between the inner side sill and side sill reinforcement.
5. Cut and join the area locations indicated by (B) shown in the figure.
6. Plug weld the 3 locations indicated by (C) shown in the figure.

BODY STRUCTURE [PANEL REPLACEMENT]

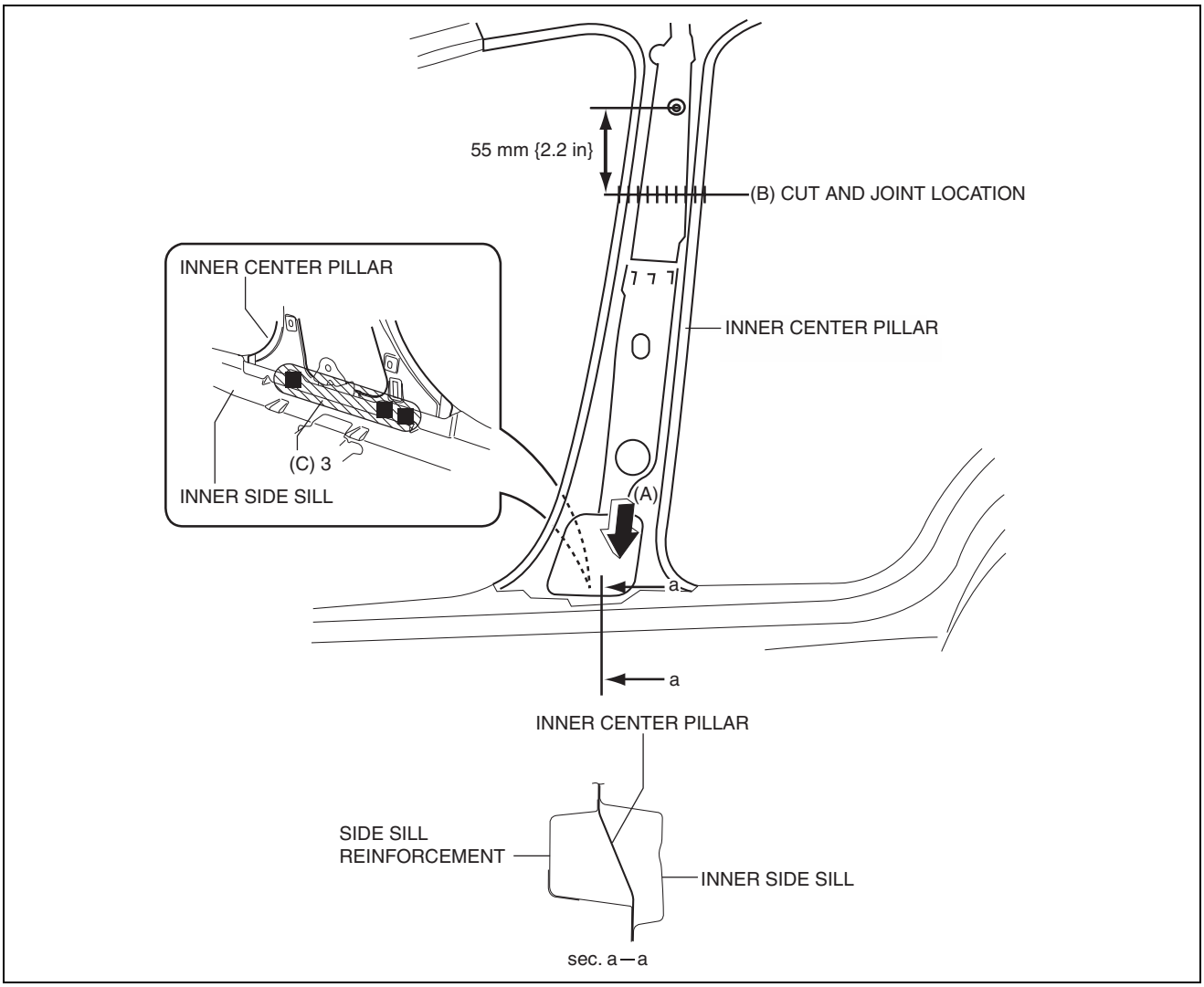

ac5wzb00000324

7. Plug weld the 18 locations indicated by (D) shown in the figure, then install the center pillar inner reinforcement to the center pillar reinforcement.

BODY STRUCTURE [PANEL REPLACEMENT]

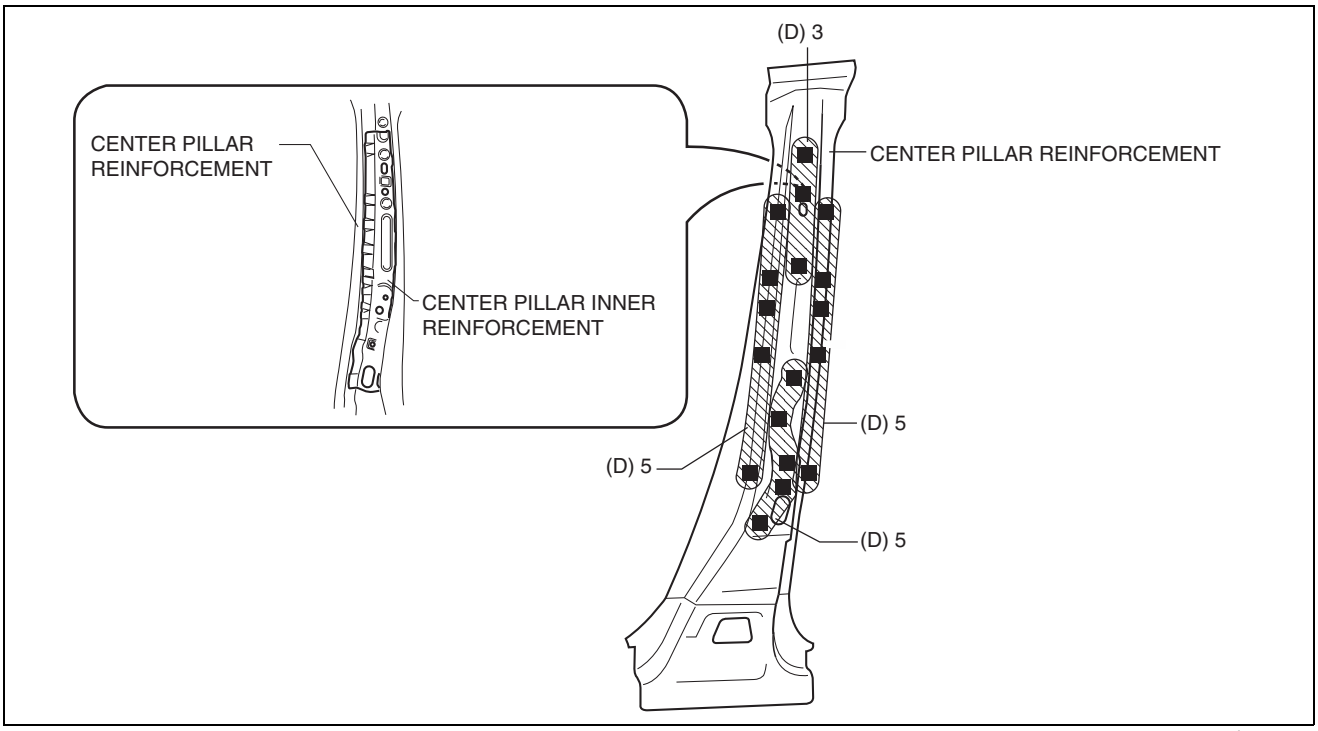

ac5wzb00000278

8. Plug weld the 34 locations indicated by (E) shown in the figure, then install the center pillar reinforcement.

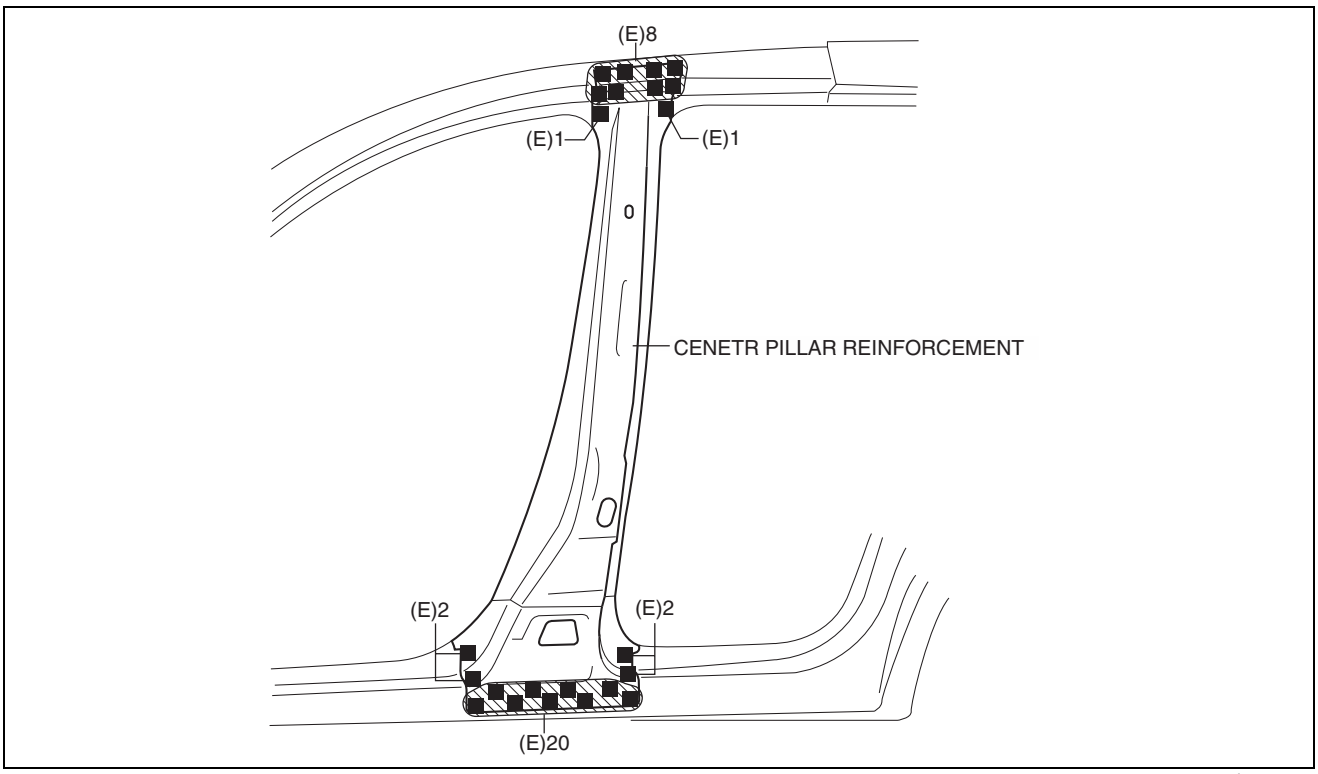

ac5wzb00000010

9. Cut and join the area locations indicated by (F) shown in the figure.
10. Plug weld the 92 locations indicated by (G) shown in the figure, then install the cabin side outer frame (outer center pillar).

BODY STRUCTURE [PANEL REPLACEMENT]

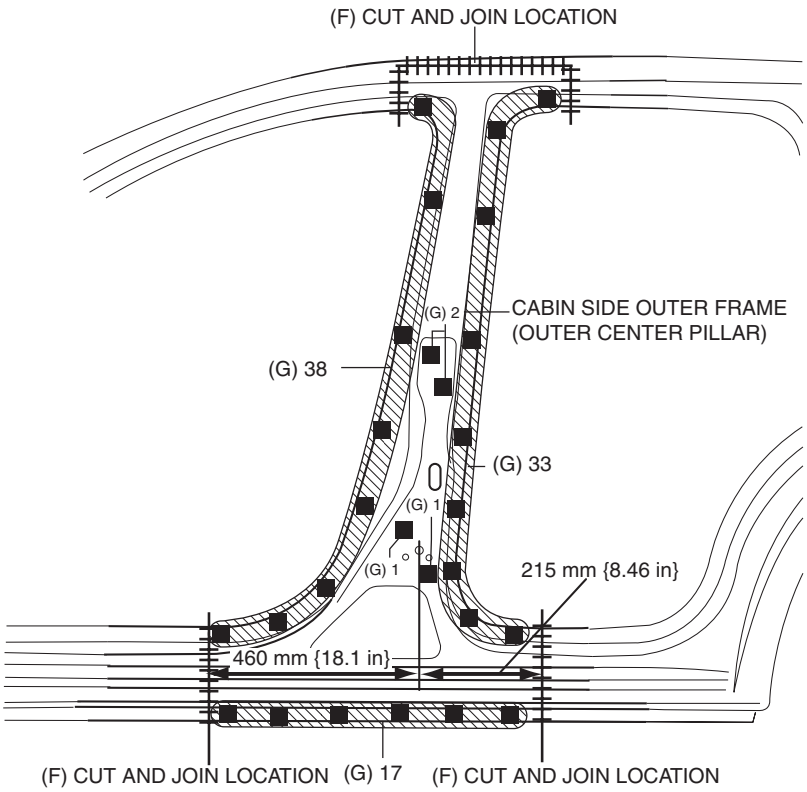

ac5wzb00000330

SIDE SILL PANEL REMOVAL [PANEL REPLACEMENT]

id098008615300

Symbol Mark

SYMBOL MARK	MEANING
●	SPOT WELDING
⎯⎯∧∧∧∧∧∧∧∧∧∧∧∧∧∧∧∧∧∧⎯⎯	ROUGH CUT LOCATION

ac5wzb00000071

Removal Procedure

Side sill (front side)

1. Rough cut the 2 locations indicated by (A) shown in the figure.
2. Drill the 18 locations indicated by (B) shown in the figure.

BODY STRUCTURE [PANEL REPLACEMENT]

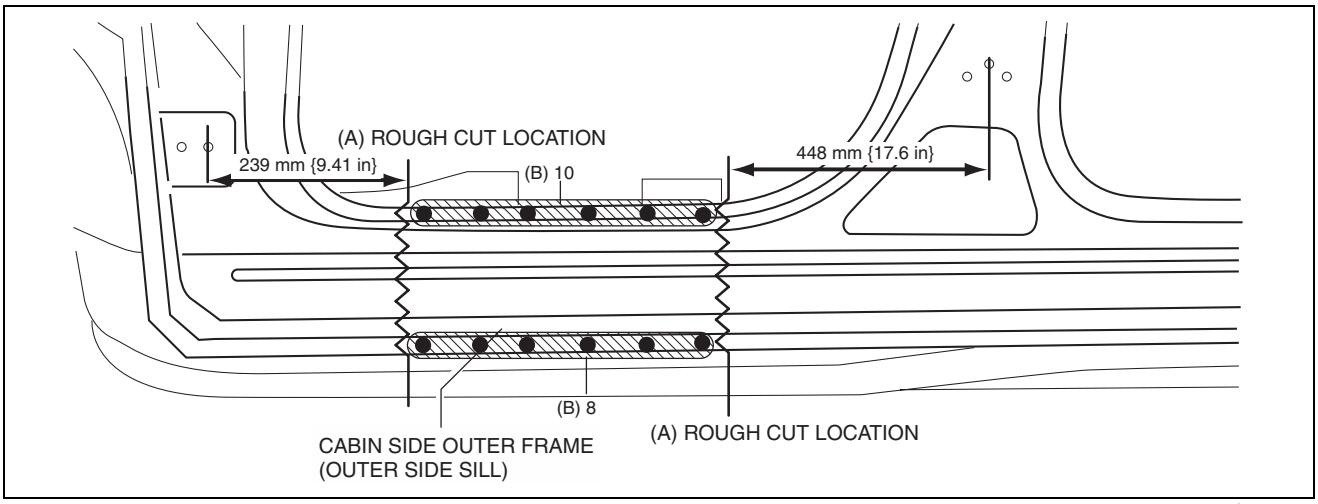

ac5wzb00000270

3. Remove the cabin side outer frame (outer side sill).

Side sill (component)

1. Rough cut the 3 locations indicated by (A) shown in the figure.
2. Drill the 114 locations indicated by (B) shown in the figure, then remove the cabin side outer frame (outer side sill).

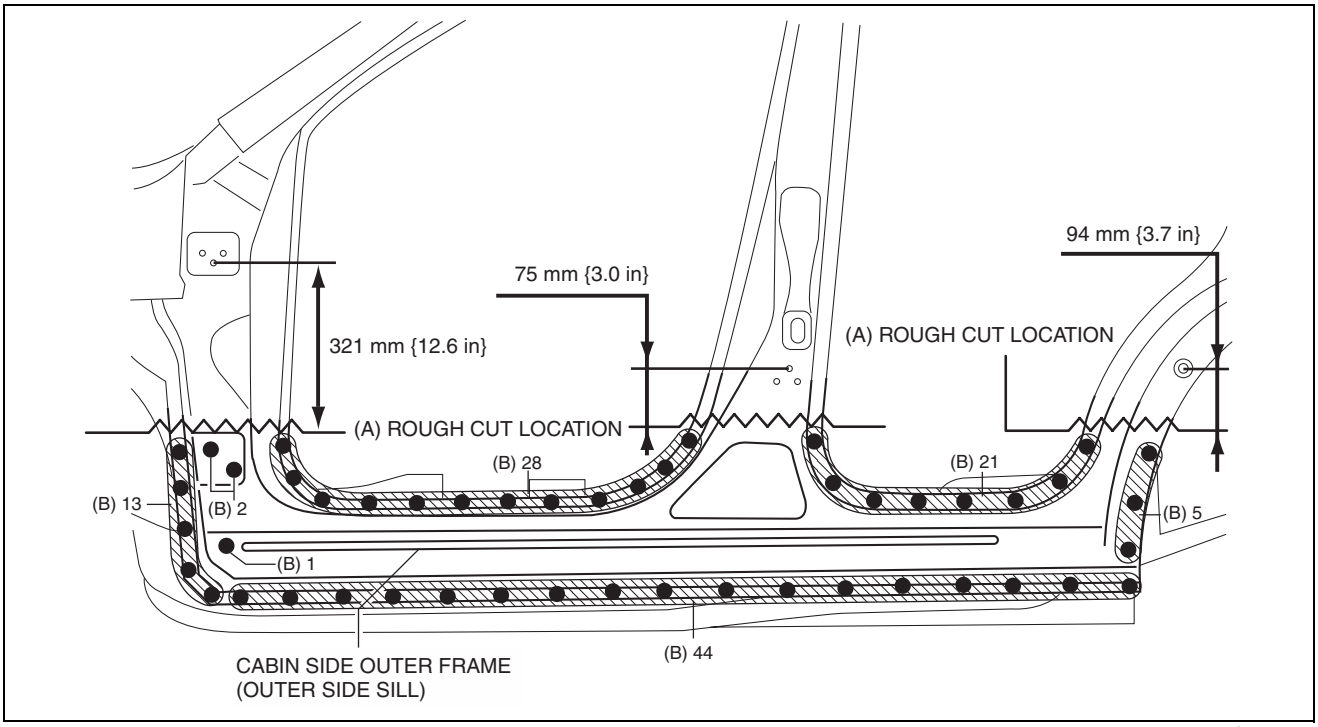

ac5wzb00000271

3. Drill the 2 locations indicated by (C) shown in the figure, then remove the front fender set bracket.
4. Drill the 6 locations indicated by (D) shown in the figure, then remove the upper side sill reinforcement.

BODY STRUCTURE [PANEL REPLACEMENT]

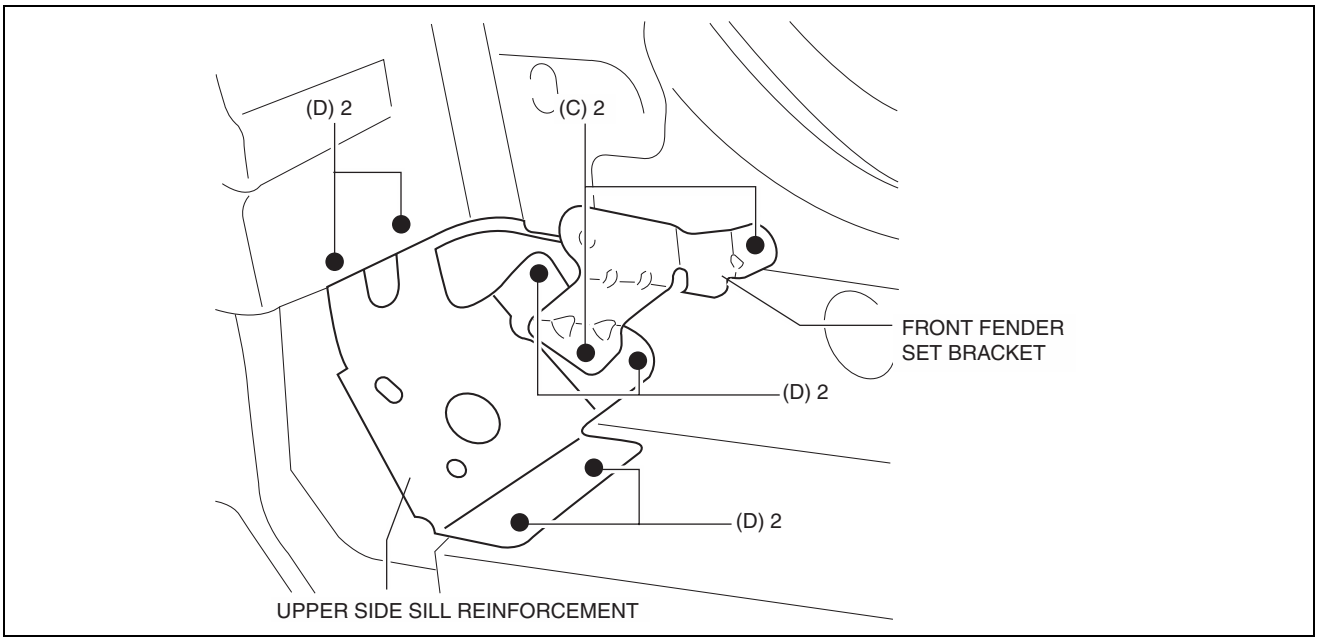

ac5wzb00000272

5. Drill the 1 location indicated by (E) shown in the figure.

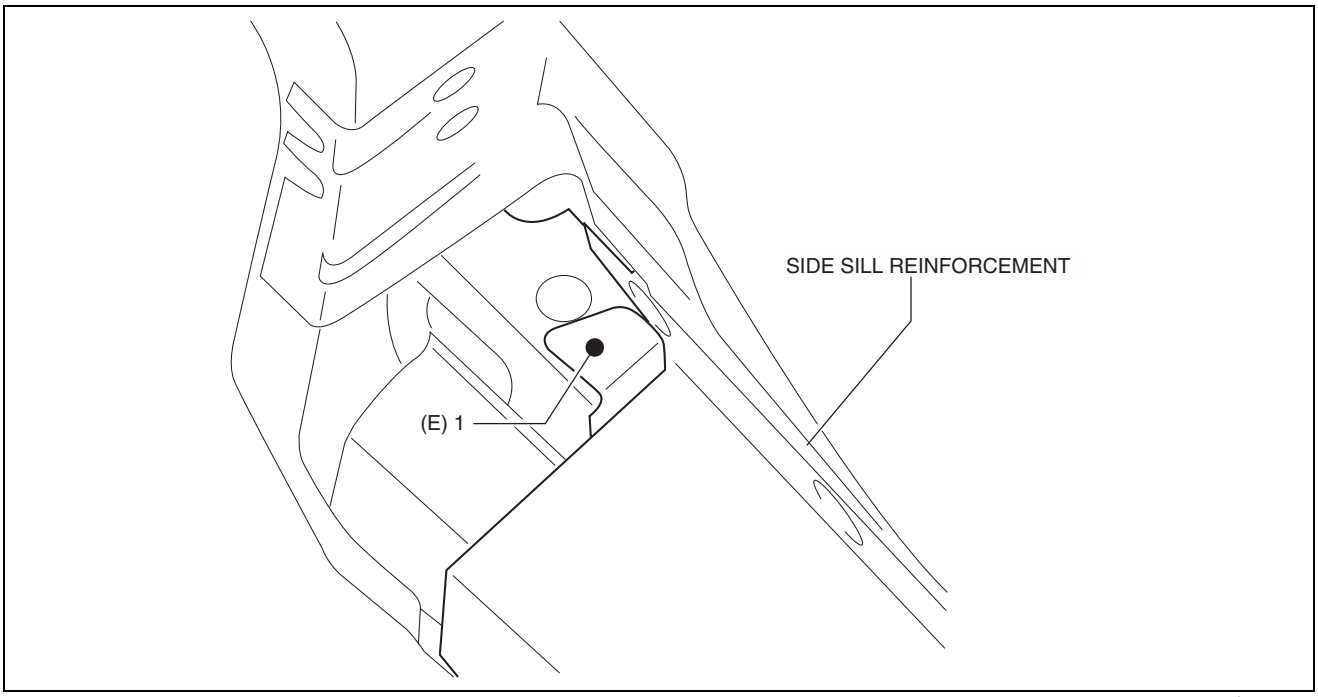

ac5wzb00000118

6. Drill the 35 locations indicated by (F) shown in the figure.

BODY STRUCTURE [PANEL REPLACEMENT]

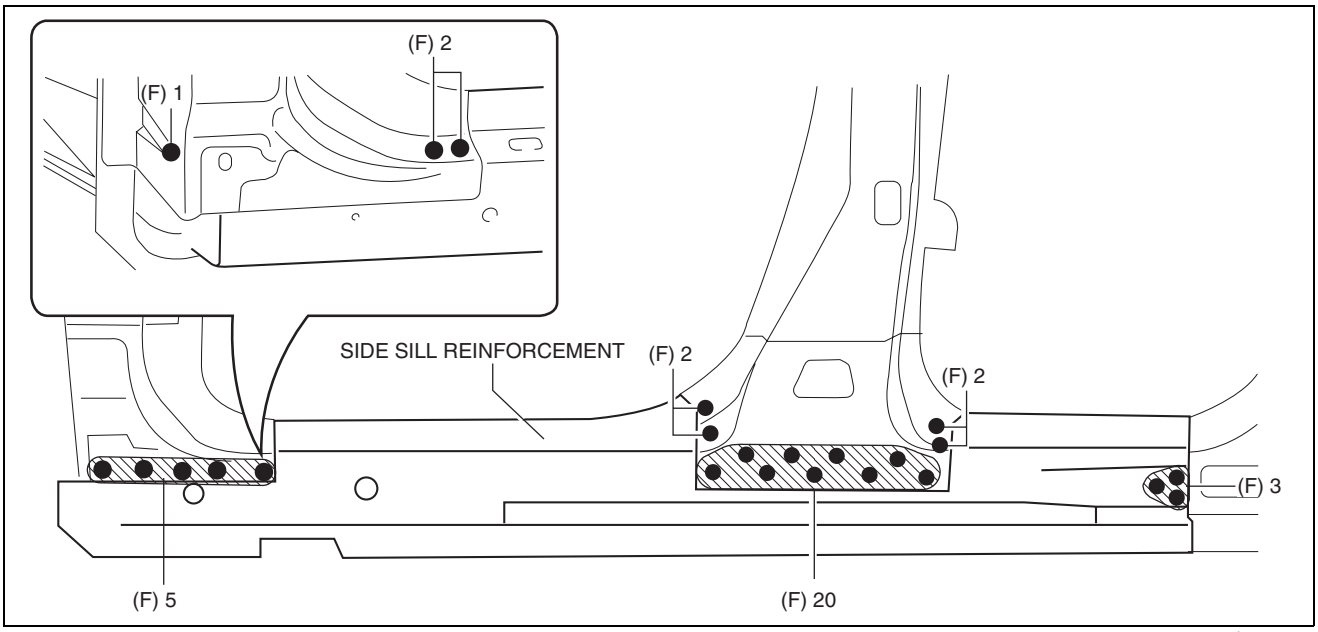

ac5uub00000068

7. Pull the side sill reinforcement from the inner side sill, hinge reinforcement and center pillar reinforcement, and then remove it.

SIDE SILL PANEL INSTALLATION [PANEL REPLACEMENT]

id098008615200

Symbol Mark

SYMBOL MARK	MEANING
■	PLUG WELDING (ARC WELDING)
●	SPOT WELDING
++++++++++++++++++++++++++++++++	CONTINUOUS ARC WELDING (CUT-AND-JOIN LOCATION)

ac5uub00000043

Installation Procedure

Side sill (front side)

1. When installing new parts, measure and adjust the body as necessary to conform with standard dimensions.
2. Drill holes for the plug welding before installing the new parts.
3. After temporarily installing new parts, make sure the related parts fit properly.
4. Cut and join the 2 locations indicated by (A) shown in the figure.
5. Plug weld the 18 locations indicated by (B) shown in the figure, then cabin side outer frame (outer side sill).

BODY STRUCTURE [PANEL REPLACEMENT]

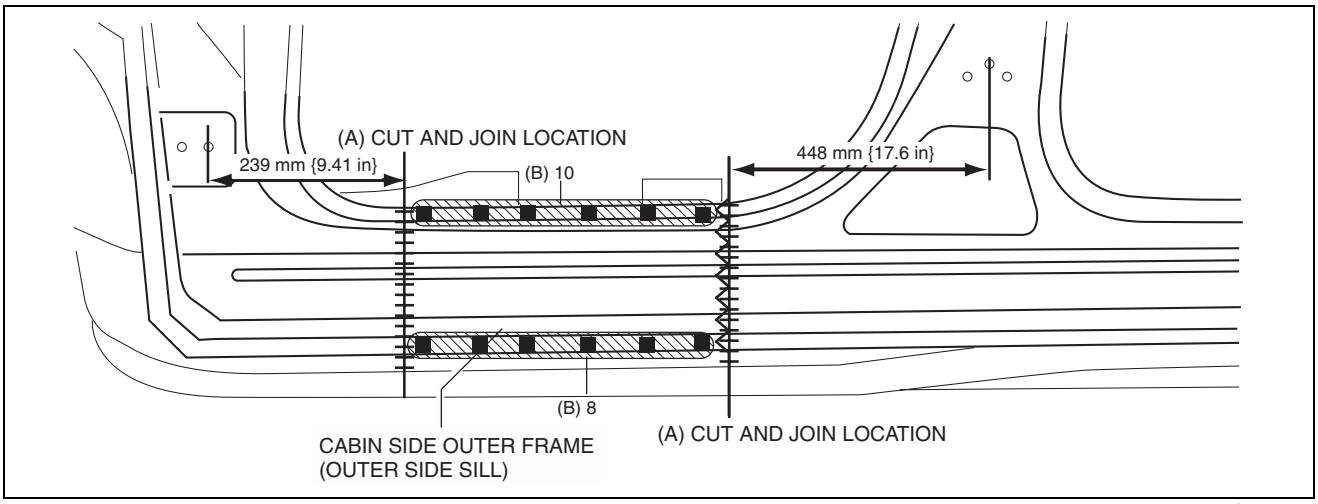

ac5wzb00000267

Side sill (component)

1. When installing new parts, measure and adjust the body as necessary to conform with standard dimensions.
2. Drill holes for the plug welding before installing the new parts.
3. After temporarily installing new parts, make sure the related parts fit properly.
4. Drill the 4 locations indicated by (A) shown in the figure, then remove the upper side sill reinforcement from the new side sill reinforcement.

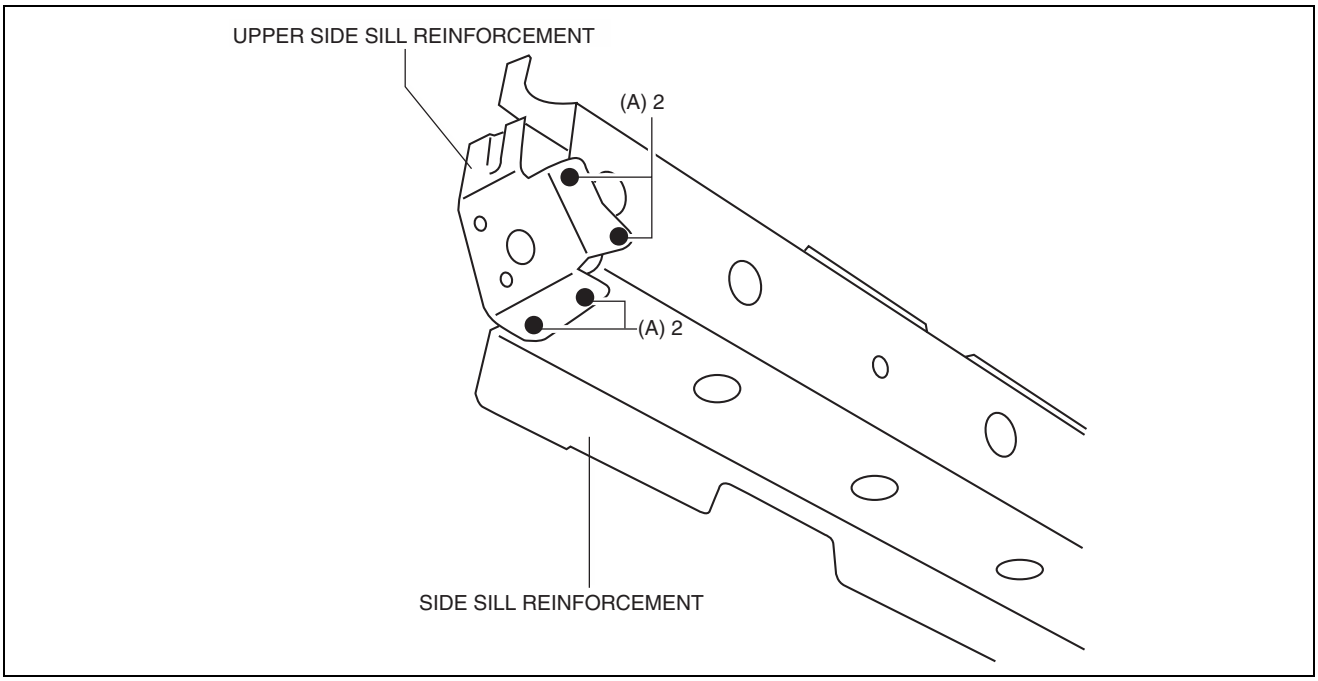

ac5uub00000044

5. Plug weld the 32 locations indicated by (B) shown in the figure.
6. Plug weld the 3 locations indicated by (C) shown in the figure, then install the side sill reinforcement.

BODY STRUCTURE [PANEL REPLACEMENT]

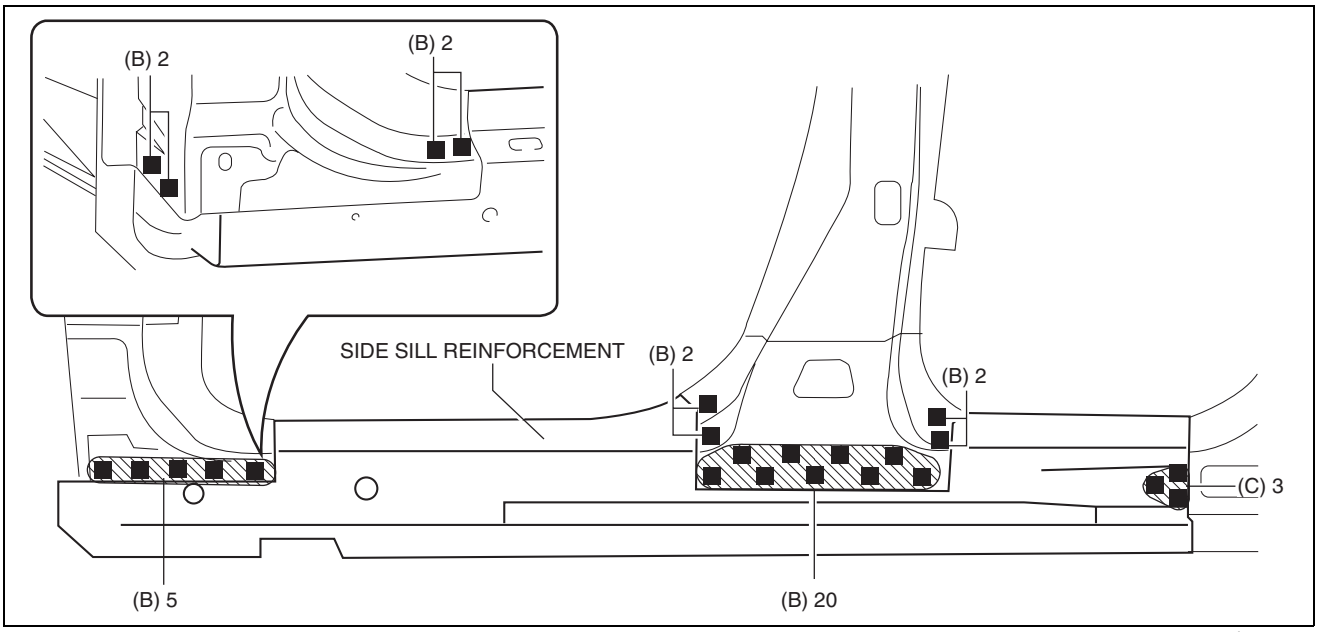

ac5wzb00000197

7. Plug weld the 6 locations indicated by (D) shown in the figure, then install the upper side sill reinforcement.
8. Plug weld the 2 locations indicated by (E) shown in the figure, then install the front fender set bracket.

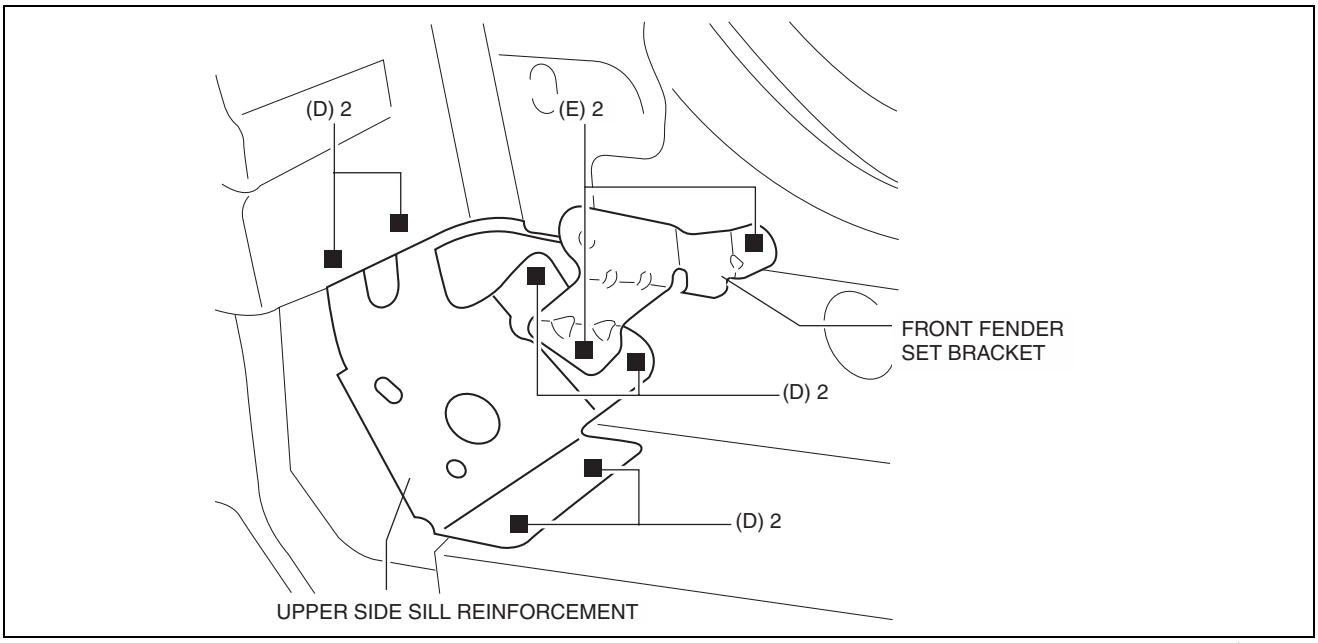

ac5uub00000045

9. Cut and join the 3 locations indicated by (F) shown in the figure.
10. Plug weld the 120 locations indicated by (G) shown in the figure, then install the cabin side outer frame (outer side sill).

BODY STRUCTURE [PANEL REPLACEMENT]

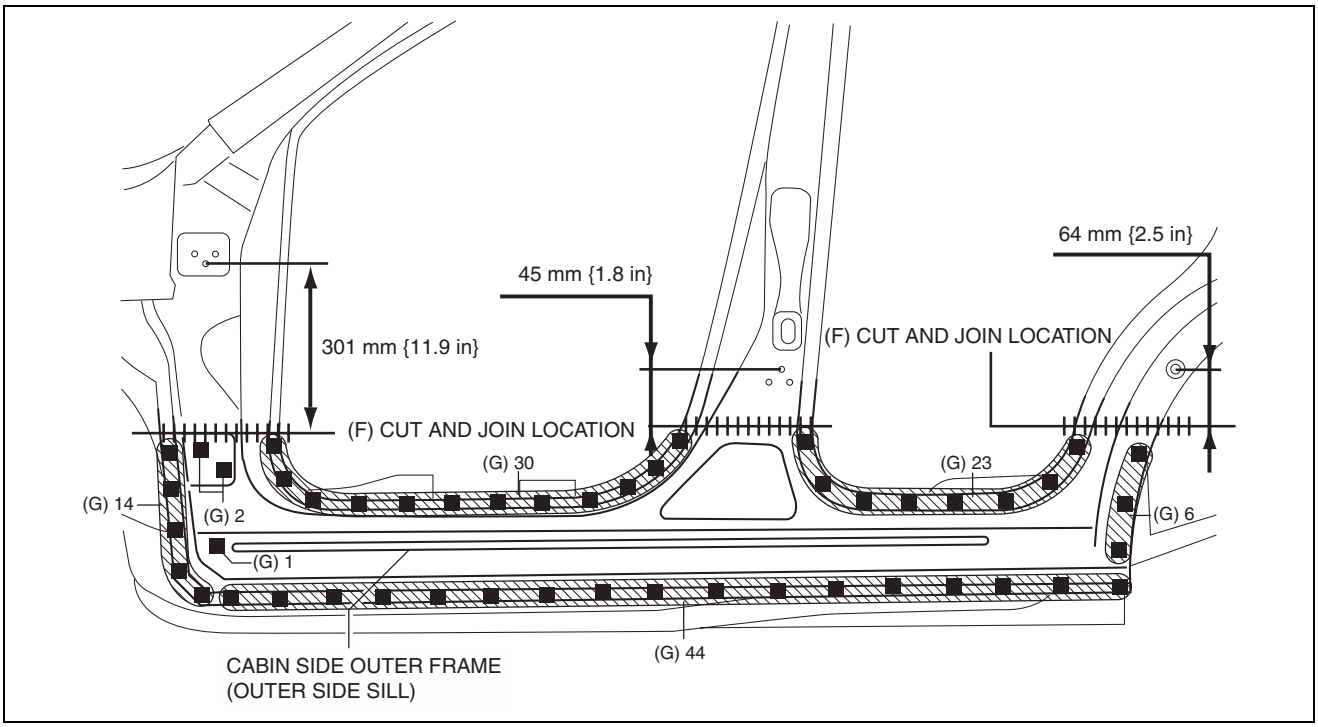

ac5wzb00000269

REAR FENDER PANEL REMOVAL [PANEL REPLACEMENT]

id098008744900

Symbol Mark

SYMBOL MARK	MEANING
●	SPOT WELDING
⟋⟍⟋⟍⟋⟍

BODY STRUCTURE [PANEL REPLACEMENT]

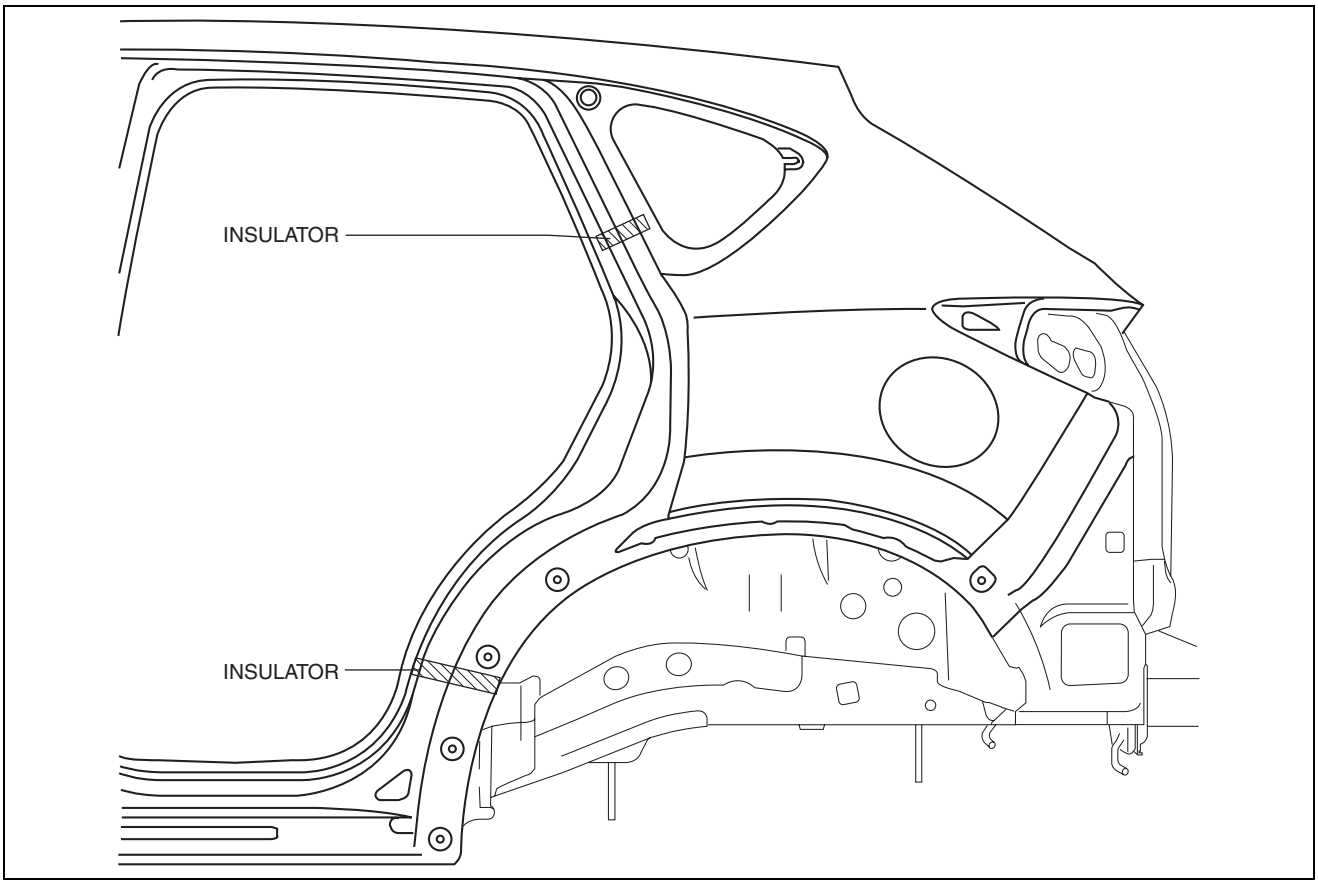

ac5wzb00000234

1. Rough cut the 3 locations indicated by (A) shown in the figure.
2. Drill the 90 locations indicated by (B) shown in the figure.

BODY STRUCTURE [PANEL REPLACEMENT]

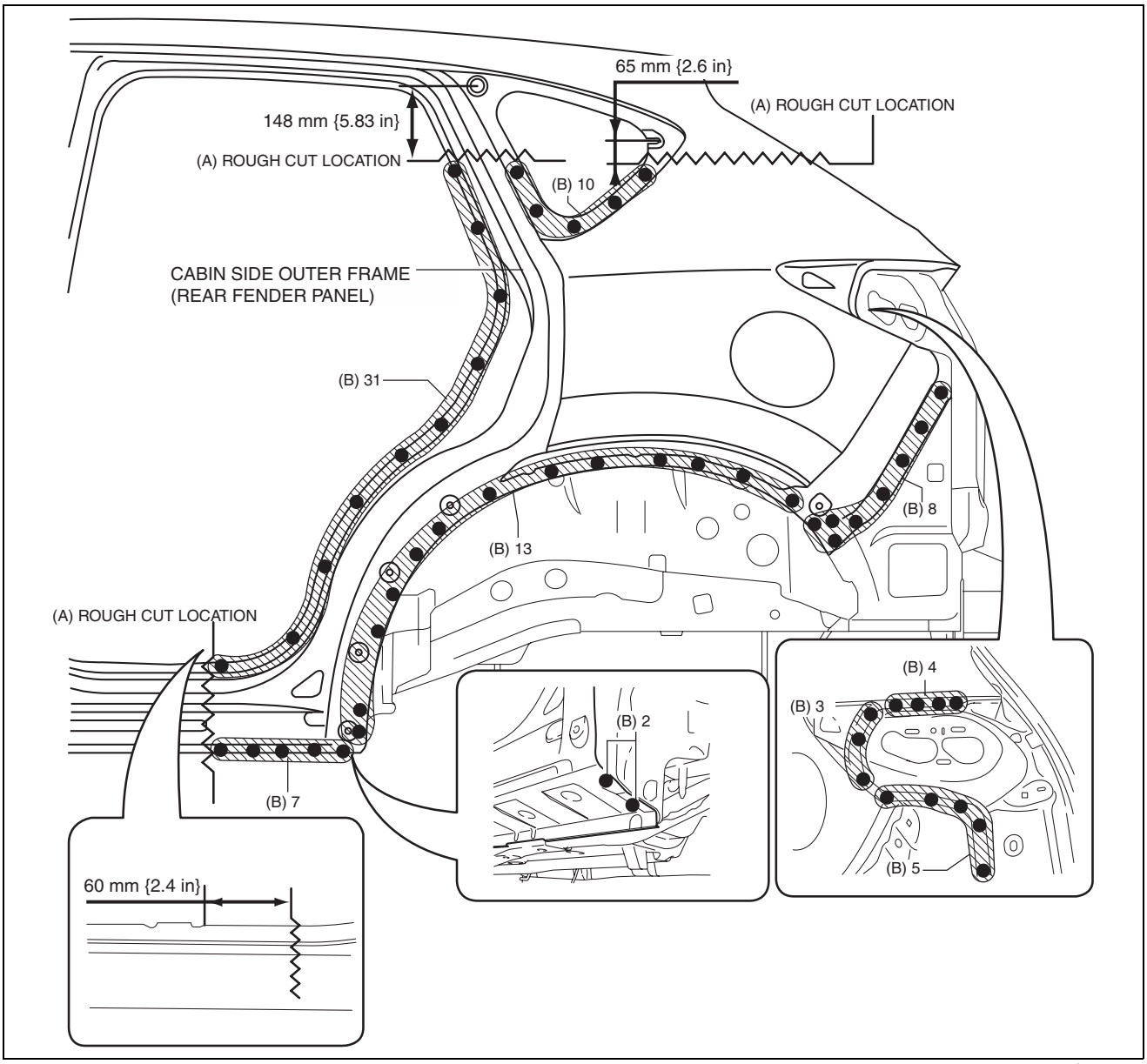

ac5uub00000071

BODY STRUCTURE [PANEL REPLACEMENT]

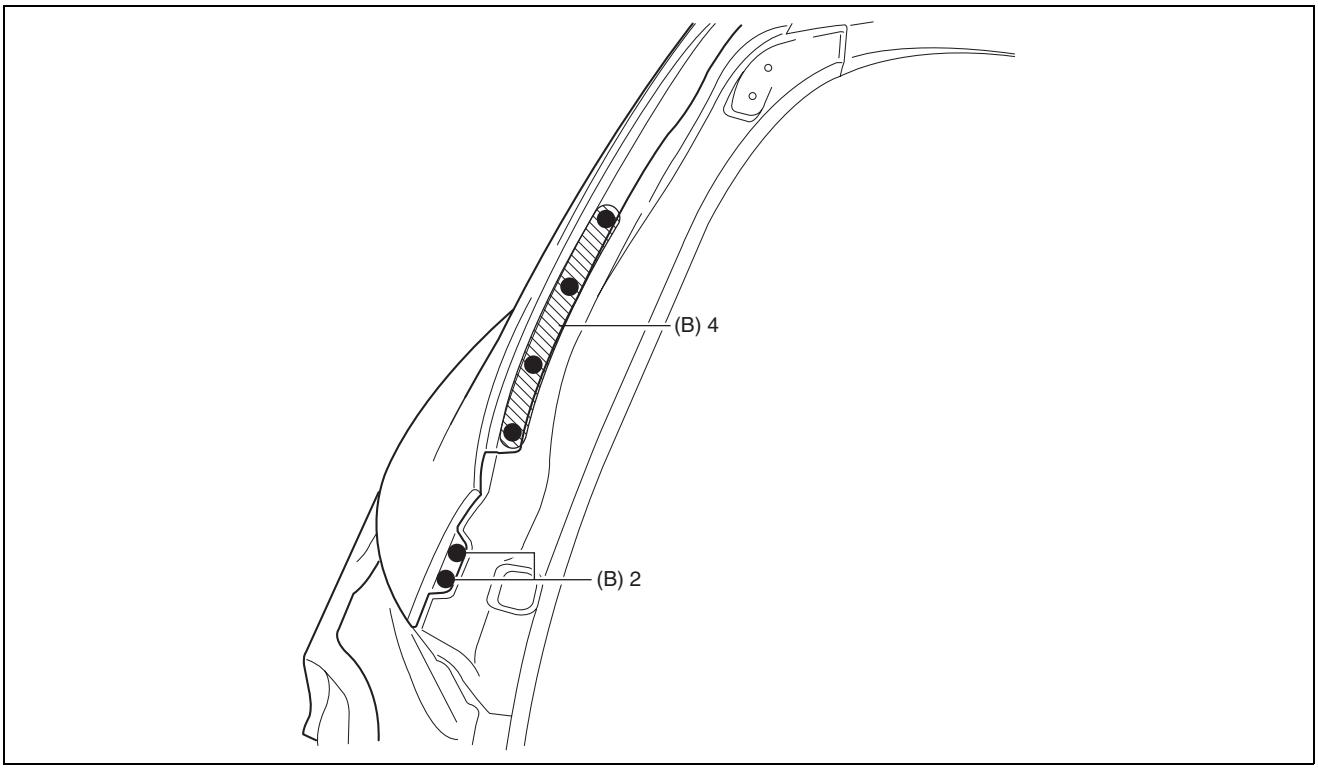

ac5wzb00000123

3. Remove the cabin side outer frame (rear fender panel).

REAR FENDER PANEL INSTALLATION [PANEL REPLACEMENT]

id098008745000

Symbol Mark

SYMBOL MARK	MEANING
■	PLUG WELDING (ARC WELDING)
⊣⊣⊣⊣⊣⊣⊣⊣⊣⊣⊣⊣⊣⊣⊣⊣⊣⊣⊣⊣⊣⊣⊣⊣⊣⊣⊣⊣⊣⊣	CONTINUOUS ARC WELDING (CUT-AND-JOIN LOCATION)

ac5wzb00000222

Installation Procedure

1. When installing new parts, measure and adjust the body as necessary to conform with standard dimensions.
2. Drill holes for the plug welding before installing the new parts.
3. After temporarily installing new parts, make sure the related parts fit properly.
4. Before installing new parts, apply body sealer to the wheel arch line.

BODY STRUCTURE [PANEL REPLACEMENT]

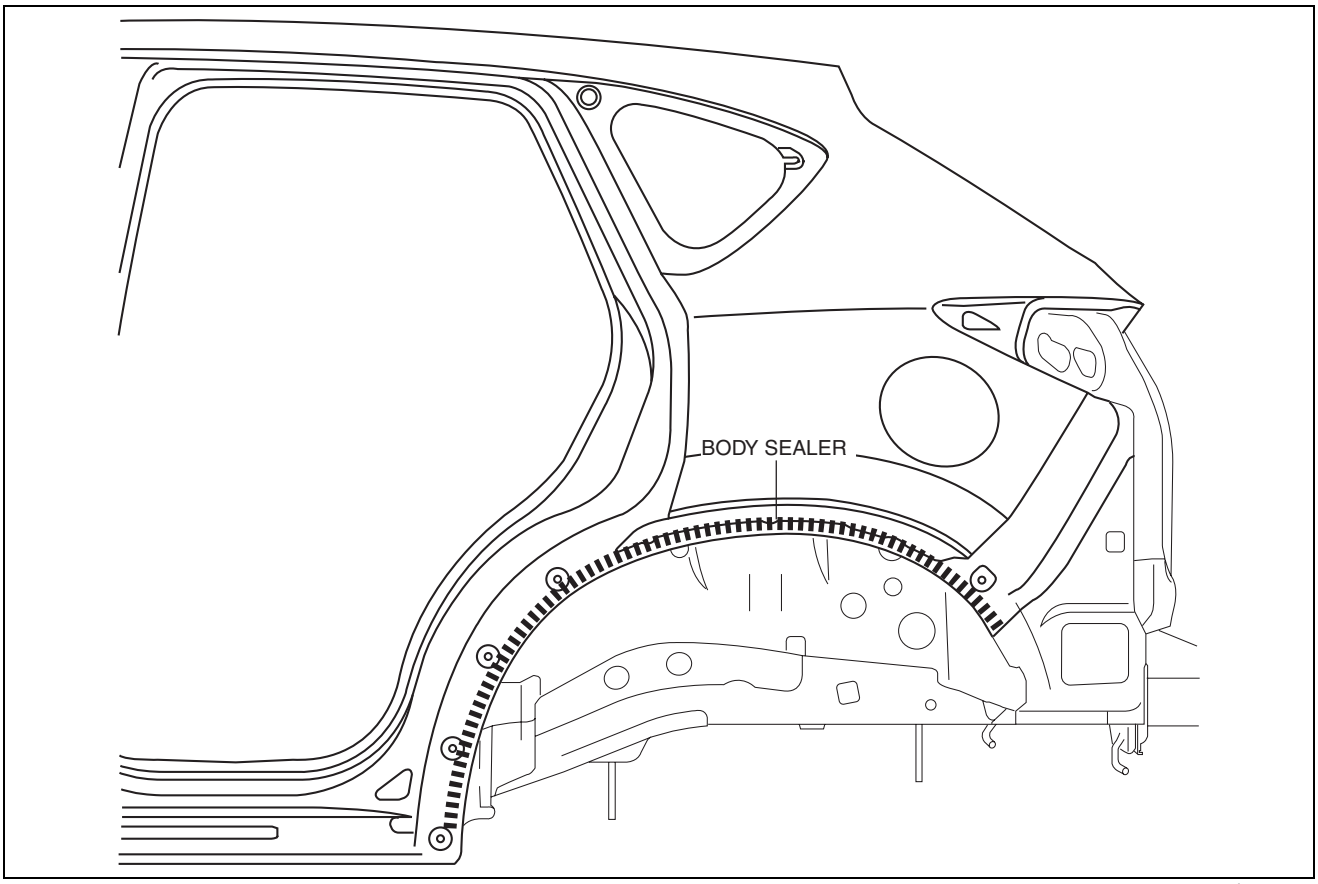

ac5wzb00000124

5. Cut and join the 3 locations indicated by (A) shown in the figure.
6. Plug weld the 95 locations indicated by (B) shown in the figure, then install the cabin side outer frame (rear fender panel).

BODY STRUCTURE [PANEL REPLACEMENT]

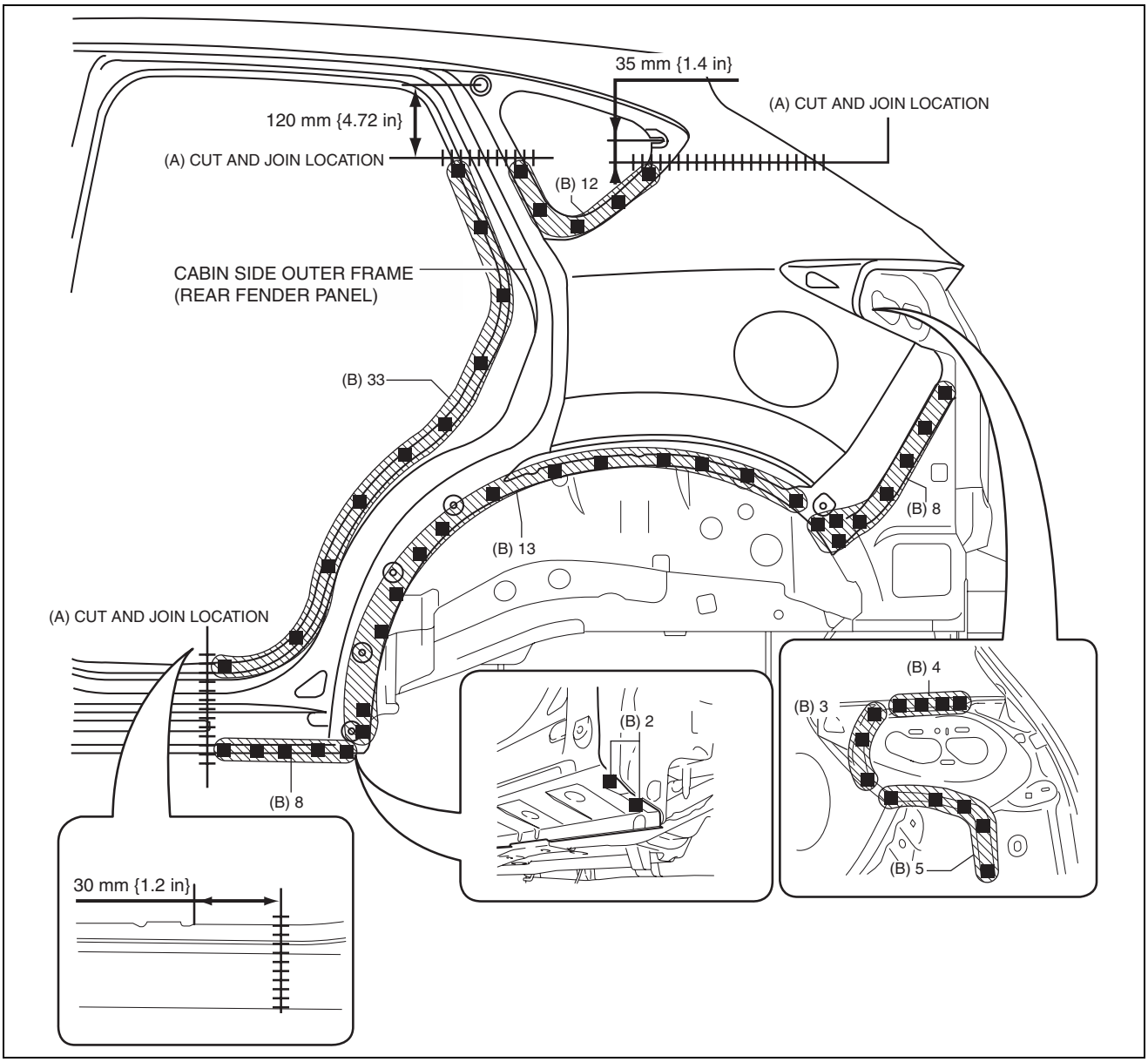

ac5uub00000072

BODY STRUCTURE [PANEL REPLACEMENT]

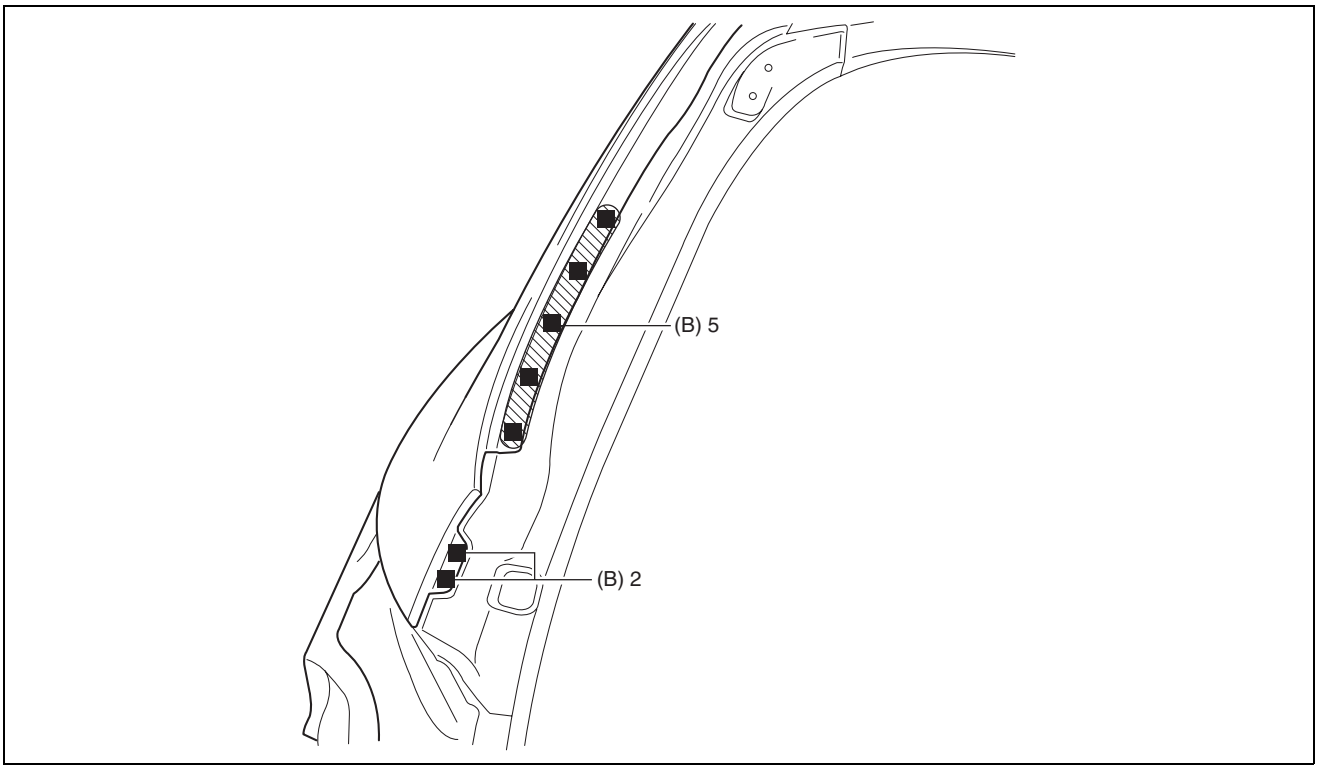

ac5wzb00000126

REAR FENDER LOWER PANEL REMOVAL [PANEL REPLACEMENT]

id098008614100

Symbol Mark

SYMBOL MARK	MEANING
●	SPOT WELDING

ac5wzb00000072

Removal Procedure

1. Drill the 20 locations shown in the figure.

BODY STRUCTURE [PANEL REPLACEMENT]

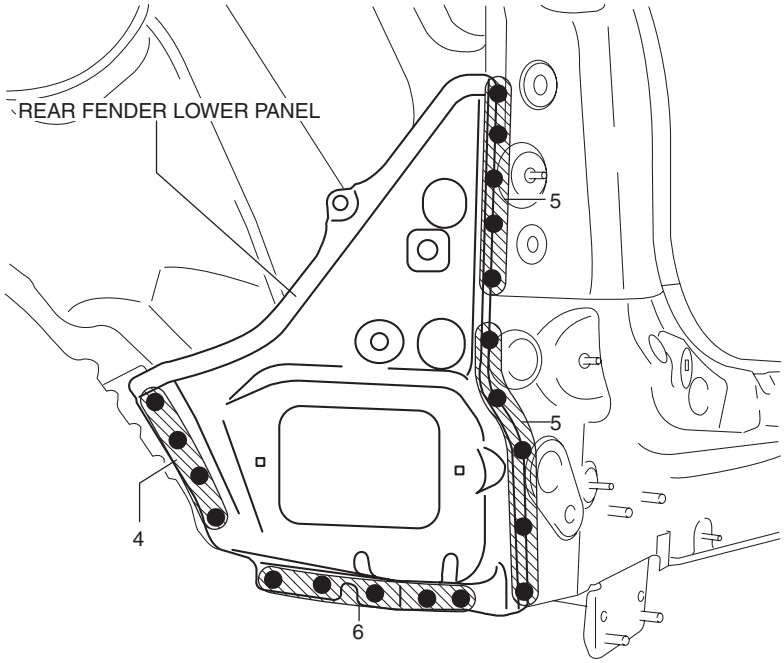

ac5uub00000073

2. Remove the rear fender lower panel.

REAR FENDER LOWER PANEL INSTALLATION [PANEL REPLACEMENT]

id098008614200

Symbol Mark

SYMBOL MARK	MEANING
●	SPOT WELDING

ac5wzb00000073

Installation Procedure

1. When installing new parts, measure and adjust the body as necessary to conform with standard dimensions.
2. After temporarily installing new parts, make sure the related parts fit properly.
3. Spot weld the 26 locations shown in the figure, then install the rear fender lower panel.

BODY STRUCTURE [PANEL REPLACEMENT]

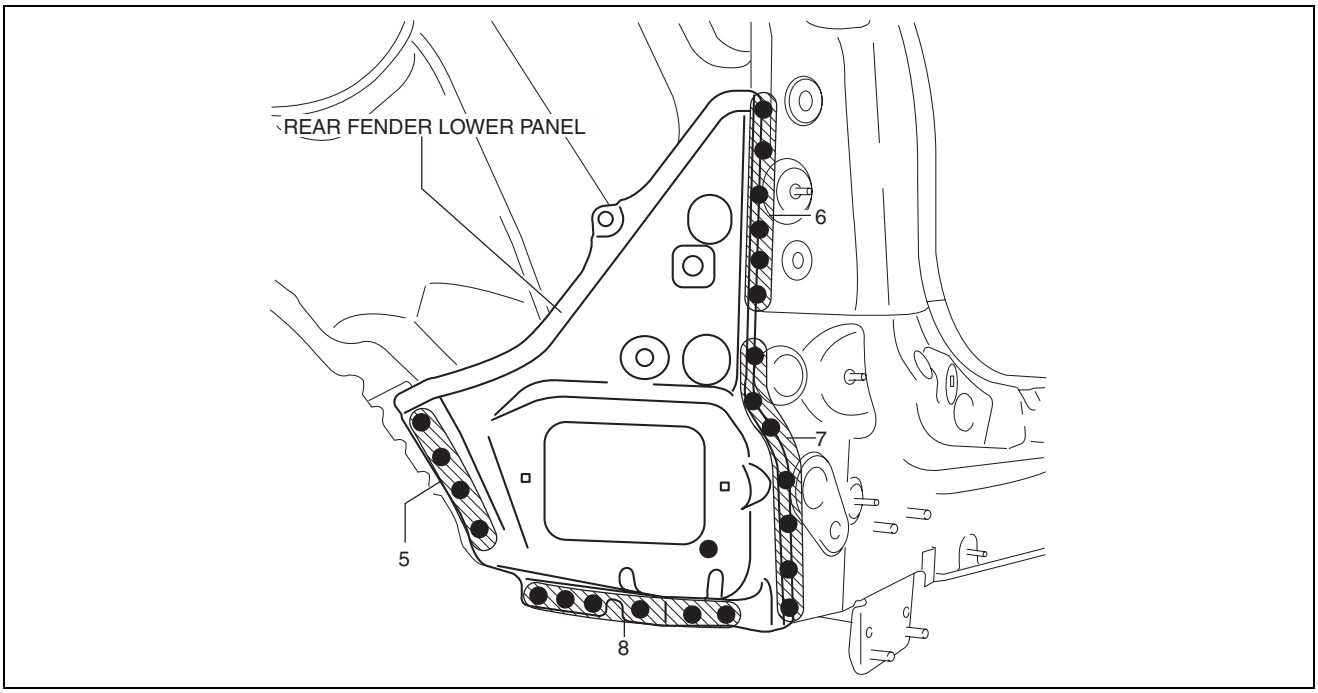

ac5uub00000074

CORNER PLATE REMOVAL [PANEL REPLACEMENT]

id098008610400

Symbol Mark

SYMBOL MARK	MEANING
●	SPOT WELDING

ac5wzb00000076

Removal Procedure

1. Drill the 11 location shown in the figure.

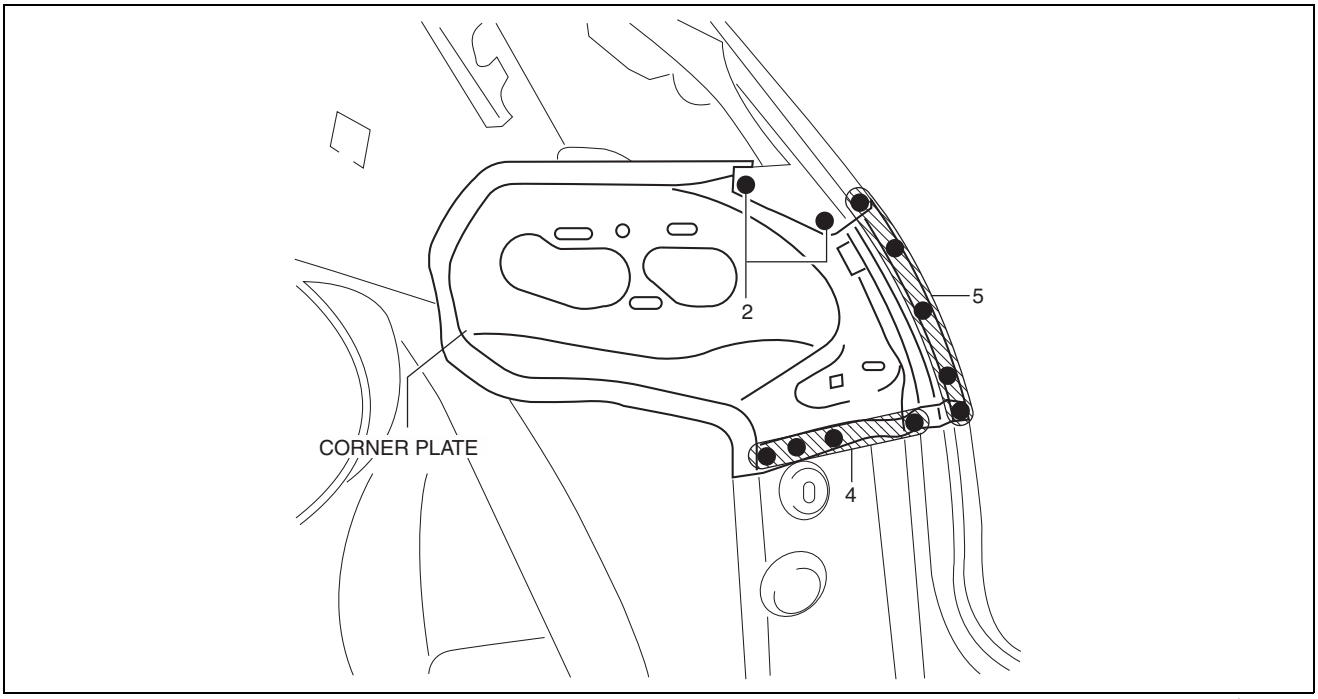

ac5wzb00000130

2. Remove the corner plate.

BODY STRUCTURE [PANEL REPLACEMENT]

CORNER PLATE INSTALLATION [PANEL REPLACEMENT]

id098008610500

Symbol Mark

SYMBOL MARK	MEANING
●	SPOT WELDING
■	PLUG WELDING (ARC WELDING)

ac5wzb00000216

Installation Procedure

1. When installing new parts, measure and adjust the body as necessary to conform with standard dimensions.
2. Drill holes for the plug welding before installing the new parts.
3. After temporarily installing new parts, make sure the related parts fit properly.
4. Plug weld the 3 locations indicated by (A) shown in the figure.
5. Spot weld the 11 locations by (B) shown in the figure, then install the corner plate.

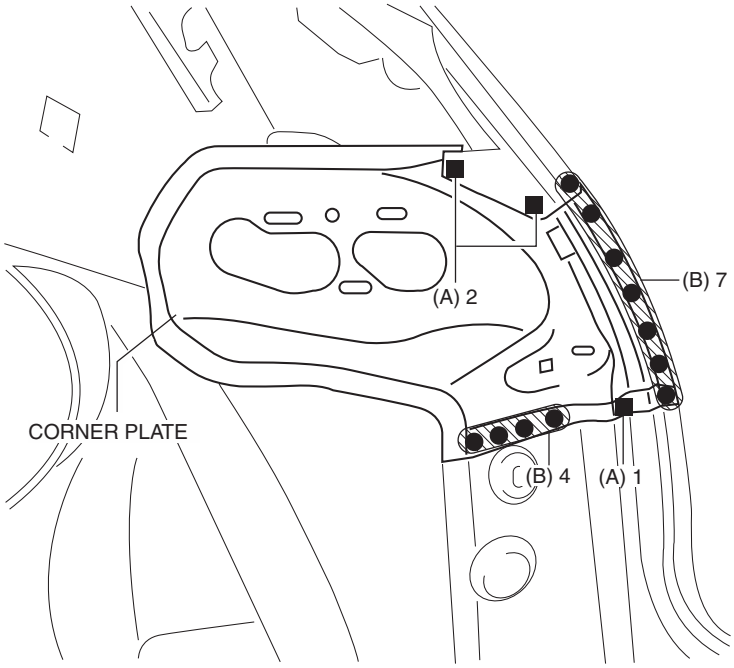

ac5wzb00000326

CORNER JUNCTION REMOVAL [PANEL REPLACEMENT]

id098008611400

Symbol Mark

SYMBOL MARK	MEANING
●	SPOT WELDING

ac5wzb00000078

Removal Procedure

1. Drill the 27 locations shown in the figure.

BODY STRUCTURE [PANEL REPLACEMENT]

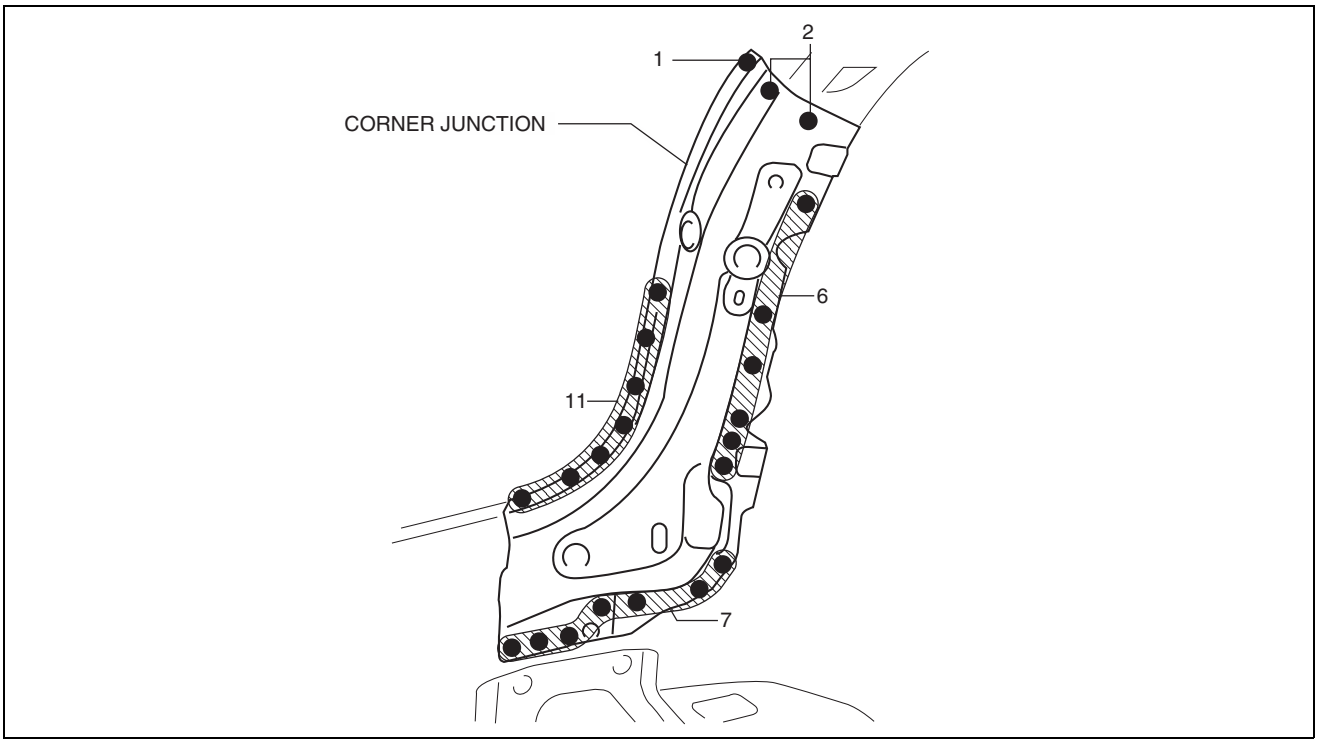

ac5wzb00000132

2. Remove the corner junction.

CORNER JUNCTION INSTALLATION [PANEL REPLACEMENT]

id098008611500

Symbol Mark

SYMBOL MARK	MEANING
●	SPOT WELDING
■	PLUG WELDING (ARC WELDING)

ac5wzb00000217

Installation Procedure

1. When installing new parts, measure and adjust the body as necessary to conform with standard dimensions.
2. Drill holes for the plug welding before installing the new parts.
3. After temporarily installing new parts, make sure the related parts fit properly.
4. Spot weld the 15 locations indicated by (A) shown in the figure.
5. Plug weld the 15 locations indicated by (B) shown in the figure, then install the corner junction.

BODY STRUCTURE [PANEL REPLACEMENT]

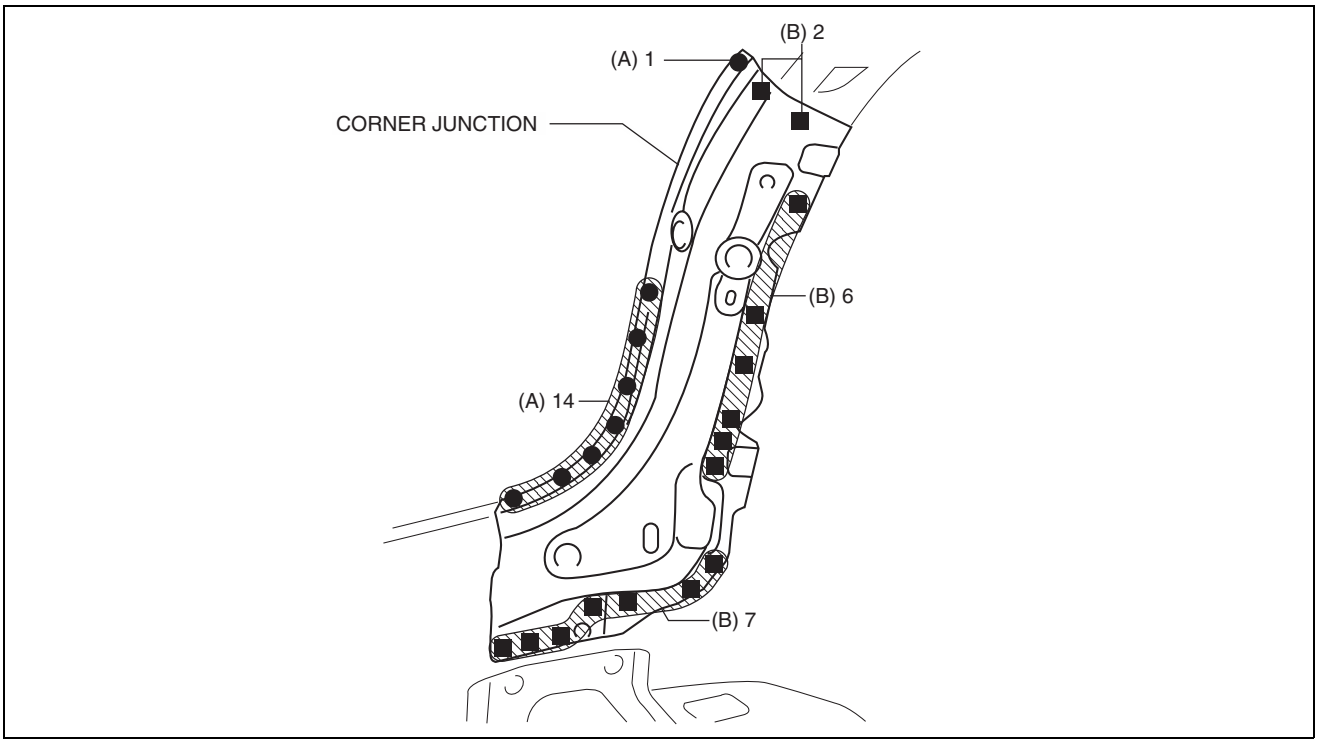

ac5wzb00000259

REAR END PANEL REMOVAL [PANEL REPLACEMENT]

id098008744500

Symbol Mark

SYMBOL MARK	MEANING
●	SPOT WELDING

ac5wzb00000080

Removal Procedure

1. Drill the 77 locations indicated by (A) shown in the figure.
2. Drill the 18 locations indicated by (B) from room side shown in the figure.

BODY STRUCTURE [PANEL REPLACEMENT]

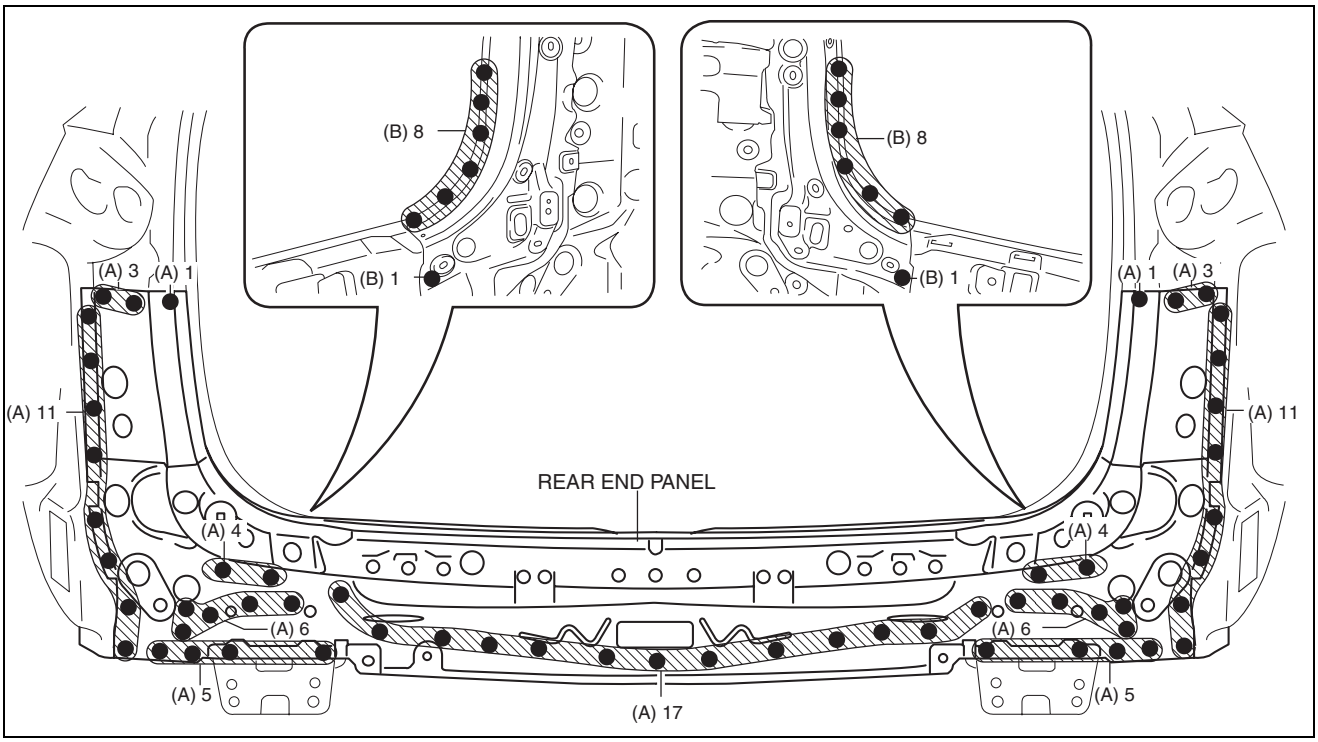

ac5uub00000037

3. Remove the rear end panel.

REAR END PANEL INSTALLATION [PANEL REPLACEMENT]

id098008744600

Symbol Mark

SYMBOL MARK	MEANING
■	PLUG WELDING (ARC WELDING)

ac5wzb00000226

Installation Procedure

1. When installing new parts, measure and adjust the body as necessary to conform with standard dimensions.
2. Drill holes for the plug welding before installing the new parts.
3. After temporarily installing new parts, make sure the related parts fit properly.
4. Plug weld the 77 locations indicated by (A) shown in the figure.
5. Plug weld the 18 locations indicated by (B) from room side shown in the figure, then install the rear end panel.

BODY STRUCTURE [PANEL REPLACEMENT]

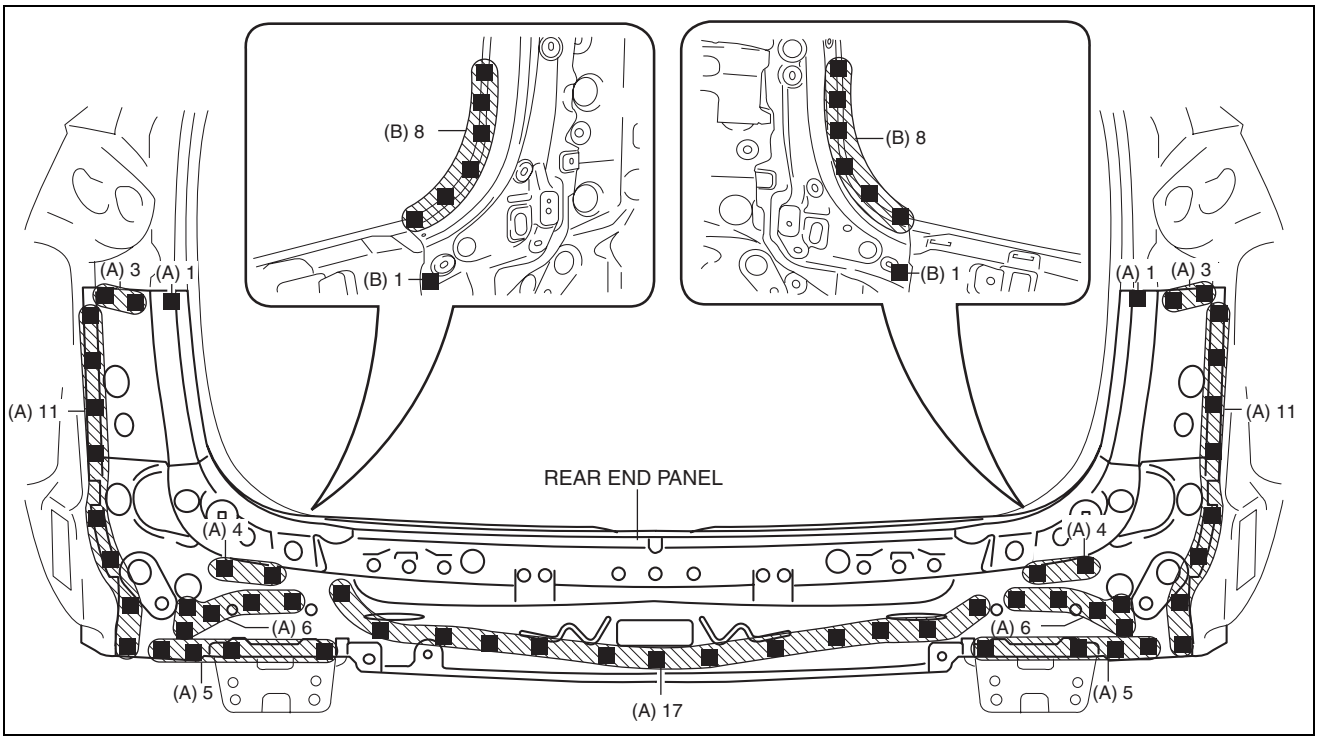

ac5uub00000036

REAR PILLAR (OUTER) REMOVAL [PANEL REPLACEMENT]

id098008747200

Symbol Mark

SYMBOL MARK	MEANING
●	SPOT WELDING
⎍	ROUGH CUT LOCATION

ac5wzb00000260

Removal Procedure

1. Rough cut area location indicated by (A) shown in the figure.
2. Drill the 10 locations indicated by (B) shown in the figure.

BODY STRUCTURE [PANEL REPLACEMENT]

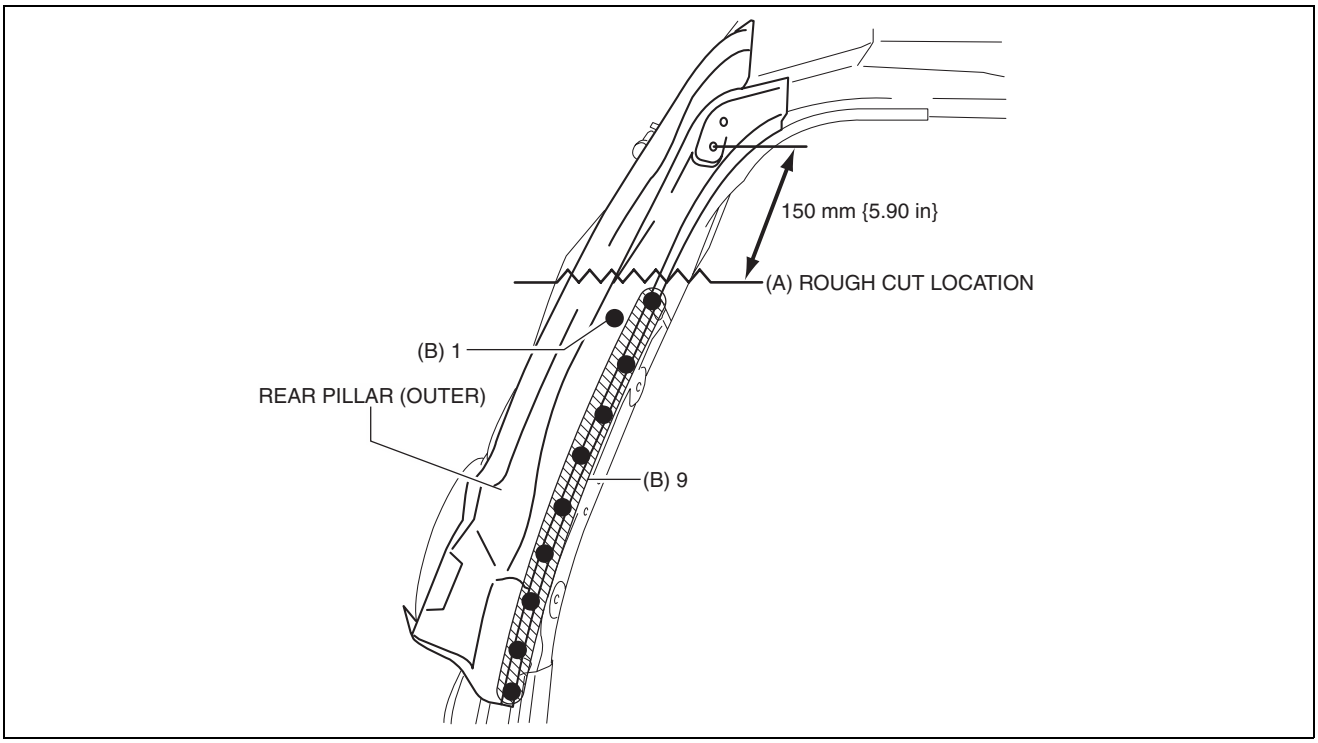

ac5wzb00000293

3. Remove the rear pillar (outer).

REAR PILLAR (OUTER) INSTALLATION [PANEL REPLACEMENT]

id098008747300

Symbol Mark

SYMBOL MARK	MEANING
●	SPOT WELDING
■	PLUG WELDING (ARC WELDING)
++++++++++++++++++++++++++++++++++	CONTINUOUS ARC WELDING (CUT-AND-JOIN LOCATION)

ac5wzb00000227

Installation Procedure

1. When installing new parts, measure and adjust the body as necessary to conform with standard dimensions.
2. Drill holes for the plug welding before installing the new parts.
3. After temporarily installing new parts, make sure the related parts fit properly.
4. Cut and join the area location indicated by (A) shown in the figure.
5. Plug weld the 1 location indicated by (B) shown in the figure.
6. Spot weld the 12 locations indicated by (C) shown in the figure, then install the rear pillar (outer).

BODY STRUCTURE [PANEL REPLACEMENT]

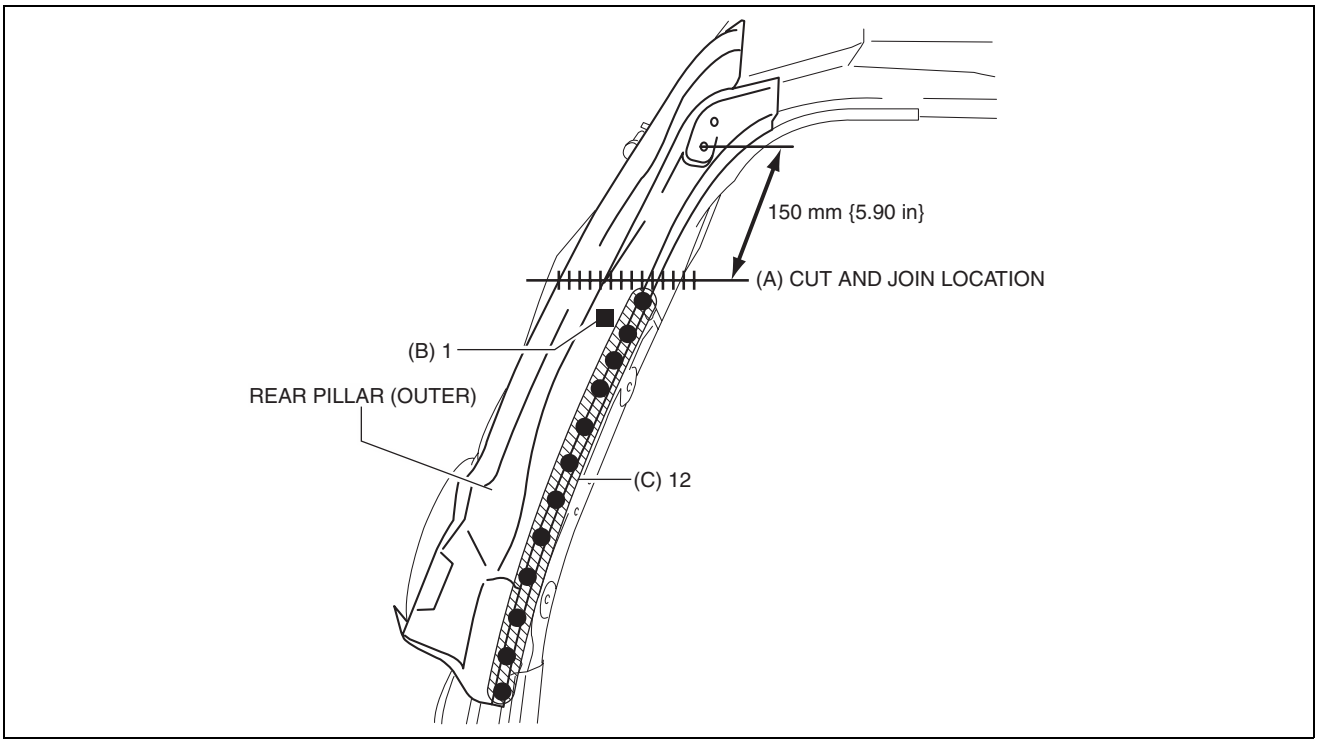

ac5wzb00000294

D-PILLAR REINFORCEMENT (LOWER) REMOVAL [PANEL REPLACEMENT]

id098008829300

Symbol Mark

SYMBOL MARK	MEANING
●	SPOT WELDING

ac5wzb00000086

Removal Procedure

1. Drill the 8 locations shown in the figure.

BODY STRUCTURE [PANEL REPLACEMENT]

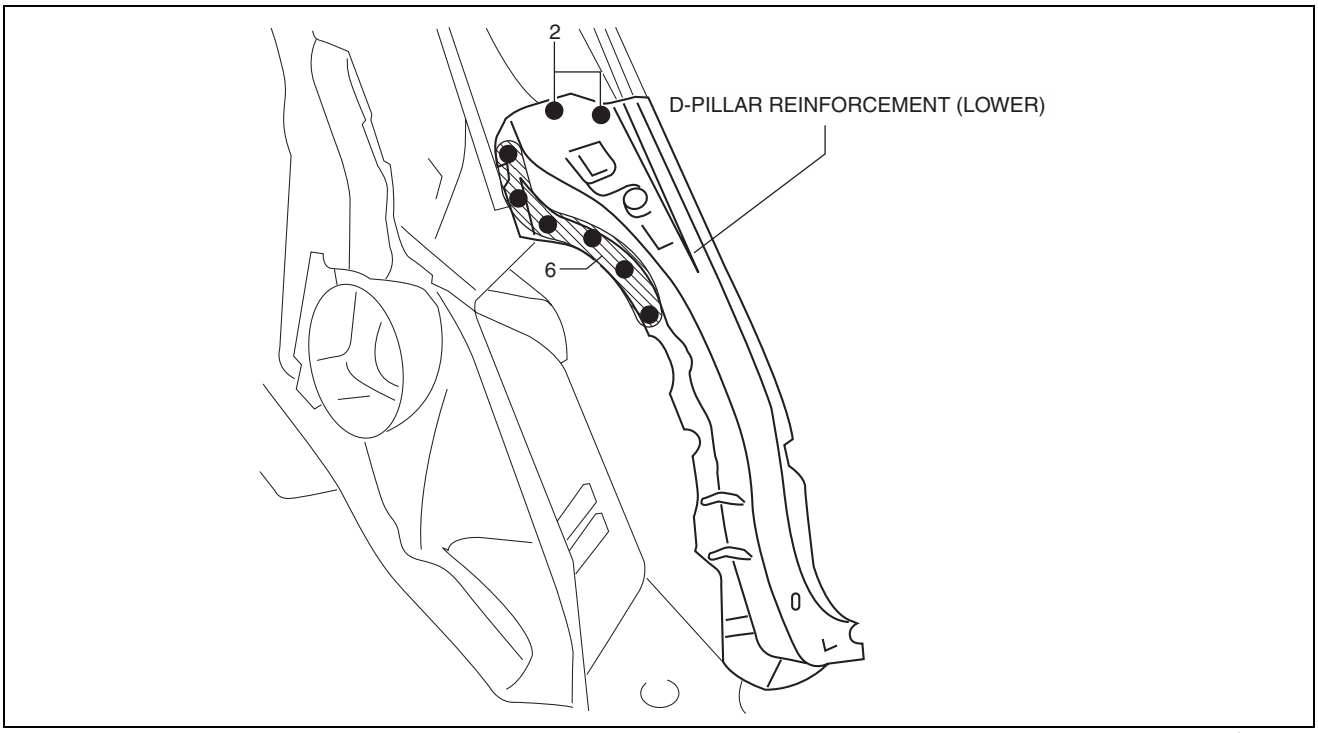

ac5wzb00000295

2. Remove the D-pillar reinforcement (lower).

D-PILLAR REINFORCEMENT (LOWER) INSTALLATION [PANEL REPLACEMENT]

id098008829400

Symbol Mark

SYMBOL MARK	MEANING
●	SPOT WELDING
■	PLUG WELDING (ARC WELDING)

ac5wzb00000230

Installation Procedure

1. When installing new parts, measure and adjust the body as necessary to conform with standard dimensions.
2. Drill holes for the plug welding before installing the new parts.
3. After temporarily installing new parts, make sure the related parts fit properly.
4. Plug weld the 2 locations indicated by (A) shown in the figure.
5. Spot weld the 8 locations indicated by (B) shown in the figure, then install the D-pillar reinforcement (lower).

BODY STRUCTURE [PANEL REPLACEMENT]

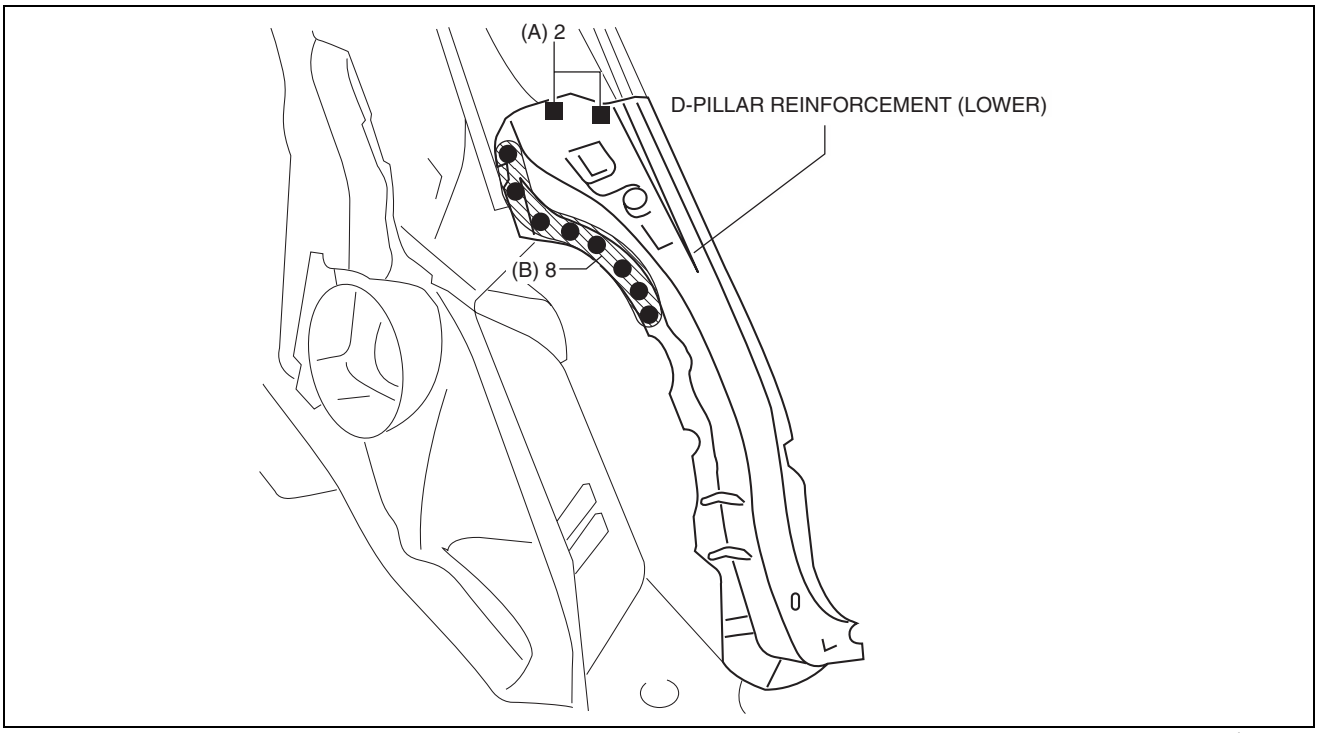

ac5wzb00000296

REAR SIDE PANEL REMOVAL [PANEL REPLACEMENT]

id098008829100

Symbol Mark

SYMBOL MARK	MEANING
●	SPOT WELDING

ac5wzb00000084

Removal Procedure

1. Drill the 11 locations shown in the figure.

BODY STRUCTURE [PANEL REPLACEMENT]

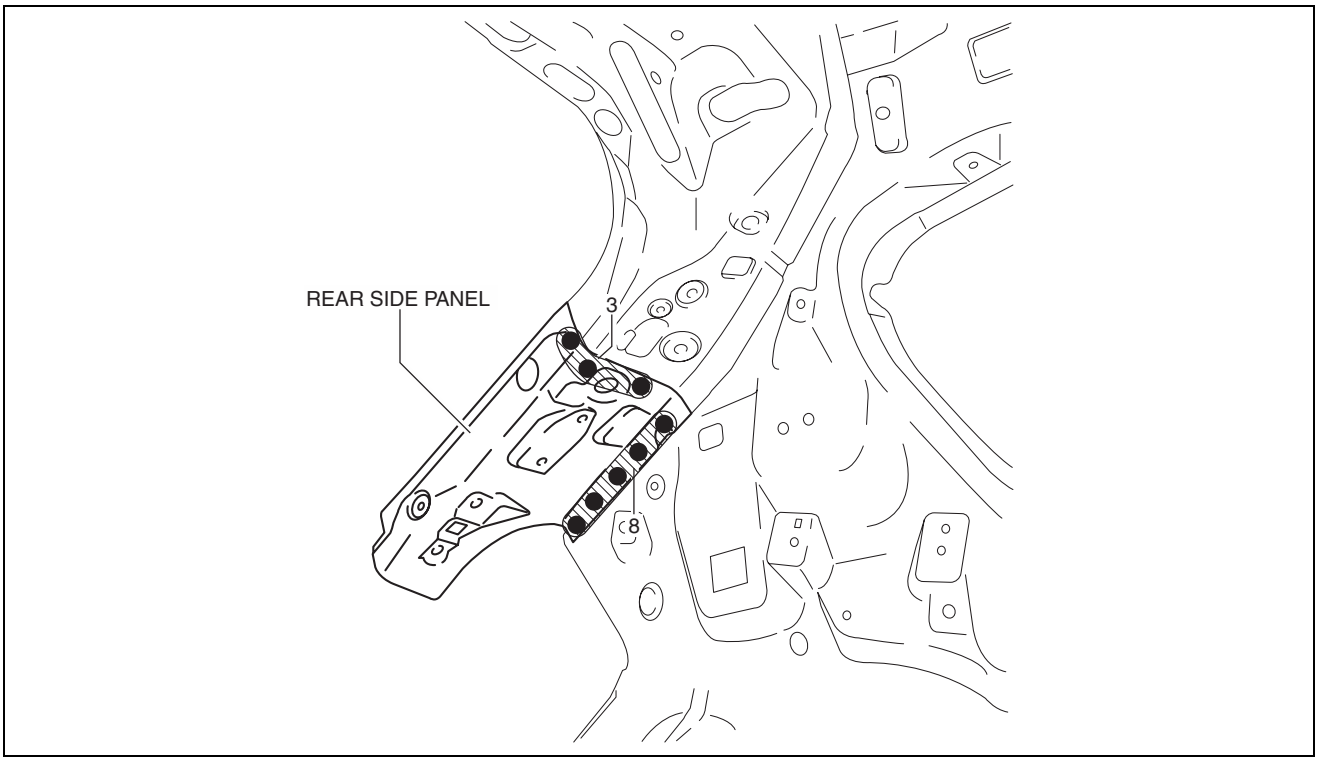

ac5wzb00000140

2. Remove the rear side panel.

REAR SIDE PANEL INSTALLATION [PANEL REPLACEMENT]

id098008829200

Symbol Mark

SYMBOL MARK	MEANING
■	PLUG WELDING (ARC WELDING)

ac5wzb00000229

Installation Procedure

1. When installing new parts, measure and adjust the body as necessary to conform with standard dimensions.
2. Drill holes for the plug welding before installing the new parts.
3. After temporarily installing new parts, make sure the related parts fit properly.
4. Plug weld the 11 locations shown in the figure, then install the rear side panel.

BODY STRUCTURE [PANEL REPLACEMENT]

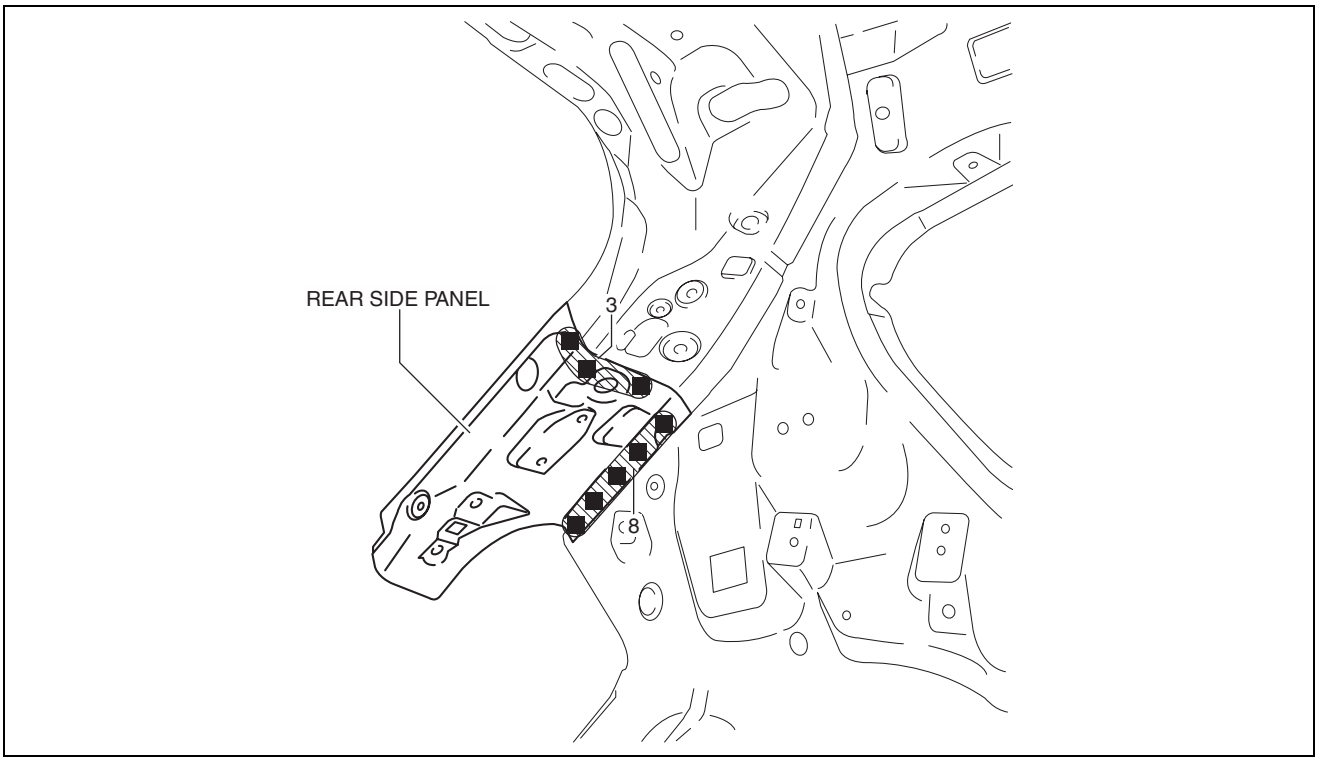

ac5wzb00000141

FLOOR SIDE PANEL REMOVAL [PANEL REPLACEMENT]

id098008618700

Symbol Mark

SYMBOL MARK	MEANING
●	SPOT WELDING

ac5wzb00000088

Removal Procedure

1. Drill the 35 locations indicated by (A) shown in the figure, then remove the floor side panel No.1.

BODY STRUCTURE [PANEL REPLACEMENT]

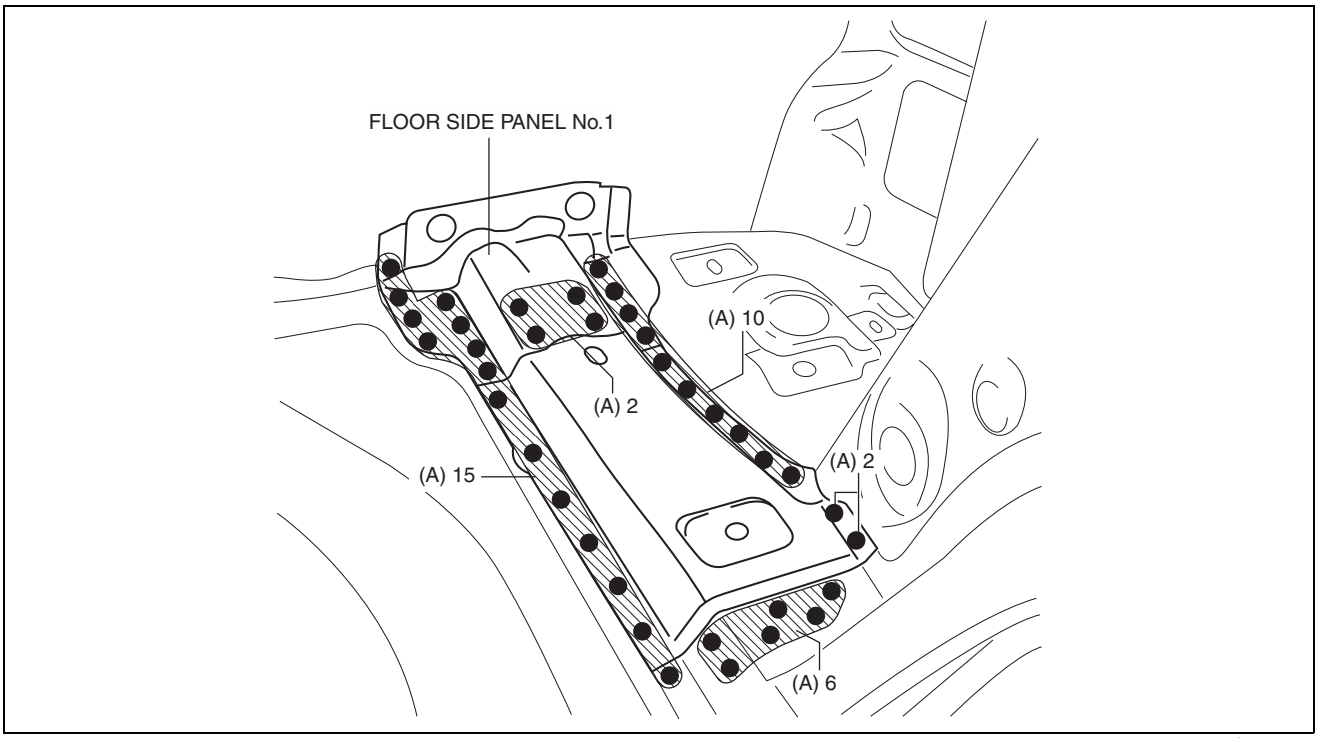

ac5wzb00000144

2. Drill the 5 locations indicated by (B) shown in the figure.
3. Drill the 4 locations indicated by (C) from rear wheel housing shown in the figure.

BODY STRUCTURE [PANEL REPLACEMENT]

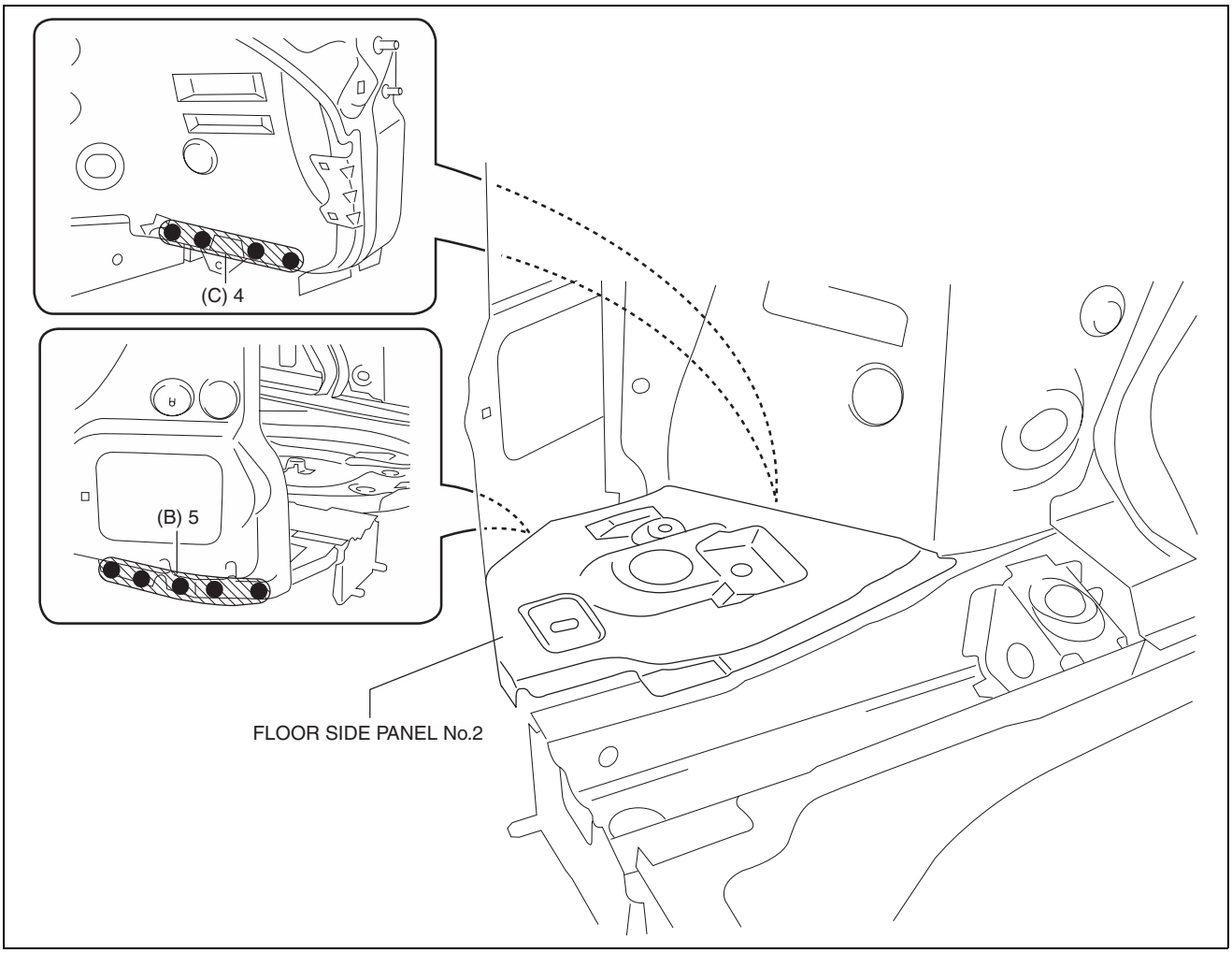

ac5wzb00000145

4. Remove the floor side panel No.2.

FLOOR SIDE PANEL INSTALLATION [PANEL REPLACEMENT]

id098008618800

Symbol Mark

SYMBOL MARK	MEANING
●	SPOT WELDING
■	PLUG WELDING (ARC WELDING)

ac5wzb00000224

Installation Procedure

1. When installing new parts, measure and adjust the body as necessary to conform with standard dimensions.
2. Drill holes for the plug welding before installing the new parts.
3. After temporarily installing new parts, make sure the related parts fit properly.
4. Spot weld the 7 locations indicated by (A) shown in the figure.
5. Spot weld the 5 locations indicated by (B) shown in the figure, then install the floor side panel No.2.

BODY STRUCTURE [PANEL REPLACEMENT]

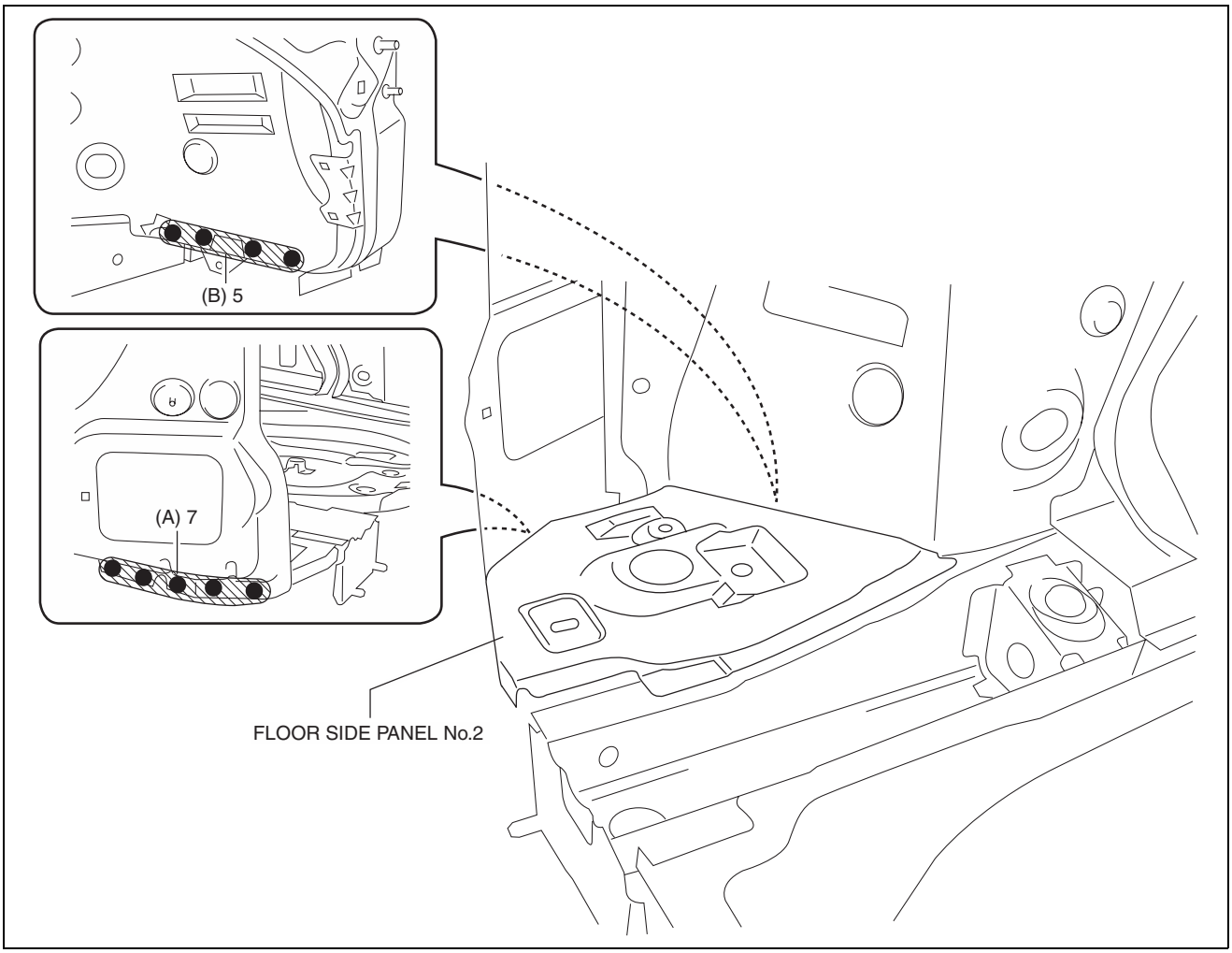

ac5wzb00000263

6. Plug weld the 35 locations indicated by (C) shown in the figure, then install the floor side panel No.1.

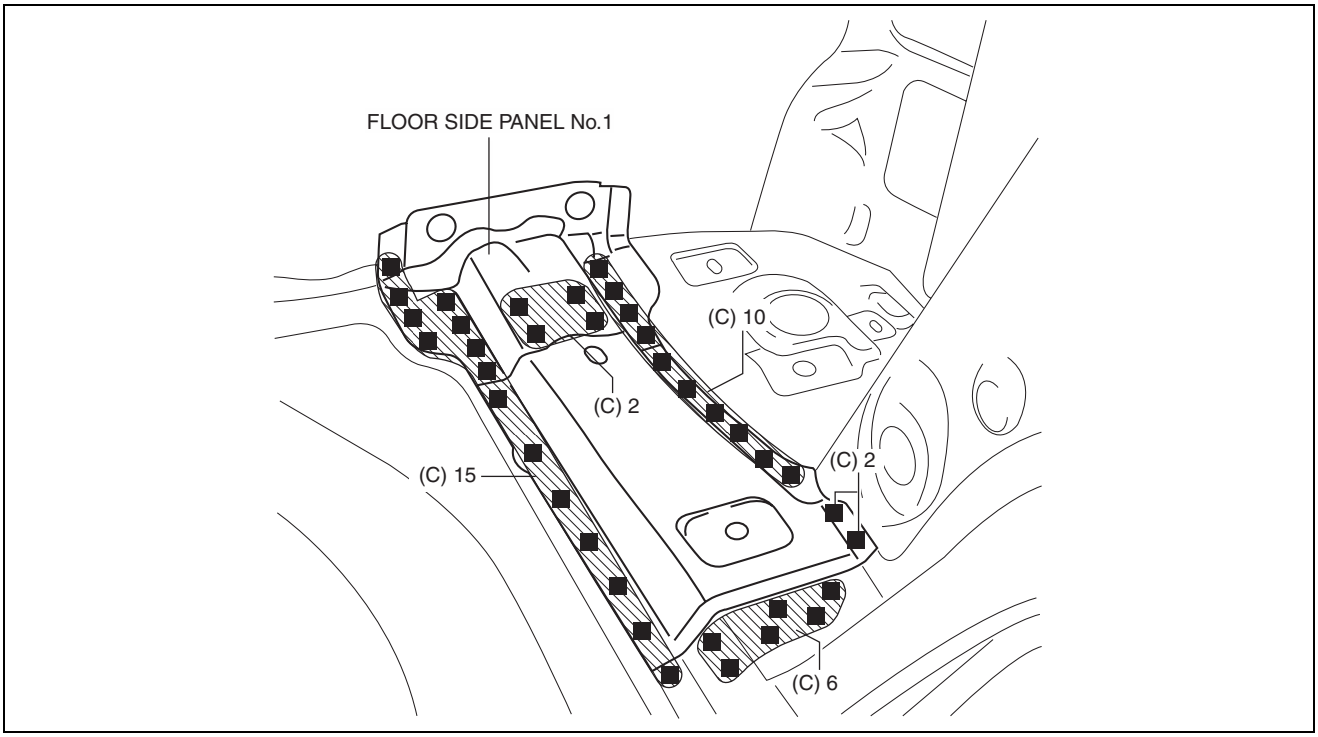

ac5wzb00000147

BODY STRUCTURE [PANEL REPLACEMENT]

TRUNK FLOOR PANEL REMOVAL [PANEL REPLACEMENT]

id098008829500

Symbol Mark

SYMBOL MARK	MEANING
●	SPOT WELDING

ac5wzb00000090

Removal Procedure

1. Drill the 96 locations shown in the figure.

Caution

- **When drilling the 96 locations shown in the figure, do not drill a hole all the way through or there could be a problem when installing the new part.**

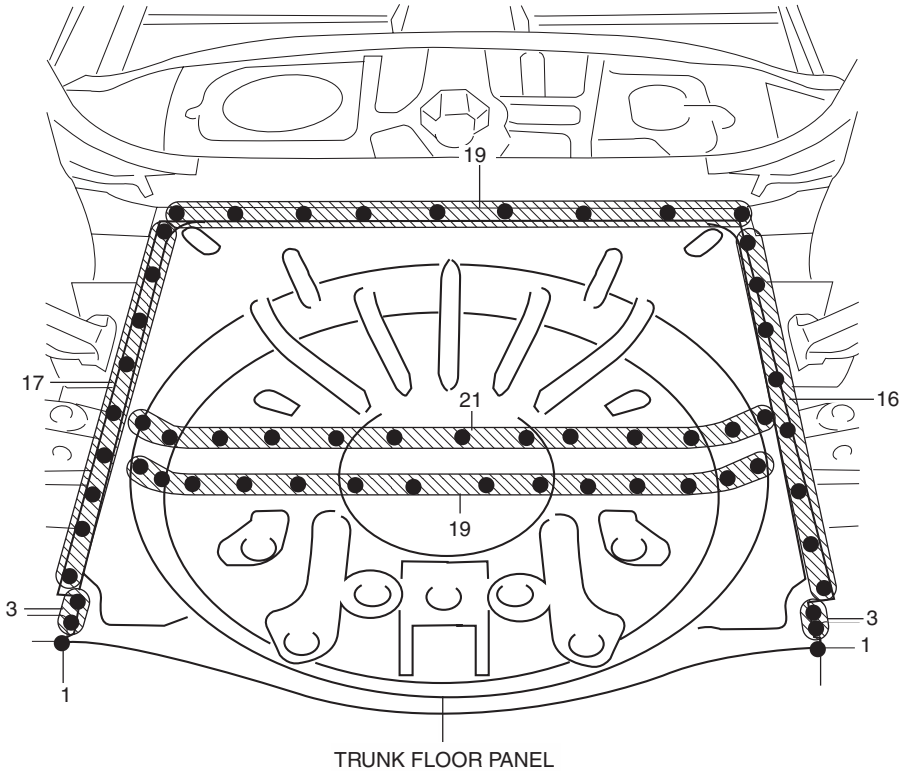

ac5wzb00000142

2. Remove the trunk floor panel.

TRUNK FLOOR PANEL INSTALLATION [PANEL REPLACEMENT]

id098008829600

Symbol Mark

SYMBOL MARK	MEANING
■	PLUG WELDING (ARC WELDING)

ac5wzb00000231

Installation Procedure

1. When installing new parts, measure and adjust the body as necessary to conform with standard dimensions.
2. Drill holes for the plug welding before installing the new parts.
3. After temporarily installing new parts, make sure the related parts fit properly.
4. Slide the part of trunk floor panel in the direction of arrow shown in the figure, and then insert it.

BODY STRUCTURE [PANEL REPLACEMENT]

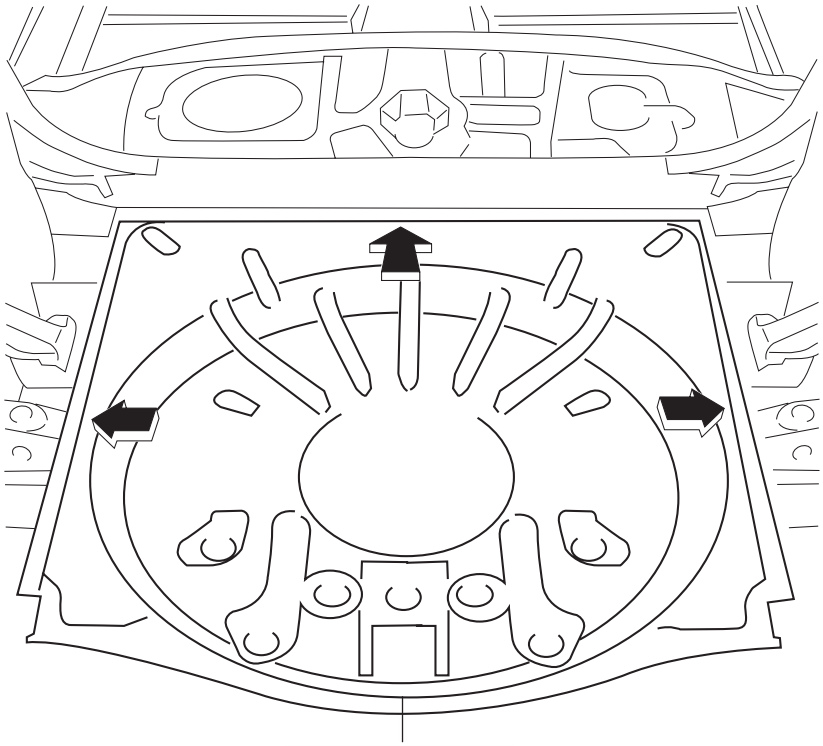

ac5wzb00000148

5. Plug weld the 96 locations shown in the figure, then install the trunk floor panel.

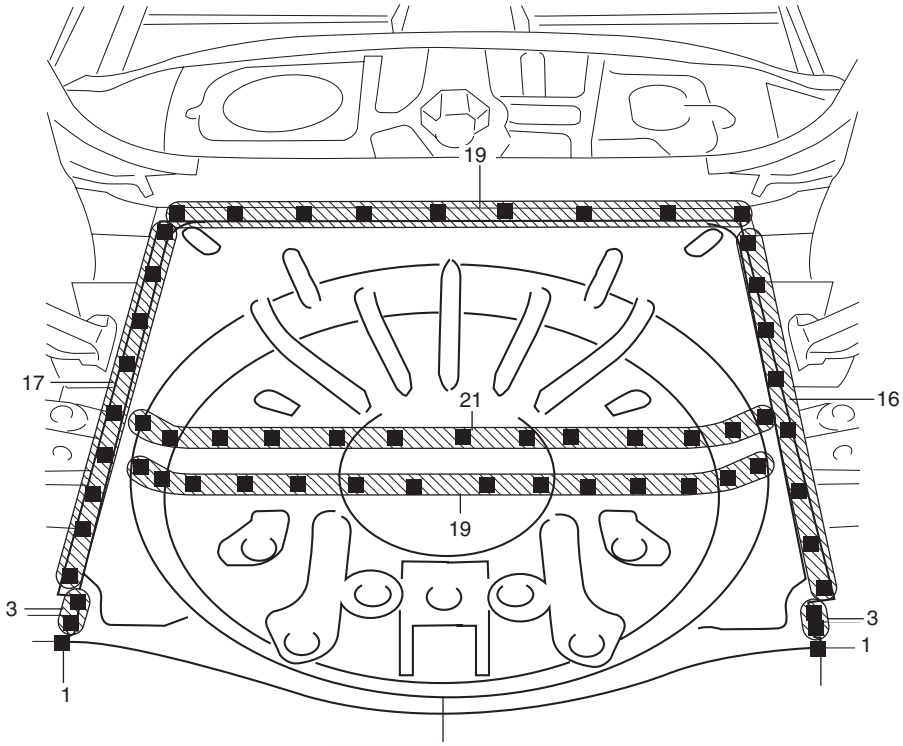

ac5wzb00000143

BODY STRUCTURE [PANEL REPLACEMENT]

REAR SIDE FRAME REMOVAL [PANEL REPLACEMENT]

id098008801200

Symbol Mark

SYMBOL MARK	MEANING
●	SPOT WELDING
⁓⁓⁓⁓⁓⁓⁓⁓⁓⁓⁓⁓	ROUGH CUT LOCATION

ac5wzb00000092

Removal Procedure

Note

- When drilling the 35 locations indicated by (A) and 4 locations indicated by (C) shown in the figure, do not drill a hole all the way through or there could be a problem when installing the new part.

1. Drill the 35 locations indicated by (A) shown in the figure, then remove the floor side panel No.1.

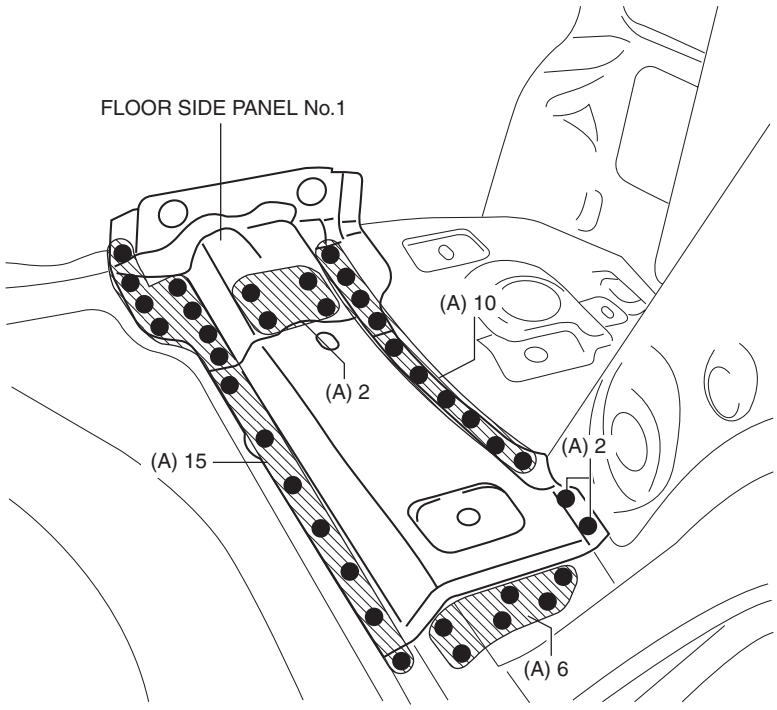

ac5wzb00000149

2. Rough cut area location indicated by (B) shown in the figure.

BODY STRUCTURE [PANEL REPLACEMENT]

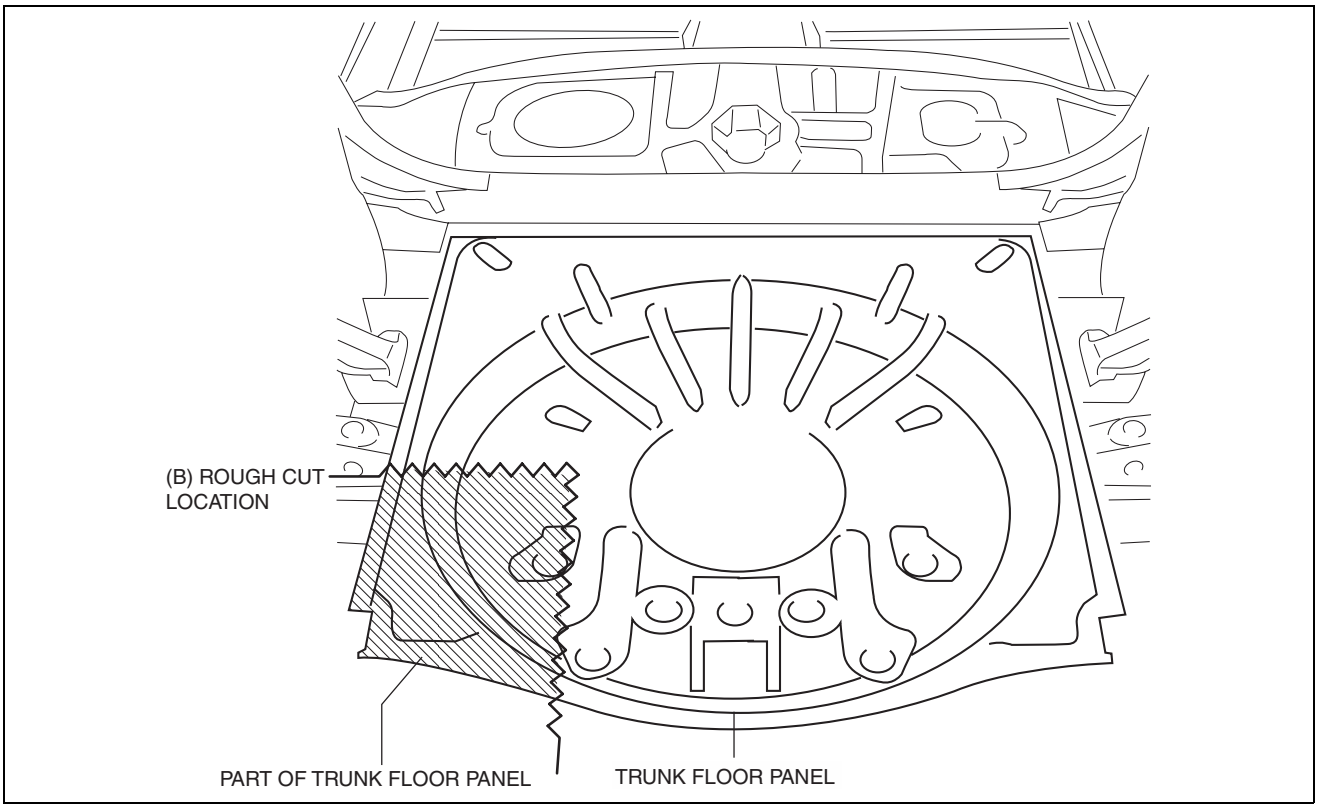

ac5wzb00000321

3. Drill the 4 locations indicated by (C) shown in the figure, then remove the part of trunk floor panel.

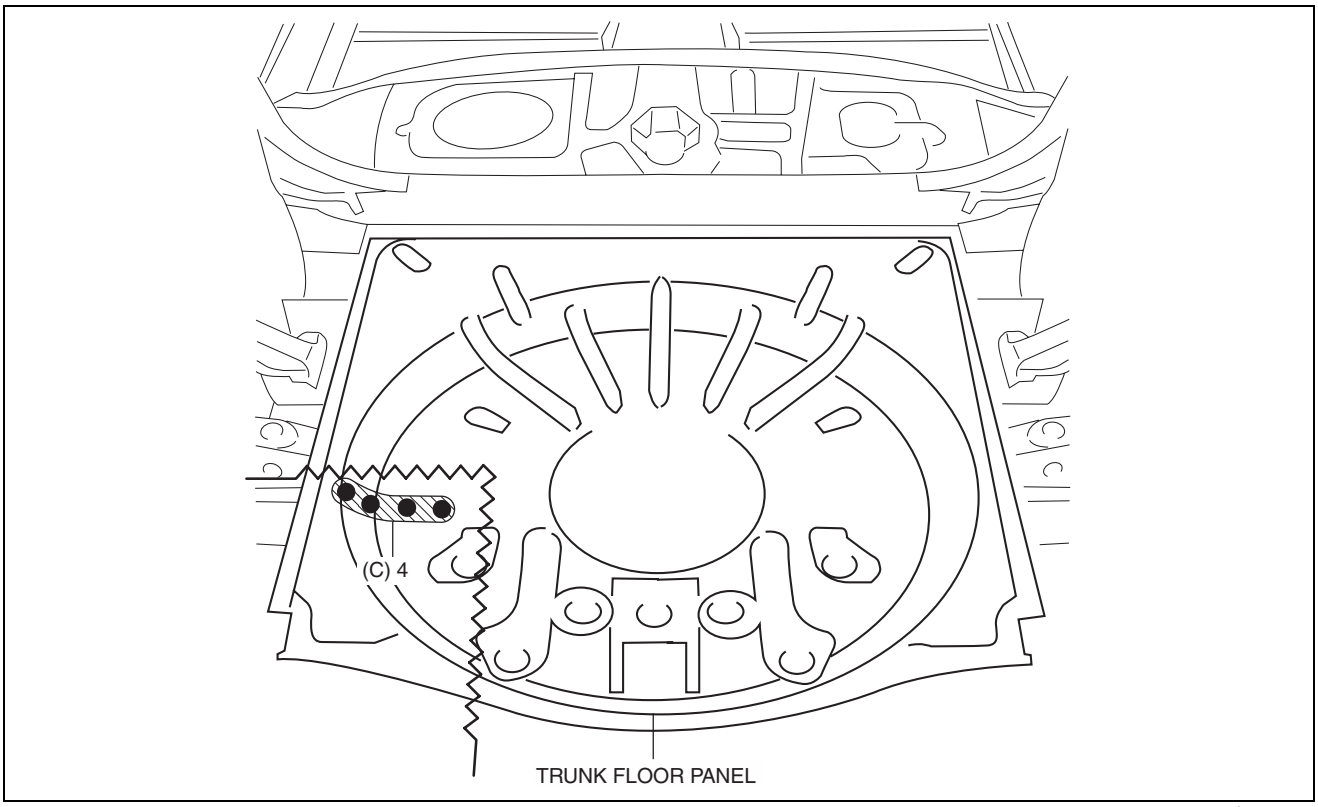

ac5wzb00000328

4. Drill the 8 locations indicated by (D) shown in the figure.

BODY STRUCTURE [PANEL REPLACEMENT]

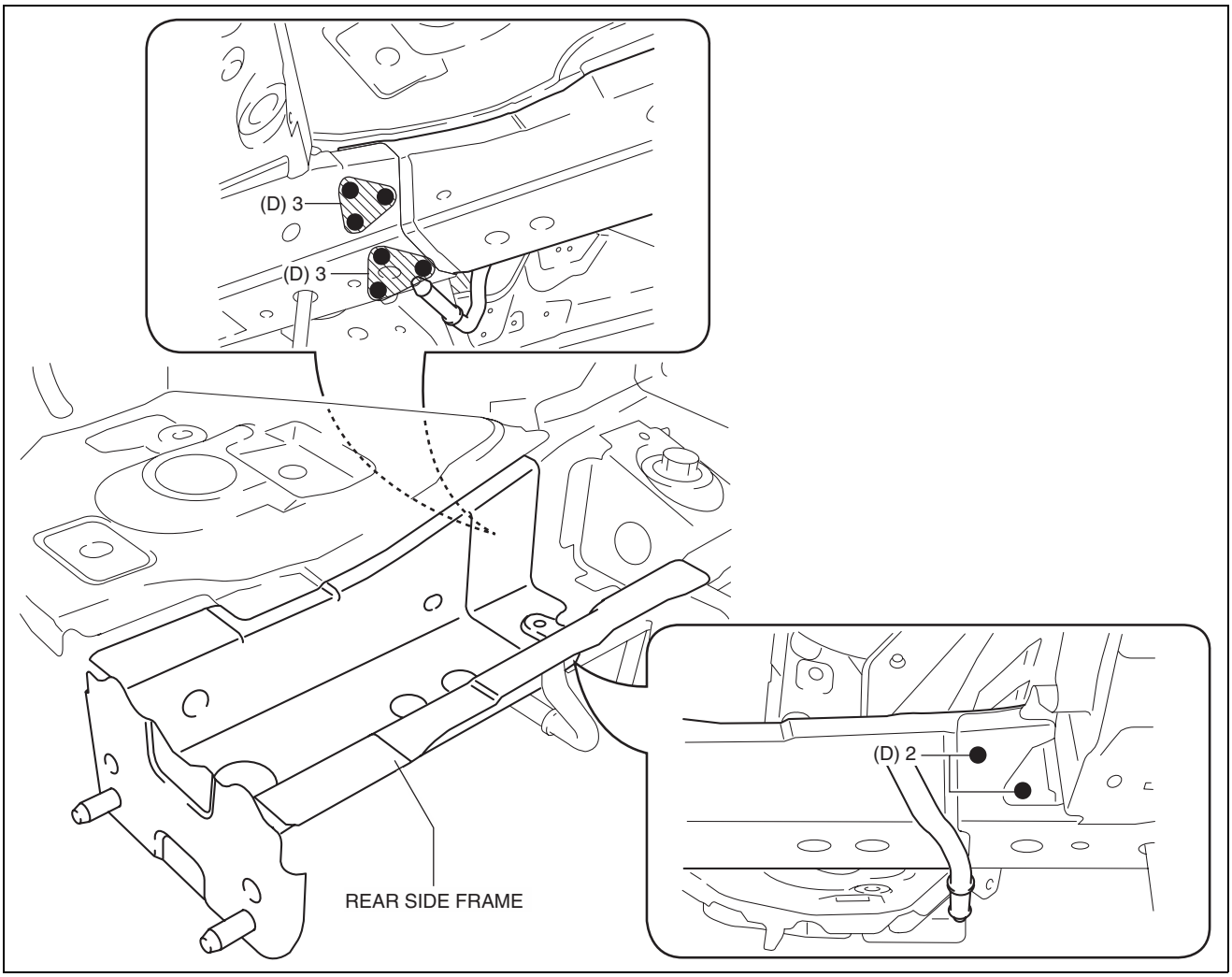

ac5wzb00000152

5. Remove the rear side frame.

REAR SIDE FRAME INSTALLATION [PANEL REPLACEMENT]

id098008801300

Symbol Mark

SYMBOL MARK	MEANING
■	PLUG WELDING (ARC WELDING)

BODY STRUCTURE [PANEL REPLACEMENT]

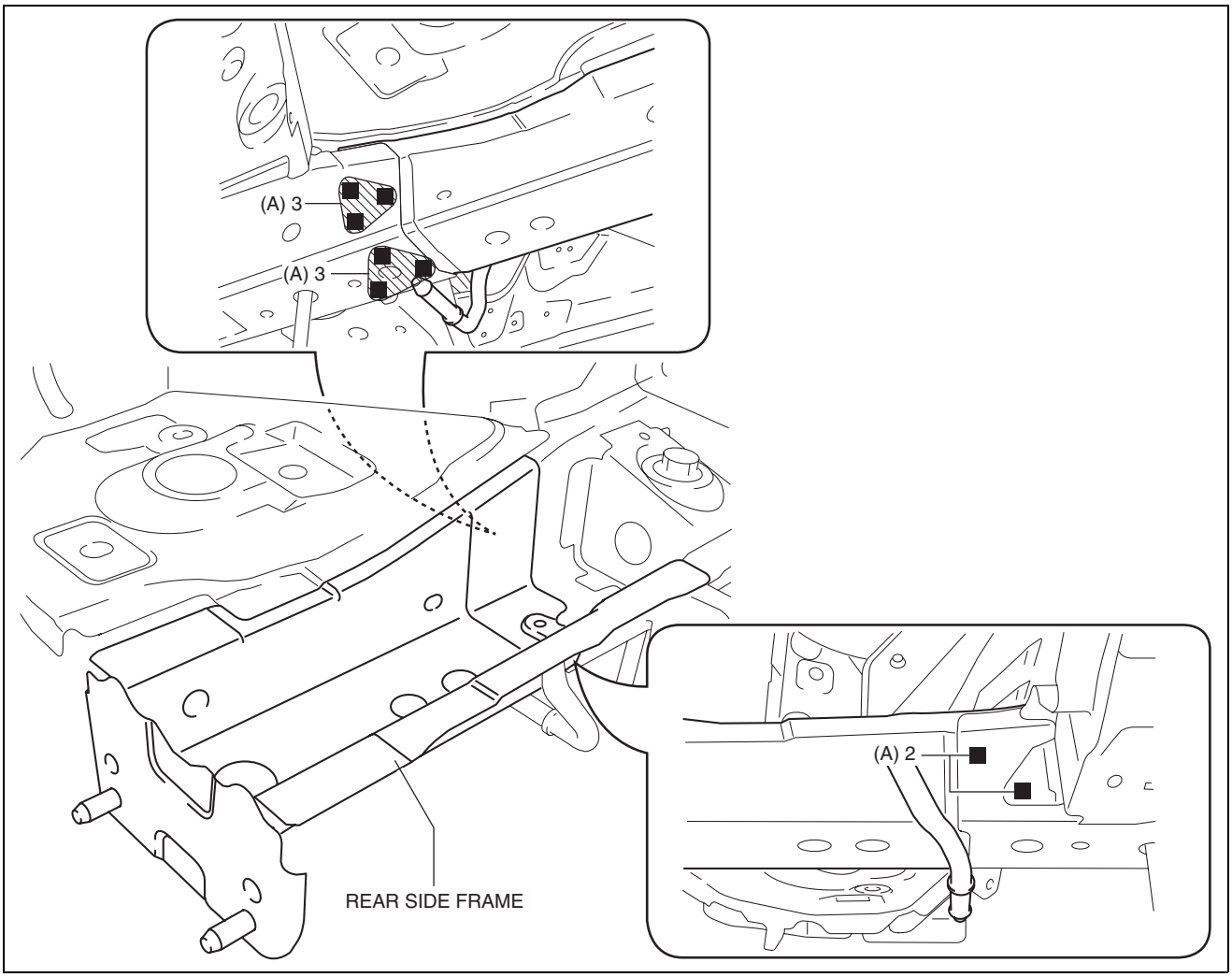

ac5wzb00000153

5. Cut and join the area location indicated by (B) shown in the figure.

BODY STRUCTURE [PANEL REPLACEMENT]

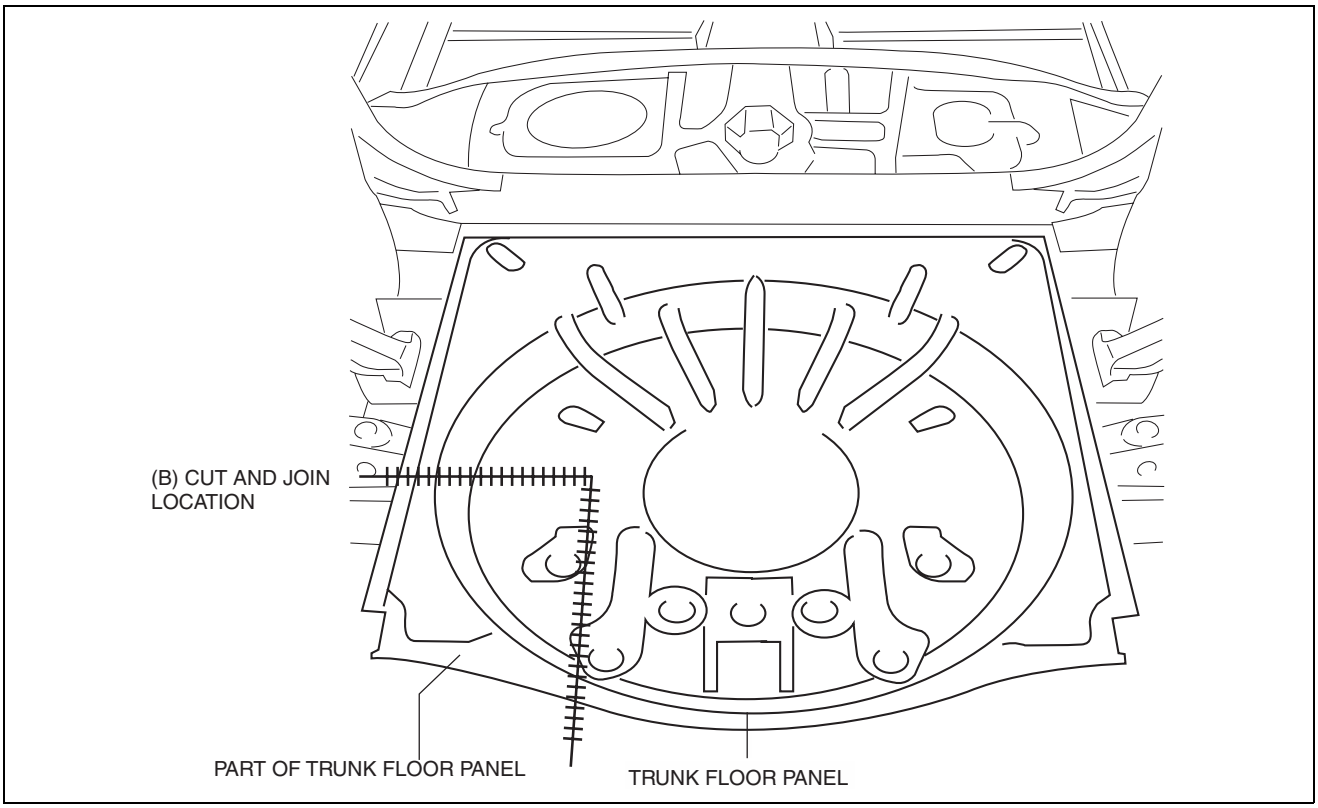

ac5wzb00000322

6. Plug weld the 4 locations indicated by (C) shown in the figure, then install the part of trunk floor panel.

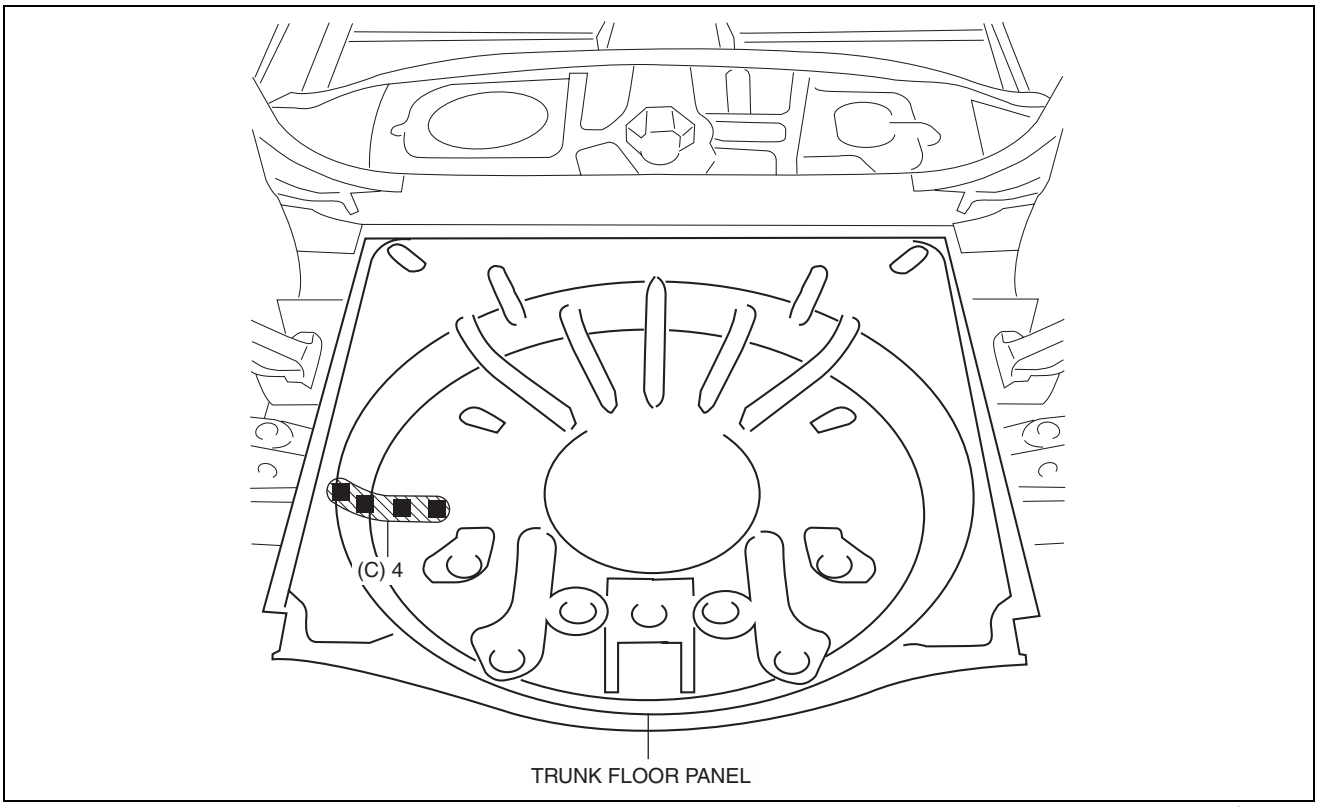

ac5wzb00000311

7. Plug weld the 35 locations indicated by (D) shown in the figure, then install the floor side panel No.2.

BODY STRUCTURE [PANEL REPLACEMENT]

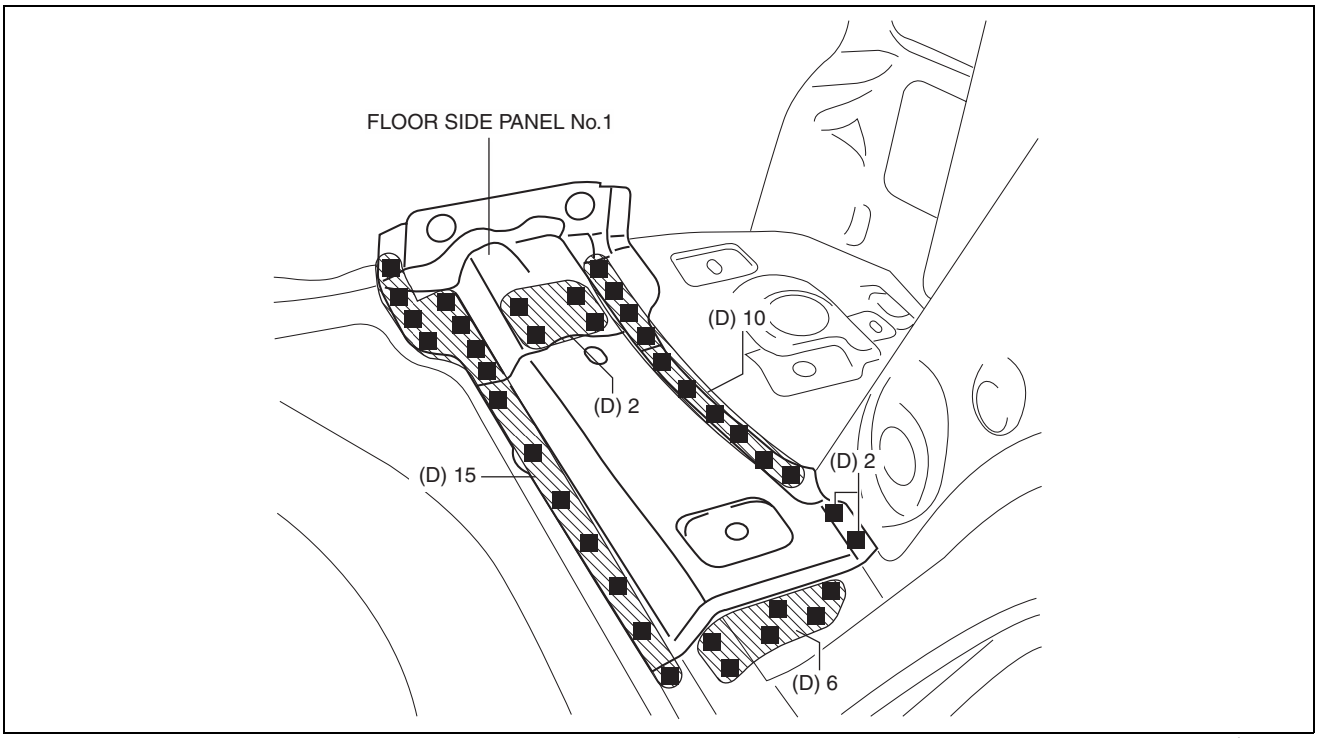

ac5wzb00000156

ROOF PANEL REMOVAL [PANEL REPLACEMENT]

id098008744300

Symbol Mark

SYMBOL MARK	MEANING
●	SPOT WELDING

ac5wzb00000094

Removal Procedure

1. Drill the 116 locations shown in the figure.

BODY STRUCTURE [PANEL REPLACEMENT]

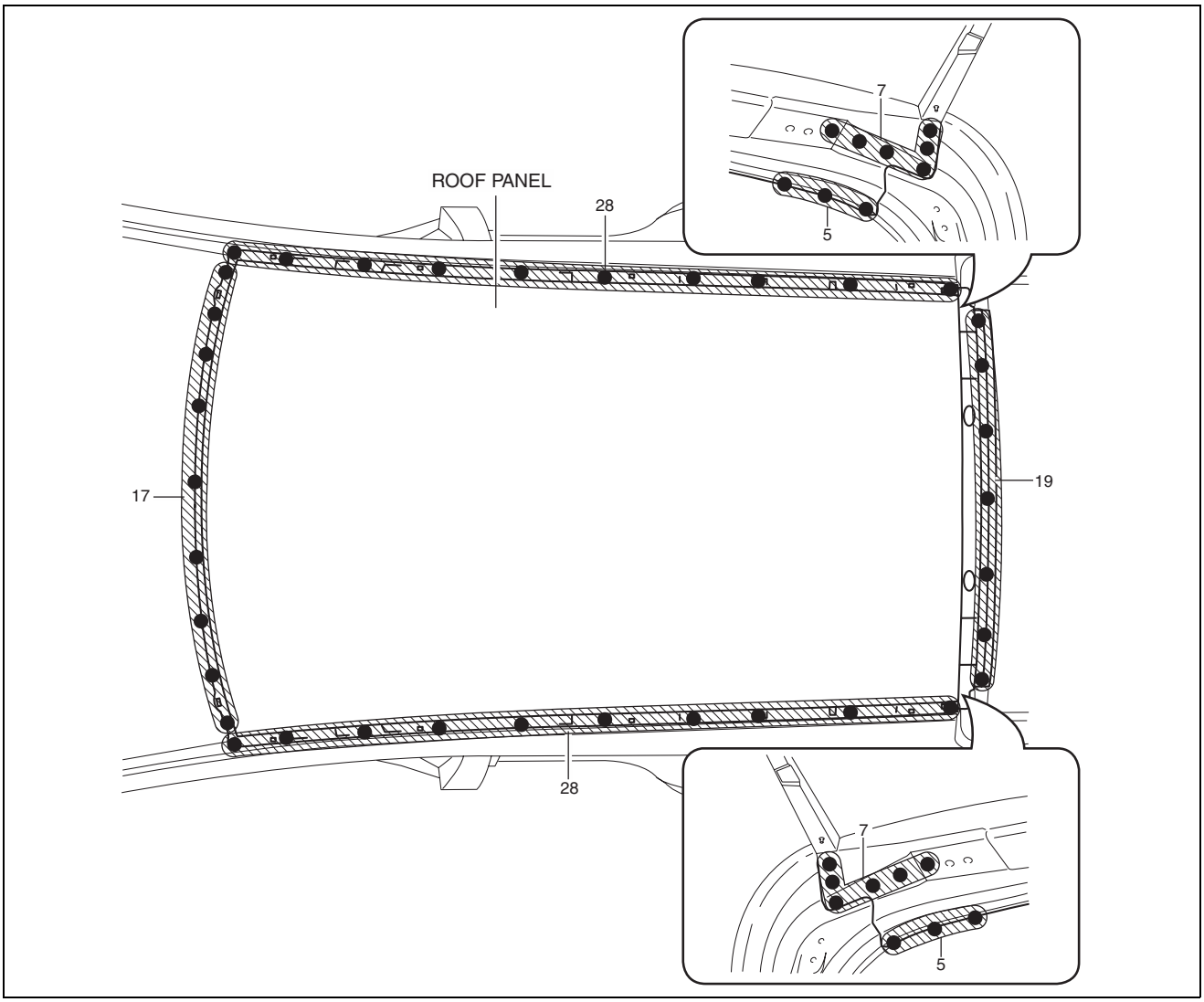

ac5uub00000034

2. Remove the roof panel.

ROOF PANEL INSTALLATION [PANEL REPLACEMENT]

id098008744400

Symbol Mark

SYMBOL MARK	MEANING
●	SPOT WELDING
■	PLUG WELDING (ARC WELDING)

ac5wzb00000225

Installation Procedure

1. When installing new parts, measure and adjust the body as necessary to conform with standard dimensions.
2. Drill holes for the plug welding before installing the new parts.
3. After temporarily installing new parts, make sure the related parts fit properly.
4. Apply the body sealer to the position shown in the figure.

BODY STRUCTURE [PANEL REPLACEMENT]

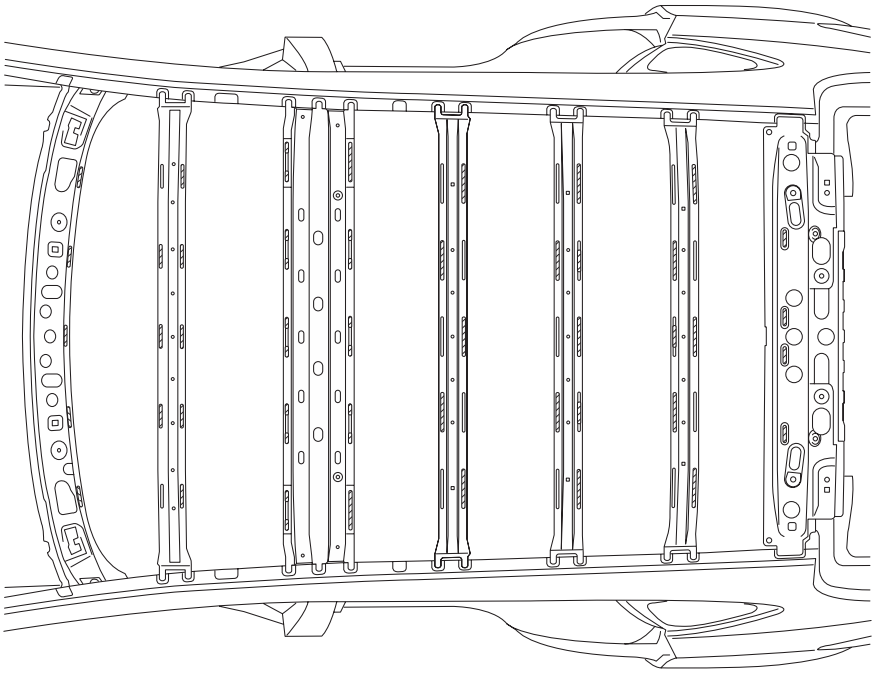

ac5wzb00000159

5. Plug weld the 83 locations indicated by (A) shown in the figure.
6. Spot weld the 47 locations indicated by (B) shown in the figure, then install the roof panel.

BODY STRUCTURE [PANEL REPLACEMENT]

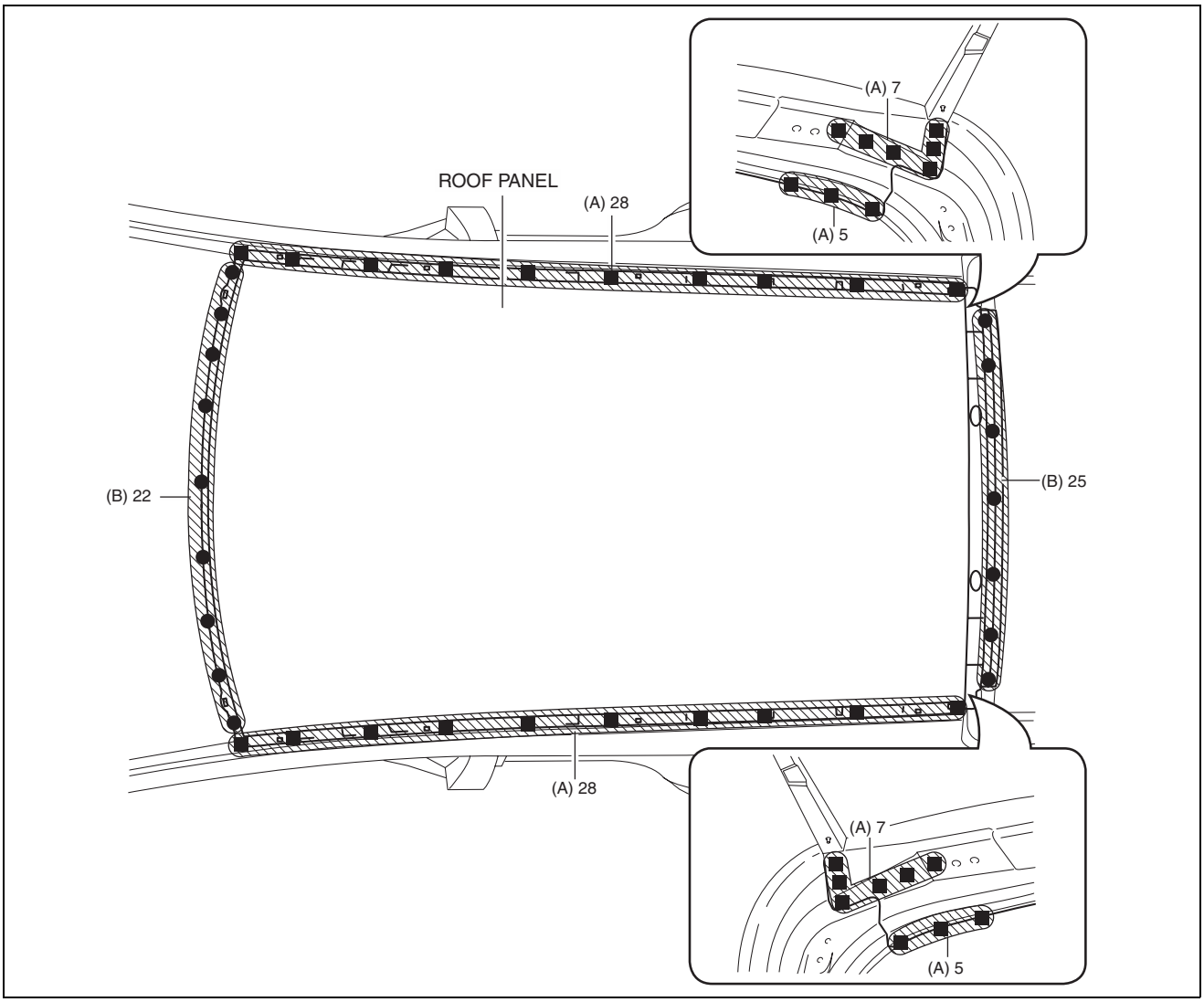

ac5uub00000035

09-80C BODY STRUCTURE [WATER-PROOF AND RUST PREVENTIVE]

BODY SEALING [WATER-PROOF AND RUST PREVENTIVE] 09-80C–1
UNDER COATING [WATER-PROOF AND RUST PREVENTIVE] 09-80C–4
RUST PREVENTIVE TREATMENT [WATER-PROOF AND RUST PREVENTIVE] 09-80C–6
DUMPING SHEET REPLACEMENT [WATER-PROOF AND RUST PREVENTIVE] 09-80C–7

BODY STRUCTURE [WATER-PROOF AND RUST PREVENTIVE]

BODY SEALING [WATER-PROOF AND RUST PREVENTIVE]

id098009739800

Sealant is applied to the parts where the panels meet and to the hemmed parts of the door panel and bonnet panel to provide water proofing and rust proofing.

BODY STRUCTURE [WATER-PROOF AND RUST PREVENTIVE]

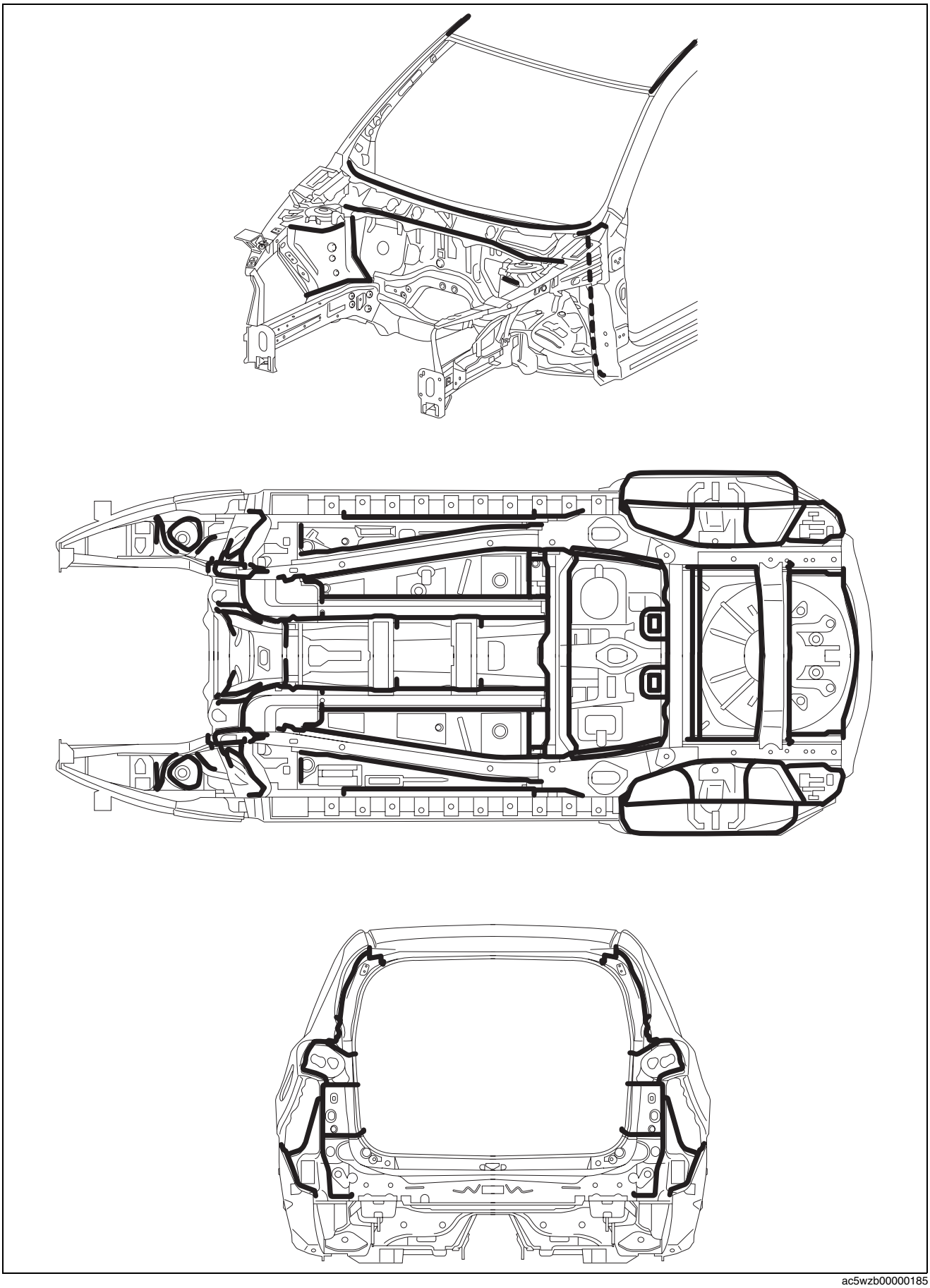

ac5wzb00000185

BODY STRUCTURE [WATER-PROOF AND RUST PREVENTIVE]

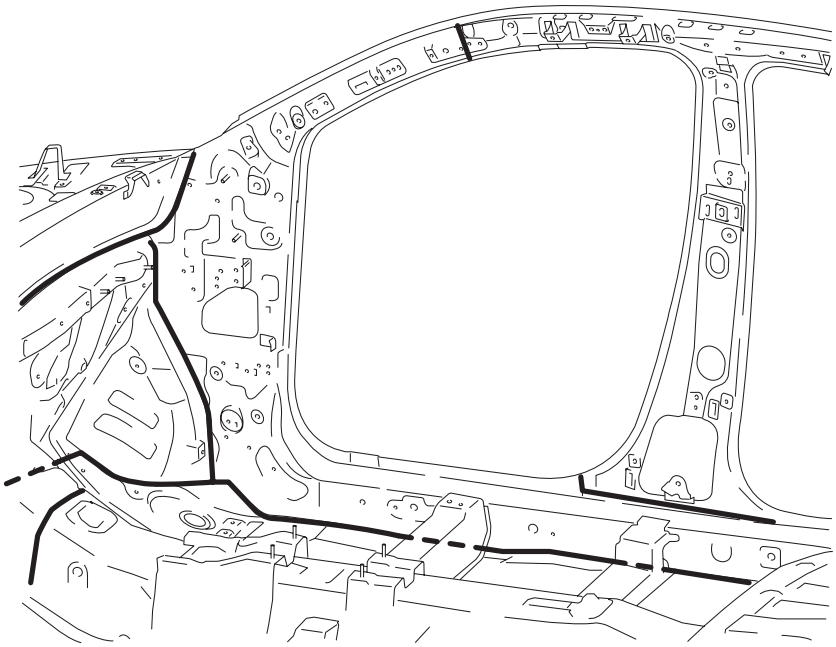

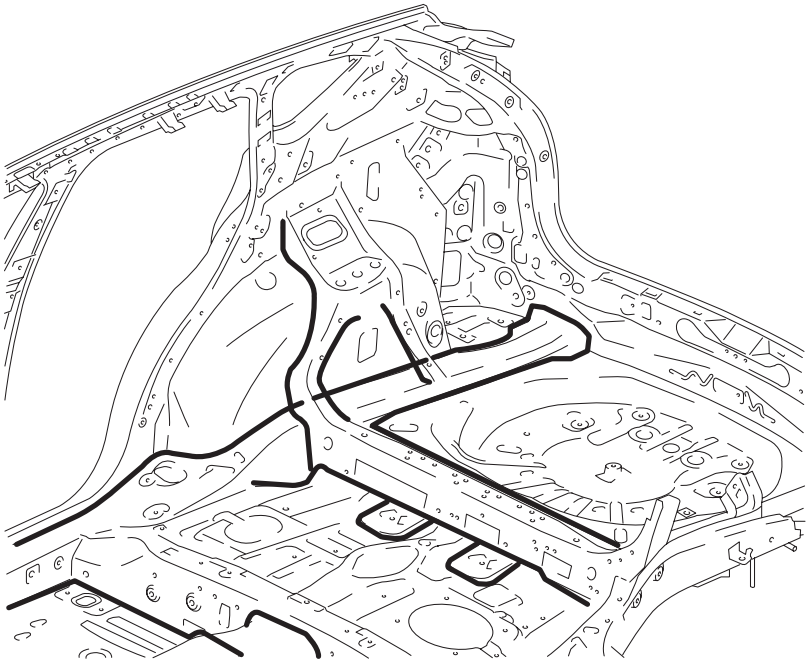

ac5wzb00000186

BODY STRUCTURE [WATER-PROOF AND RUST PREVENTIVE]

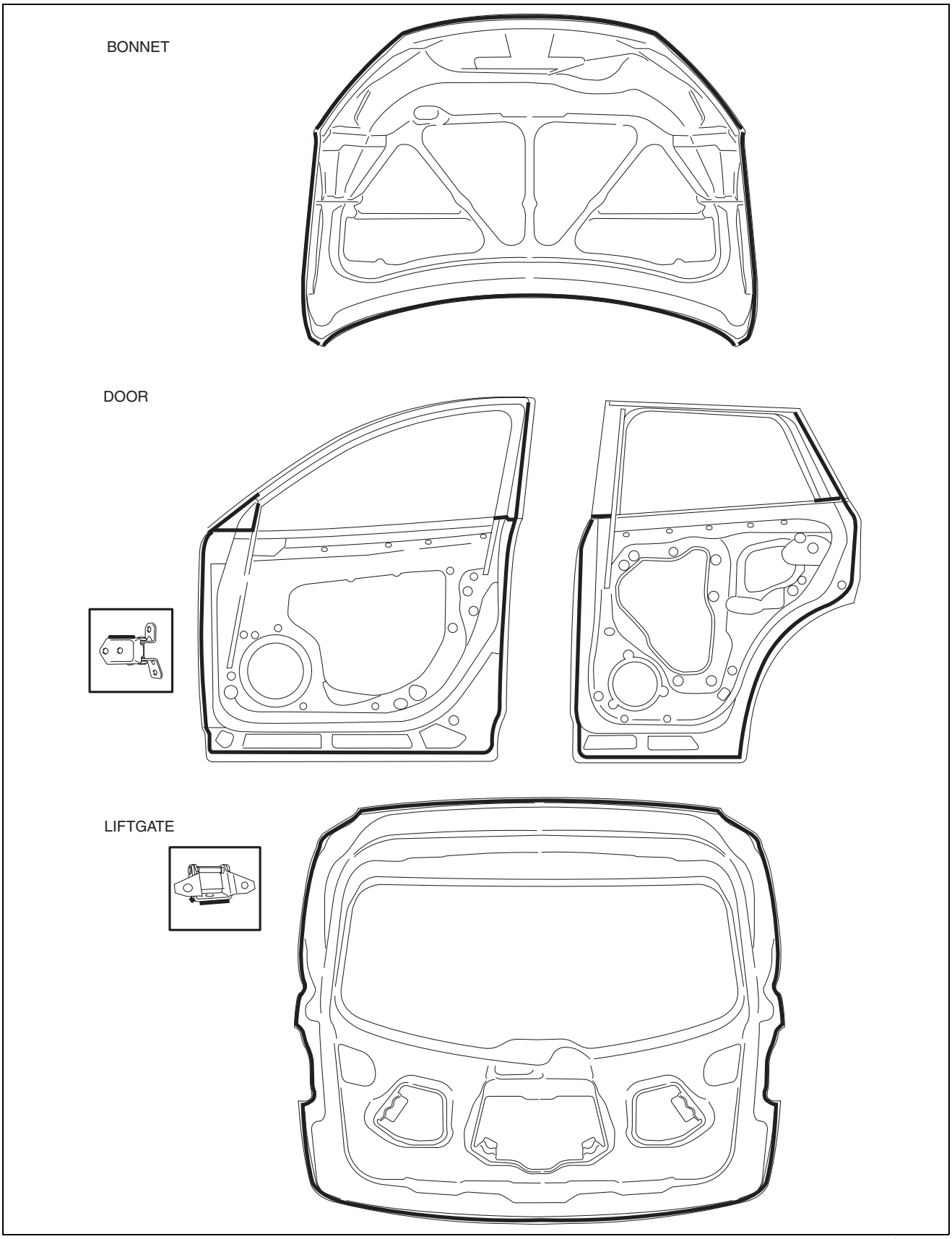

ac5wzb00000187

UNDER COATING [WATER-PROOF AND RUST PREVENTIVE]

id098009739900

- The shaded areas indicated under body locations that are undercoated to prevent noise and rusting.

BODY STRUCTURE [WATER-PROOF AND RUST PREVENTIVE]

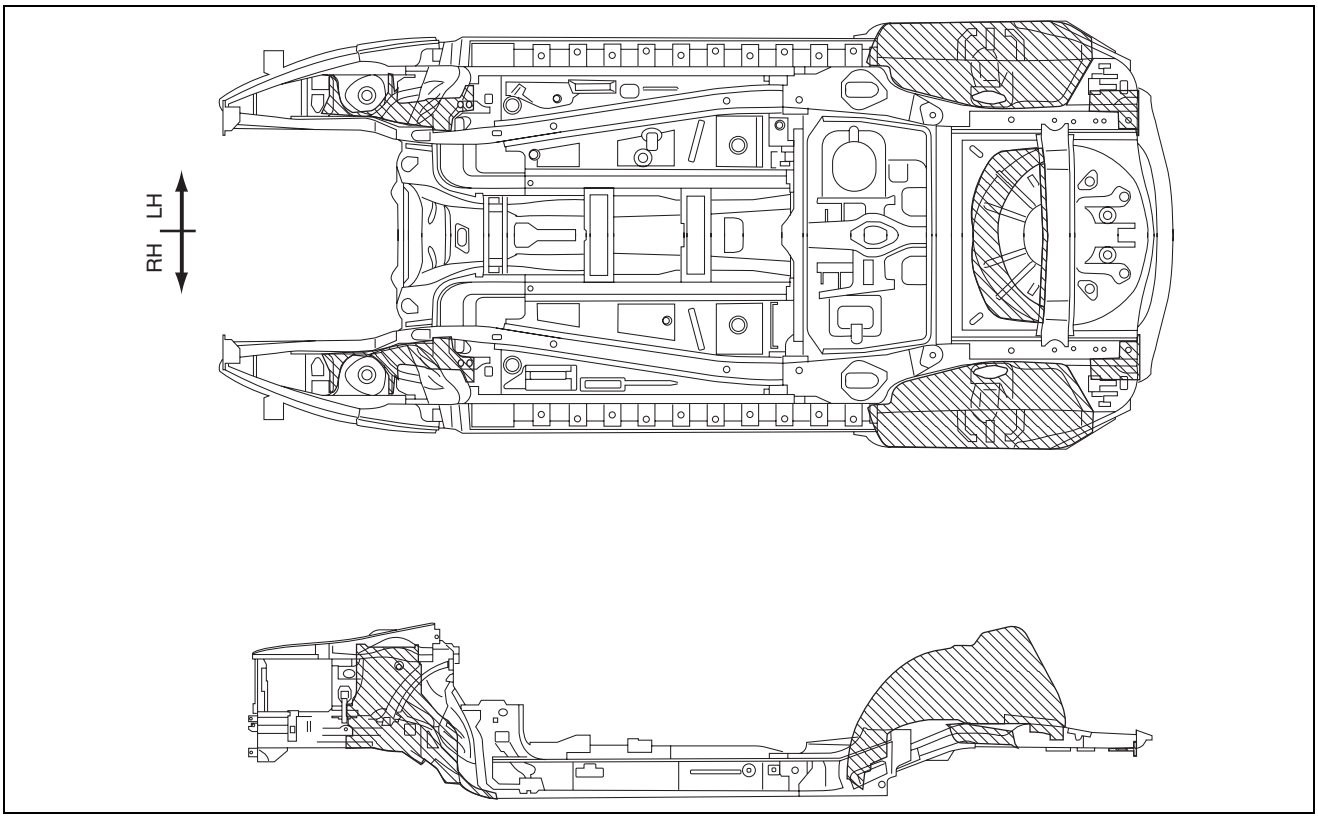

ac5wzb00000188

BODY STRUCTURE [WATER-PROOF AND RUST PREVENTIVE]

RUST PREVENTIVE TREATMENT [WATER-PROOF AND RUST PREVENTIVE]

id098009740100

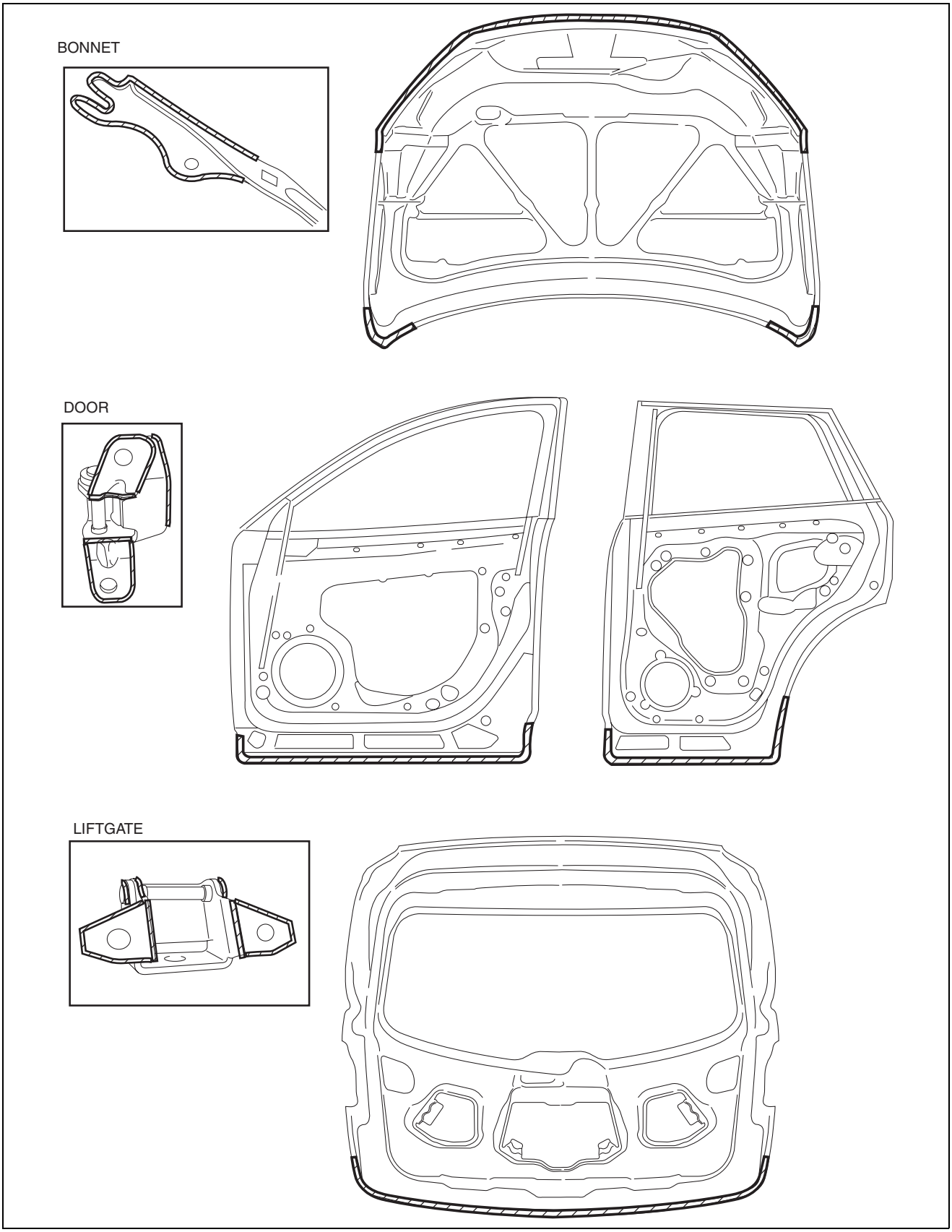

ac5wzb00000189

BODY STRUCTURE [WATER-PROOF AND RUST PREVENTIVE]

DUMPING SHEET REPLACEMENT [WATER-PROOF AND RUST PREVENTIVE]

id098009745700

- After repairing the body, attach the dumping sheet to the location shown in the figure for noise insulation.

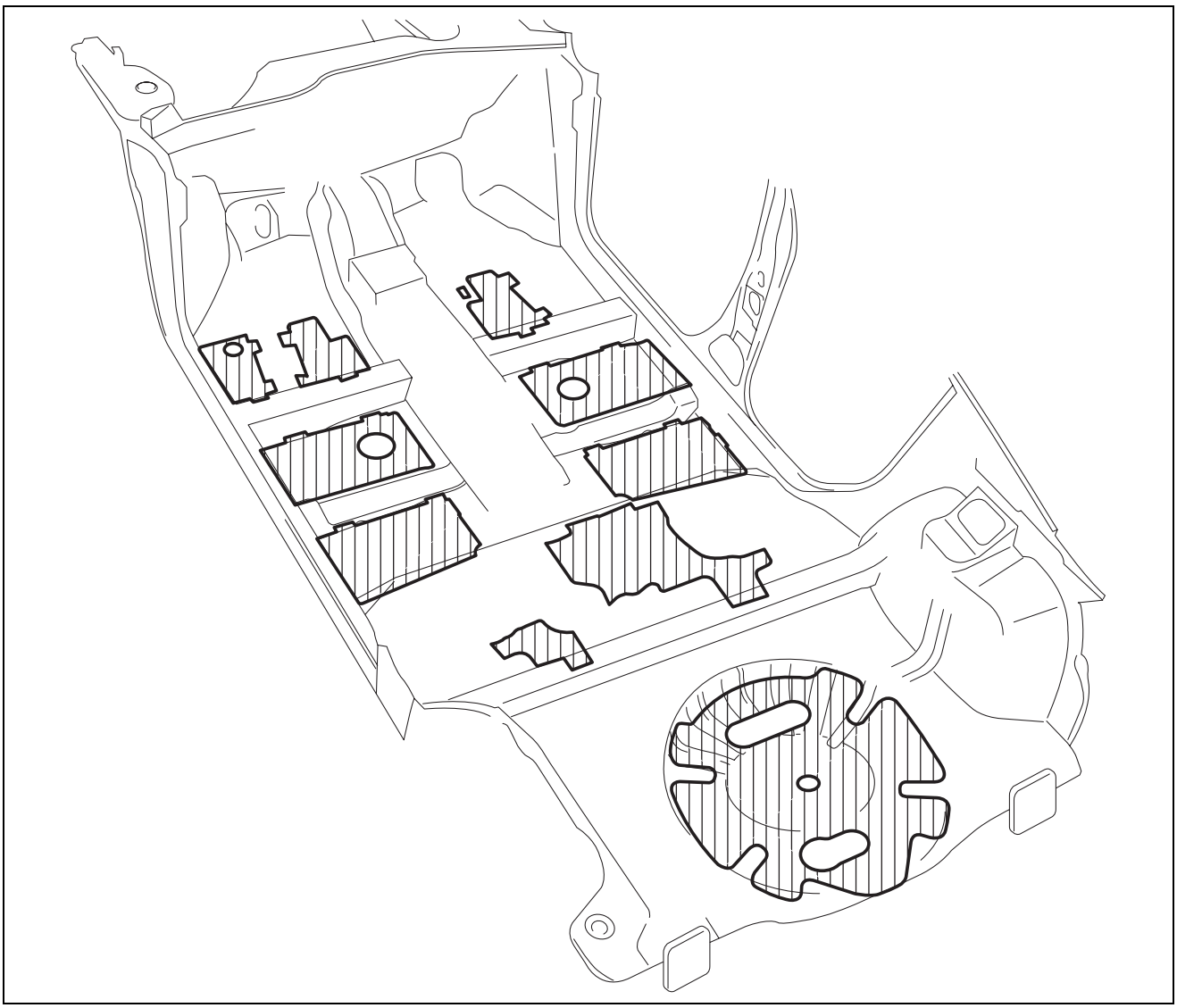

ac5wzb00000193

09-80D BODY STRUCTURE [DIMENSIONS]

UNDERBODY DIMENSIONS [DIMENSIONS] 09-80D–2
FRONT WHEEL ALIGNMENT [DIMENSIONS] 09-80D–3
Steering Angle Adjustment 09-80D–4
Total Toe-in Adjustment 09-80D–4
REAR WHEEL ALIGNMENT [DIMENSIONS] 09-80D–5
Total Toe-in Adjustment 09-80D–5
FRONT BODY STRAIGHT-LINE DIMENSIONS (1) [DIMENSIONS]. 09-80D–6
FRONT BODY STRAIGHT-LINE DIMENSIONS (2) [DIMENSIONS] 09-80D–7
CABIN SIDE FRAME STRAIGHT-LINE DIMENSIONS [DIMENSIONS] 09-80D–8
ROOM STRAIGHT-LINE DIMENSIONS (1) [DIMENSIONS] 09-80D–9
ROOM STRAIGHT-LINE DIMENSIONS (2) [DIMENSIONS] 09-80D–11
ROOM STRAIGHT-LINE DIMENSIONS (3) [DIMENSIONS] 09-80D–12
REAR BODY STRAIGHT-LINE DIMENSIONS (1) [DIMENSIONS] 09-80D–13

BODY STRUCTURE [DIMENSIONS]

UNDERBODY DIMENSIONS [DIMENSIONS]

id098010990000

Note

- The following figure is a bottom view.

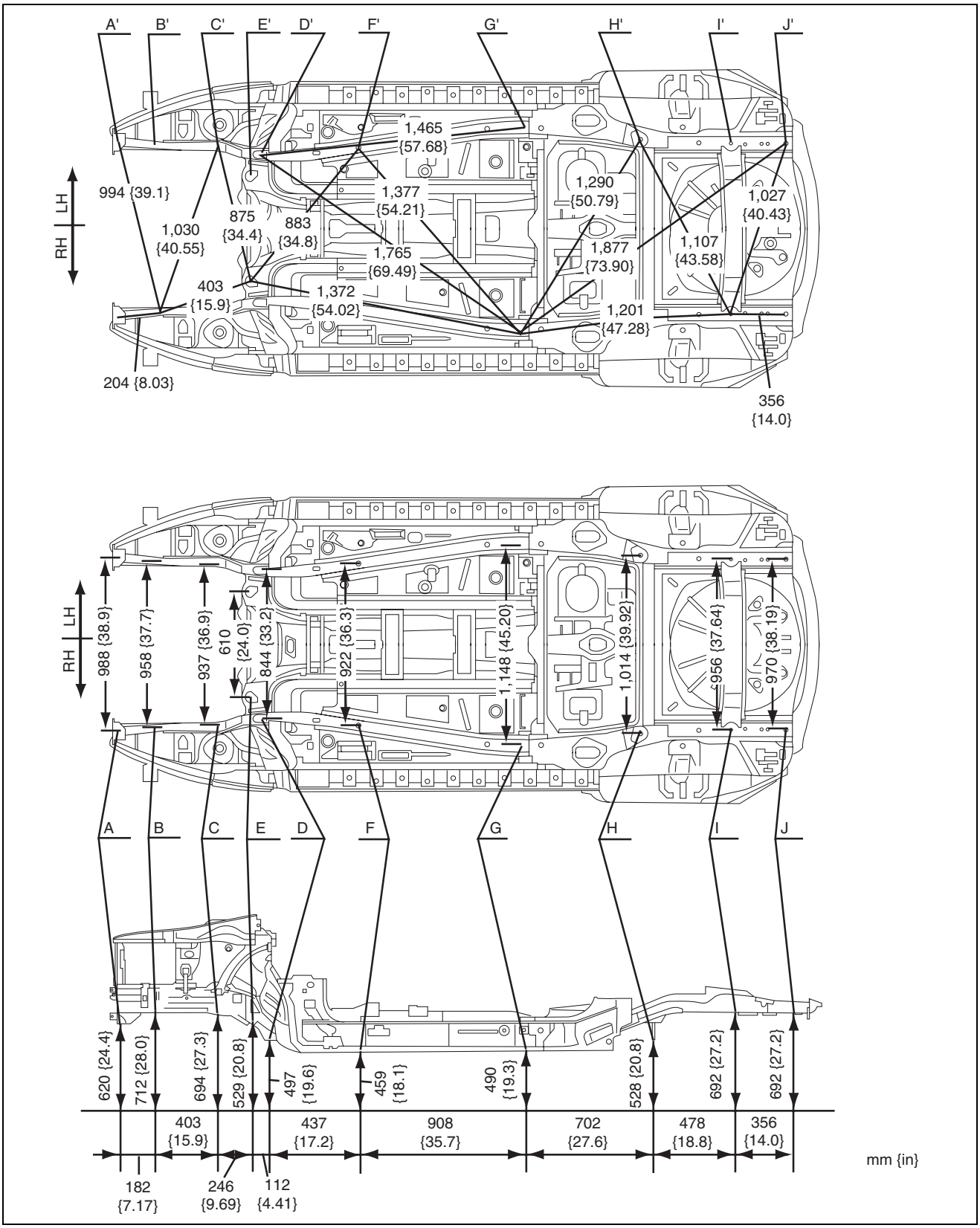

ac5wzb00000298

BODY STRUCTURE [DIMENSIONS]

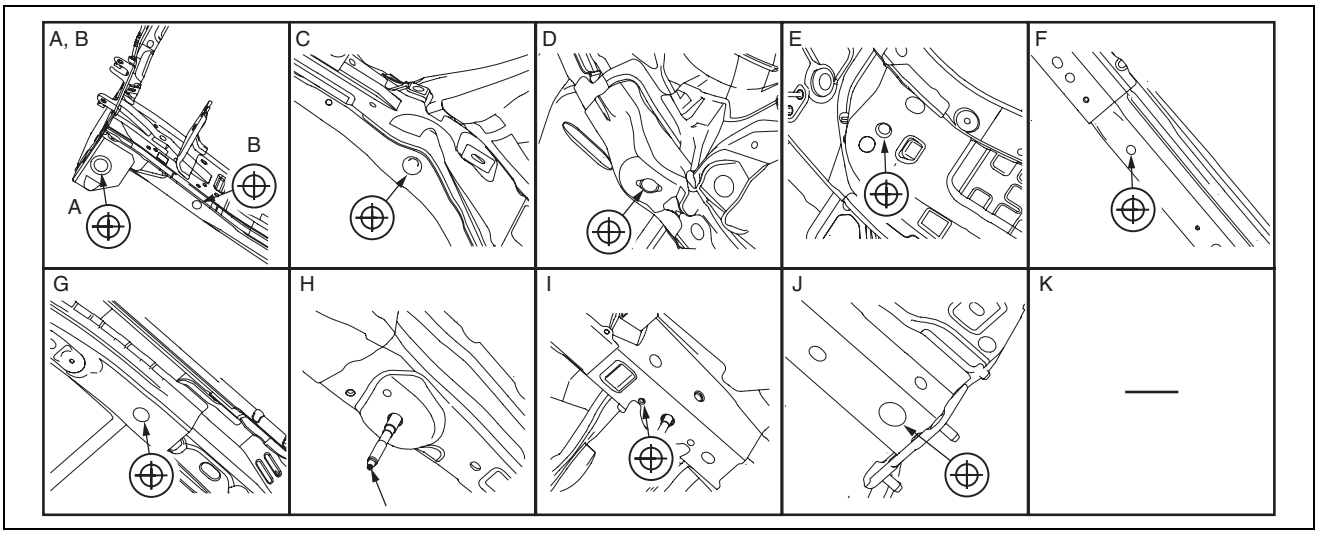

ac5wzb00000163

Point symbol	Designation	Hole diameter or bolt or nut size mm {in}
A	Front crossmember installation hole	ϕ24 {0.94}
B	Front side frame datum hole	ϕ16 {0.63}
C	Front crossmember installation hole	ϕ22.5 {0.886}
D	Front crossmember installation hole	ϕ19 {0.75}
E	Front crossmember installation hole	ϕ22 {0.87}

Point symbol	Designation	Hole diameter or bolt or nut size mm {in}
F	Front B frame datum hole	ϕ16 {0.63}
G	Front B frame datum hole	ϕ25 {0.98}
H	Rear crossmember mounting bolt	M12
I	Rear side frame datum hole	ϕ10 {0.39}
J	Rear side frame datum hole	ϕ30 {1.2}

FRONT WHEEL ALIGNMENT [DIMENSIONS]

id098010898900

Front wheel alignment (Unloaded)*1 [SKYACTIV-G 2.0]

Item			Fuel gauge indication				
			Empty	1/4	1/2	3/4	Full
Maximum steering angle [Tolerance ±3°]		Inner	37°48′				
		Outer	30°54′				
Total toe-in	Tire [Tolerance ±4 {0.2}]	(mm {in})	2 {0.08}				
	Rim inner [Tolerance ±3 {0.1}]	(mm {in})	1.0 {0.04}				
		(degree)	0°10′±0°20′				
Caster angle*2 (Reference value) [Tolerance ±1°]			6°19′	6°21′	6°24′	6°27′	6°29′
Camber angle*2 (Reference value) [Tolerance ±1°]			-0°20′	-0°21′	-0°21′	-0°21′	-0°22′
Steering axis inclination (Reference value)			11°57′	11°58′	11°59′	11°59′	12°00′

***1 : Engine coolant and engine oil are at specified level. Spare tire, jack and tools are in designated position.**
***2 : Difference between left and right must not exceed 1°30′.**

BODY STRUCTURE [DIMENSIONS]

Front wheel alignment (Unloaded)*1 [SKYACTIV-D 2.2]

Item			Fuel gauge indication				
			Empty	1/4	1/2	3/4	Full
Maximum steering angle [Tolerance ±3°]		Inner	37°48′				
		Outer	30°54′				
Total toe-in	Tire [Tolerance ±4 {0.2}]	(mm {in})	2 {0.08}				
	Rim inner [Tolerance ±3 {0.1}]		1.0 {0.04}				
		(degree)	0°10′±0°20′				
Caster angle*2 (Reference value) [Tolerance ±1°]			6°15′	6°17′	6°20′	6°23′	6°25′
Camber angle*2 (Reference value) [Tolerance ±1°]			-0°20′	-0°21′	-0°21′	-0°21′	-0°22′
Steering axis inclination (Reference value)			11°57′	11°58′	11°59′	11°59′	12°00′

***1 : Engine coolant and engine oil are at specified level. Spare tire, jack and tools are in designated position.**
***2 : Difference between left and right must not exceed 1°30′.**

Steering Angle Adjustment

1. Loosen the tie-rod end locknuts.
2. Remove the steering gear boot clamp.
3. Turn the tie rods.

   Standard length L
   10.1—23.1 mm {0.4—0.9 in}

4. Turn the tie rods equally to provide the correct maximum steering angle.
5. Tighten the tie-rod end locknuts.

   Tightening torque
   69—98 N·m {7.1—9.9 kgf·m, 51—72 ft·lbf}

6. Verify that the boot is not twisted, and install the boot clamp.
7. Adjust the toe-in after adjusting the steering angle.

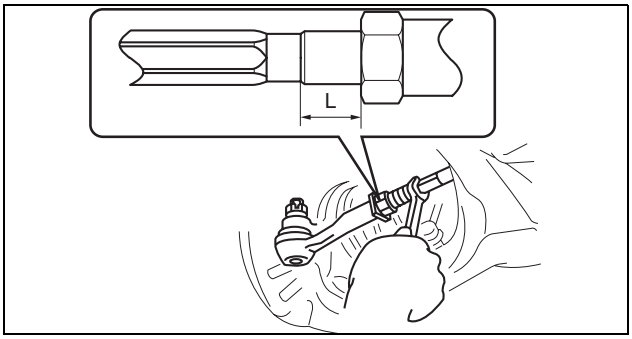

ac5wzw0000242

Total Toe-in Adjustment

1. Loosen the locknut of the tie-rod end.
2. Remove the rack boot clamp.
3. Adjust the total toe-in by rotating each tie rod (left and right) in the opposite directions by the same amount respectively.

   Note
   - Toe angle changes by **approx. 4 mm {0.2 in}** per one rotation of the tie rod for one wheel.
   - Each tie rod has a right-hand thread. When increasing the toe-in angle, rotate the right tie rod toward the front of the vehicle and rotate the left tie rod toward the rear of the vehicle by the same amount.

4. Tighten the locknut of the tie-rod end.

   Tightening torque
   69—98 N·m {7.1—9.9 kgf·m, 51—72 ft·lbf}

5. Verify that the rack boot does not have any twisting and install the rack boot clamp.

BODY STRUCTURE [DIMENSIONS]

REAR WHEEL ALIGNMENT [DIMENSIONS]

id098010899000

Rear wheel alignment (Unloaded)*1

Item			Fuel gauge indication				
			Empty	1/4	1/2	3/4	Full
Total toe-in	Tire [Tolerance ±4 {0.2}]	(mm {in})	2 {0.08}				
	Rim inner [Tolerance ±3 {0.1}]		1.0 {0.04}				
		(degree)	0°10′±0°20′				
Camber angle*2 (Reference value) [Tolerance ±1°]			-0°51′	-0°54′	-0°56′	-0°58′	-1°01′
Thrust angle (Reference value) [Tolerance ±0°48′]			0°00′				

***1 : Engine coolant and engine oil are at specified level. Spare tire, jack and tools are in designated position.**
***2 : Difference between left and right must not exceed 1°30′.**

Total Toe-in Adjustment

1. Loosen the installation nut of the adjusting cam bolt.
2. Rotate the adjusting cam bolt in either direction to adjust the toe-in.

	Left wheel	Right wheel
Toe-out direction	Clockwise	Counterclockwise
Toe-in direction	Counterclockwise	Clockwise

3. Tighten the nut.

   Tightening torque
   84—101 N·m {8.6—10 kgf·m, 62—74 ft·lbf}

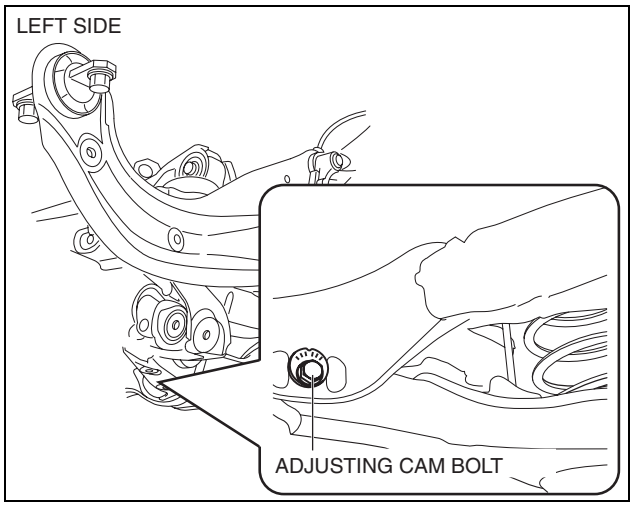

ac5wzw0000245

BODY STRUCTURE [DIMENSIONS]

FRONT BODY STRAIGHT-LINE DIMENSIONS (1) [DIMENSIONS]

id098010740600

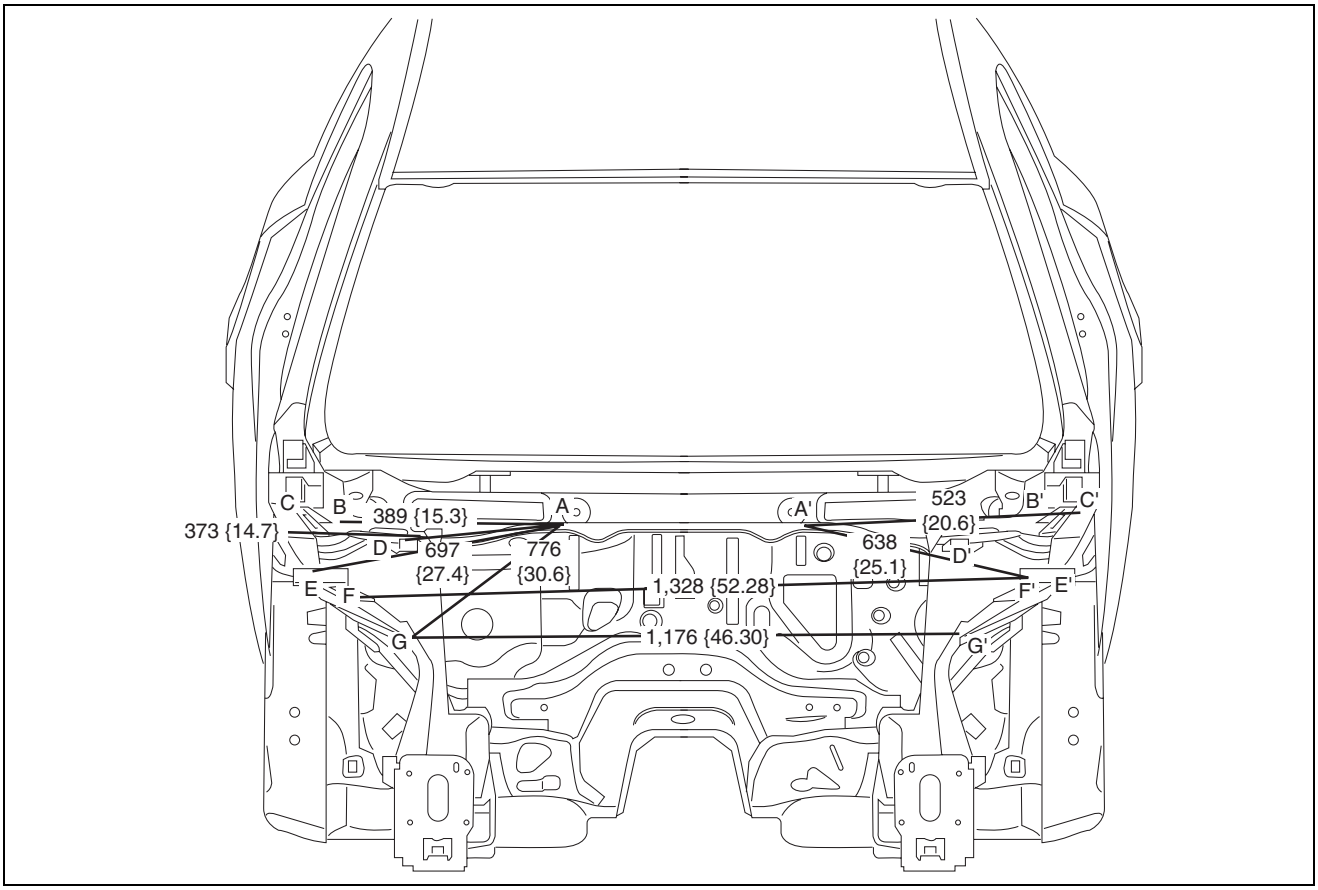

ac5wzb00000297

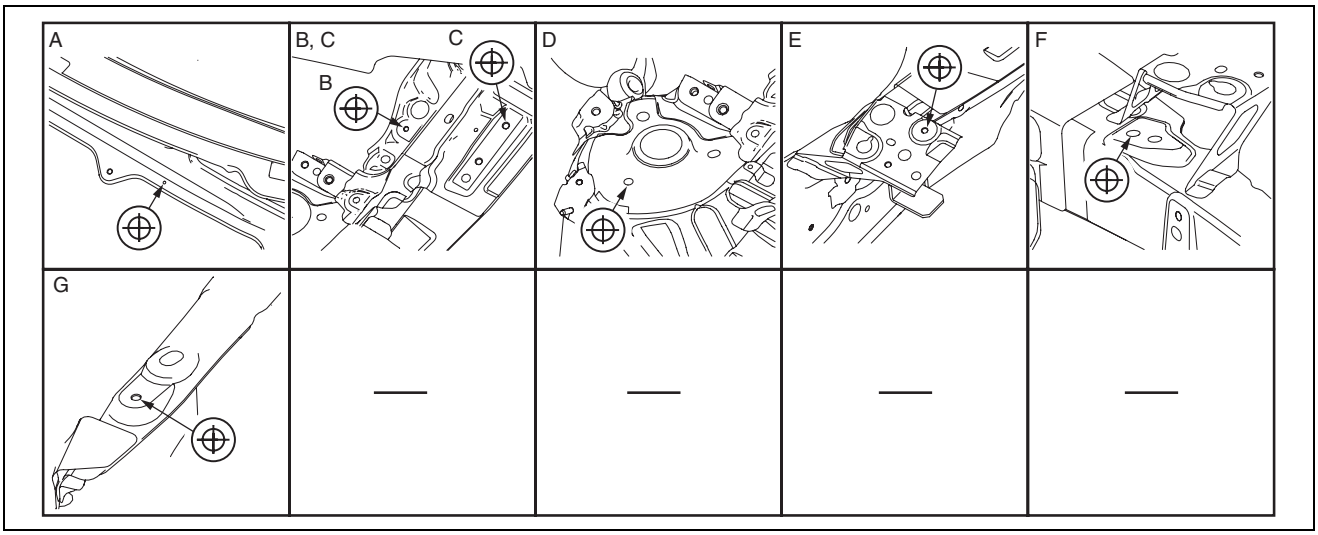

ac5wzb00000161

Point symbol	Designation	Hole diameter or bolt or nut size mm {in}
A	Cowl panel installation hole	ϕ5 {0.2}
B	Wiper bracket datum hole	ϕ7 {0.3}
C	Bonnet hinge installation hole	ϕ10 {0.39}
D	Front suspension upper mounting installation hole	ϕ10.2 {0.402}

Point symbol	Designation	Hole diameter or bolt or nut size mm {in}
E	Front fender panel installation hole	ϕ7 {0.3}
F	Apron reinforcement lower datum hole	ϕ10 {0.39}
G	Shroud upper member installation hole	ϕ7 {0.3}

BODY STRUCTURE [DIMENSIONS]

FRONT BODY STRAIGHT-LINE DIMENSIONS (2) [DIMENSIONS]

id098010740700

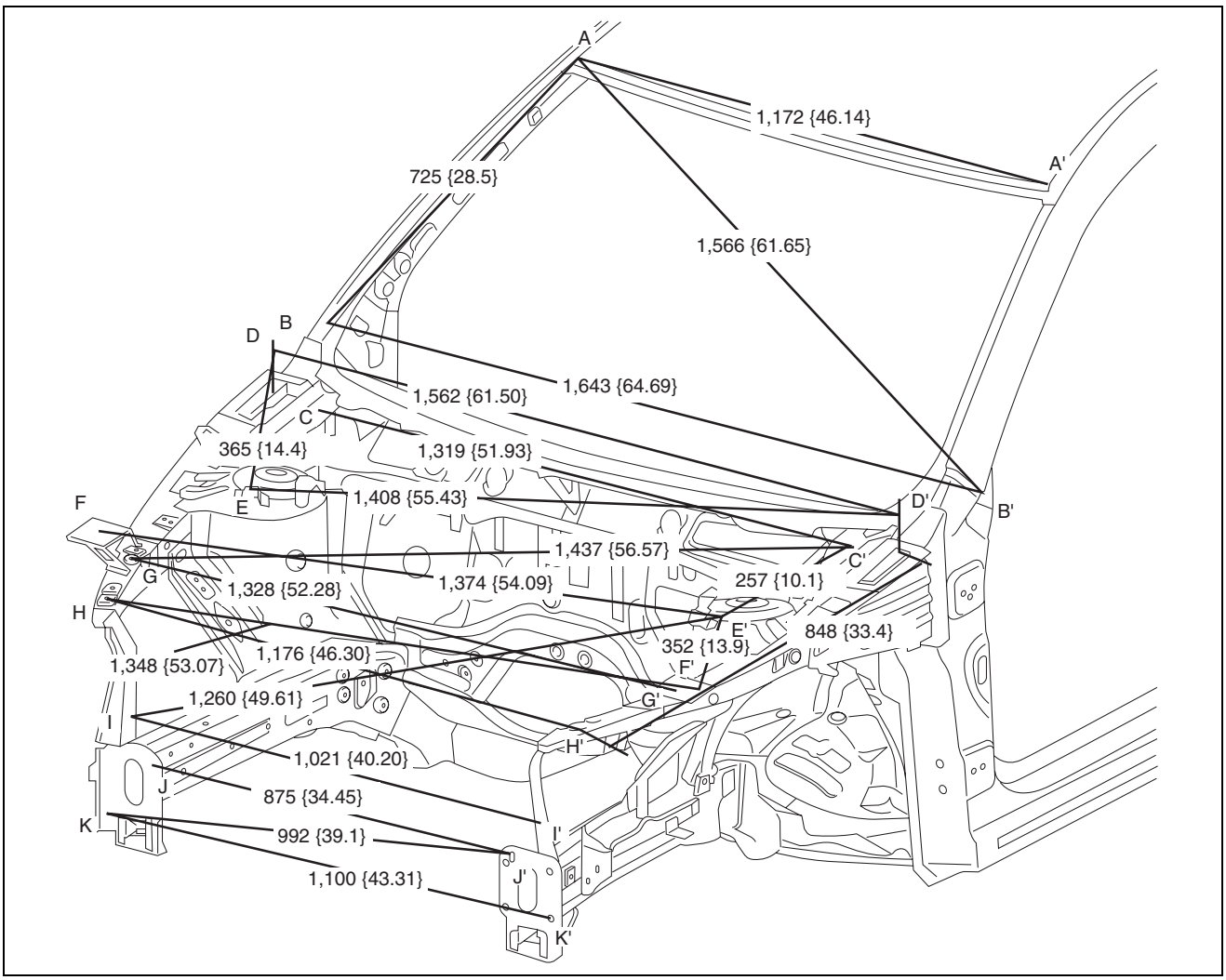

ac5wzb00000179

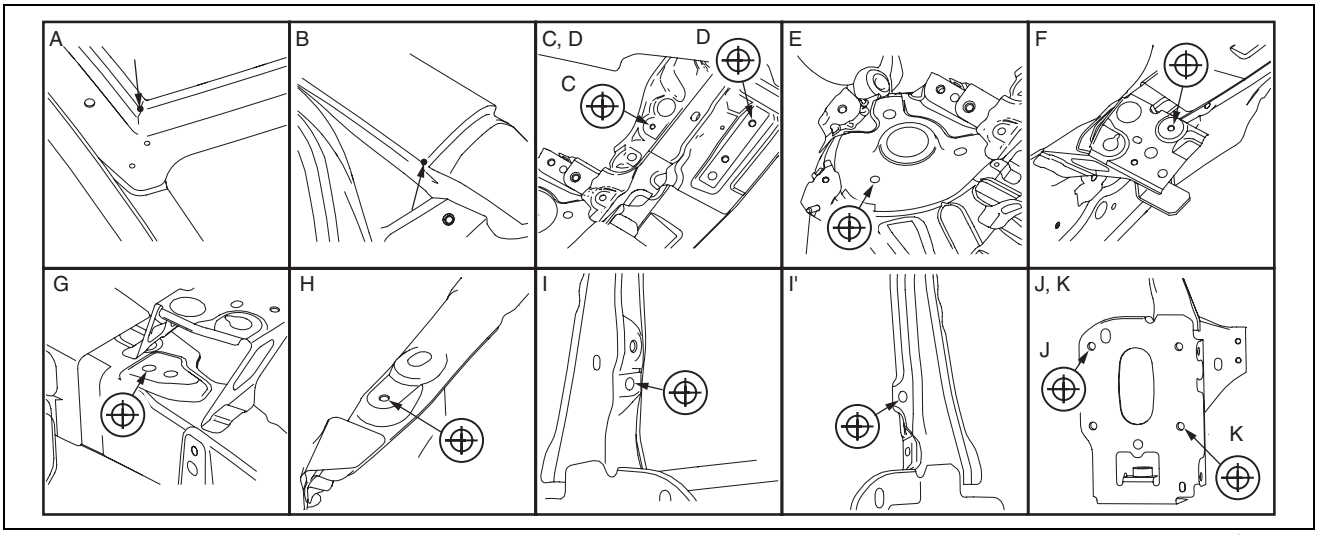

ac5wzb00000167

Point symbol	Designation	Hole diameter or bolt or nut size mm {in}
A	Roof seamless location	-

BODY STRUCTURE [DIMENSIONS]

Point symbol	Designation	Hole diameter or bolt or nut size mm {in}
B	Cabin side outer frame (front pillar outer) projection location	-
C	Wiper bracket datum hole	ϕ7 {0.3}
D	Bonnet hinge installation hole	ϕ10 {0.39}
E	Front suspension upper mounting installation hole	ϕ10.2 {0.402}
F	Front fender panel installation hole	ϕ7 {0.3}
G	Apron reinforcement lower datum hole	ϕ10 {0.39}
H	Front fender panel installation hole	ϕ7 {0.3}
I	Side stay datum hole	ϕ10 {0.39}
J	Front bumper reinforcement installation hole	ϕ12 {0.47}
K	Front bumper reinforcement installation hole	ϕ12 {0.47}

CABIN SIDE FRAME STRAIGHT-LINE DIMENSIONS [DIMENSIONS]

id098010743600

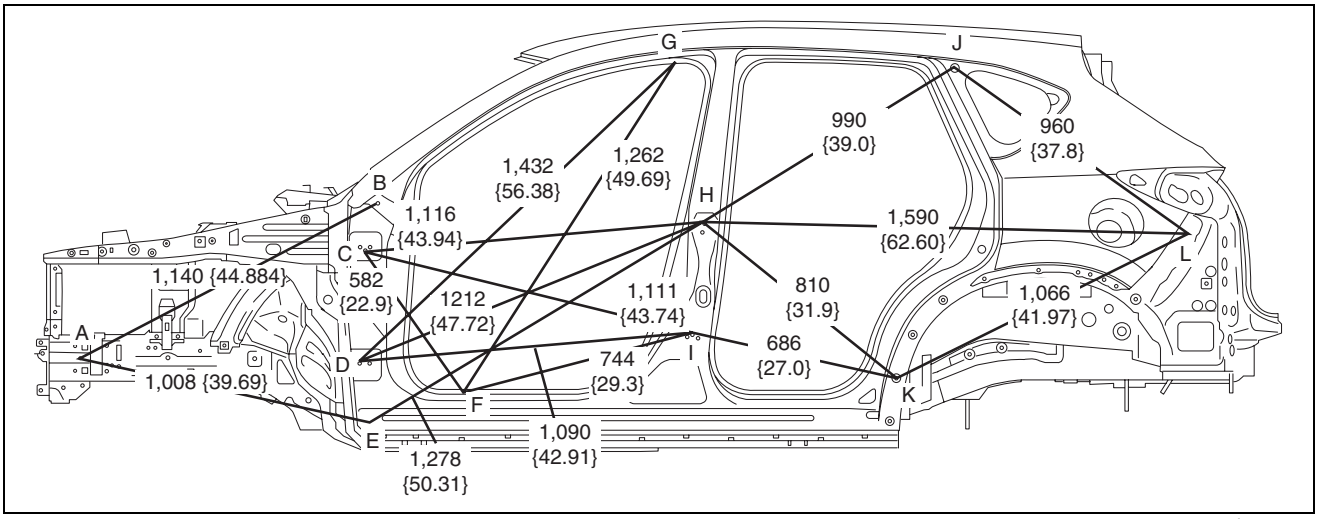

ac5wzb00000301

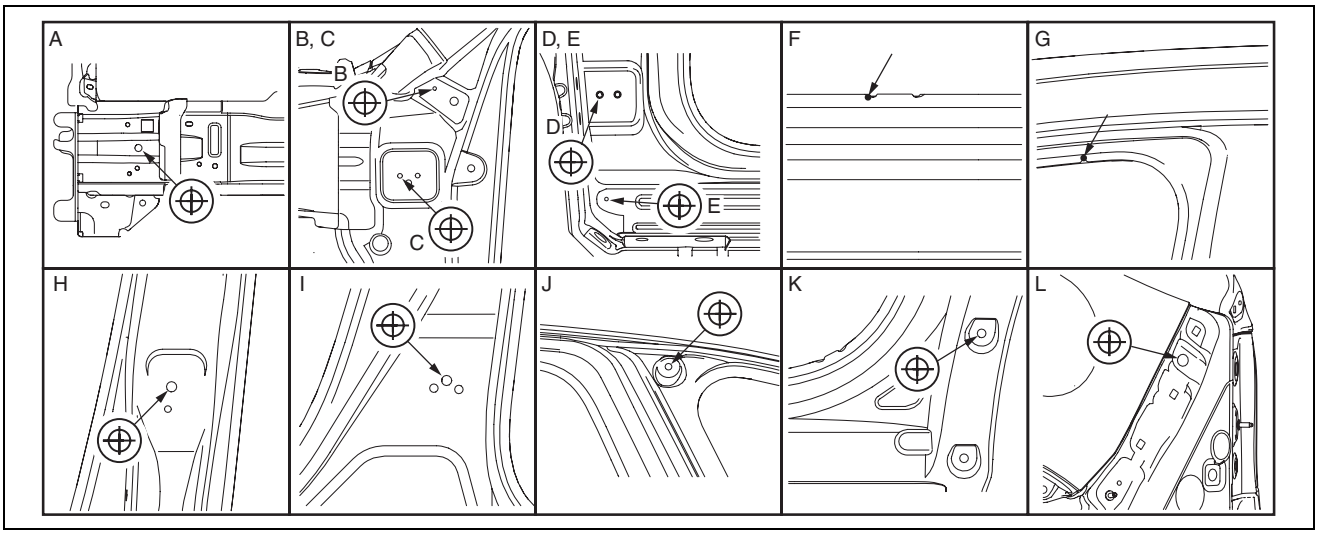

ac5wzb00000169

BODY STRUCTURE [DIMENSIONS]

Point symbol	Designation	Hole diameter or bolt or nut size mm {in}
A	Front side frame outer datum hole	ϕ12 {0.47}
B	Front fender panel installation hole	ϕ10 {0.39}
C	Front door hinge installation hole	ϕ12 {0.47}
D	Front door hinge installation hole	ϕ12 {0.47}
E	Front fender panel installation hole	ϕ11 {0.43}
F	Cabin side frame (outer) notch	-

Point symbol	Designation	Hole diameter or bolt or nut size mm {in}
G	Cabin side frame (outer) notch	-
H	Rear door hinge installation hole	ϕ12 {0.47}
I	Rear door hinge installation hole	ϕ12 {0.47}
J	Quarter window glass installation hole	ϕ8 {0.3}
K	Rear over fender installation hole	ϕ10 {0.39}
L	Rear bumper slider installation hole	ϕ16 {0.63}

ROOM STRAIGHT-LINE DIMENSIONS (1) [DIMENSIONS]

id098010743300

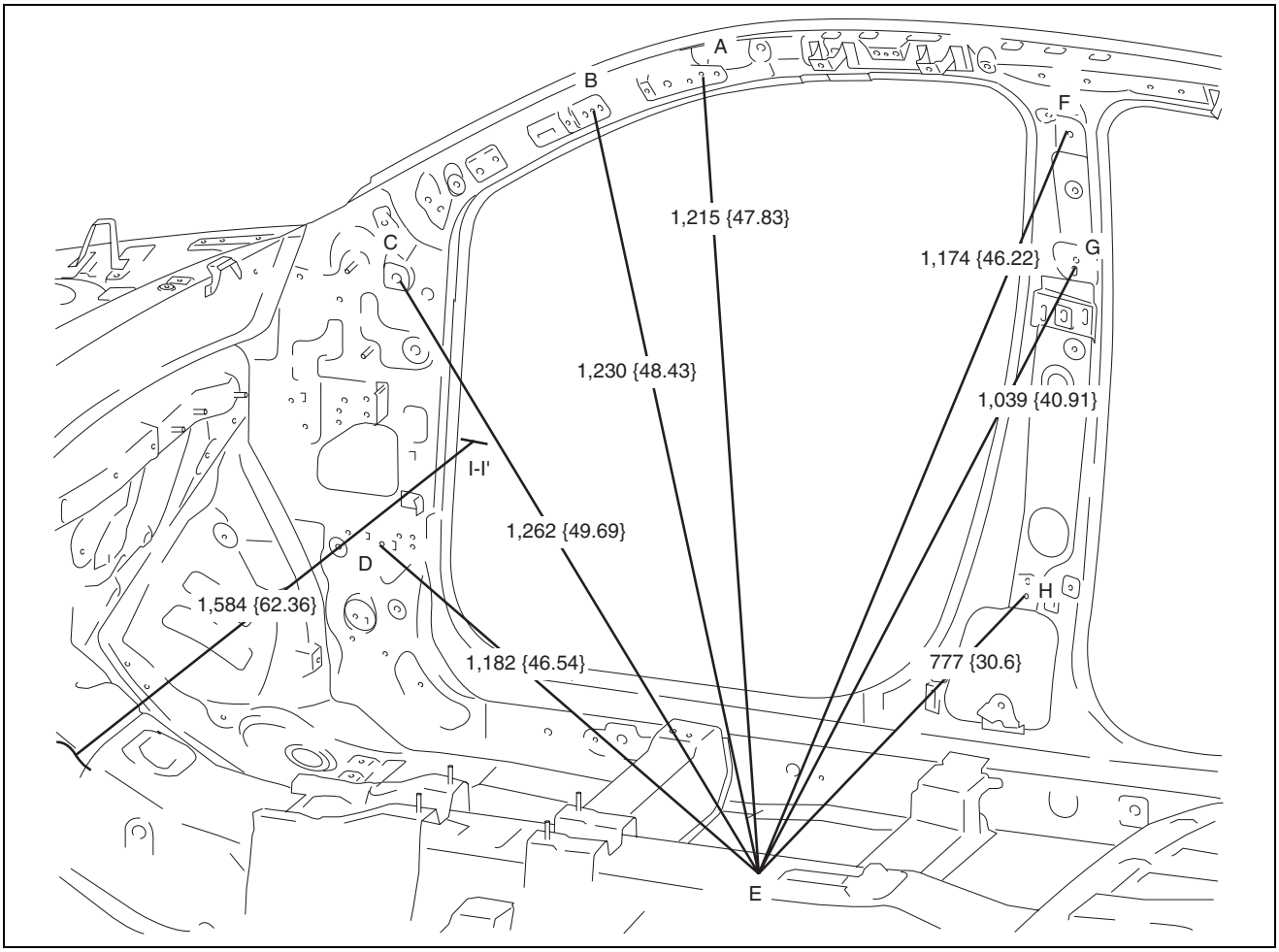

ac5wzb00000299

BODY STRUCTURE [DIMENSIONS]

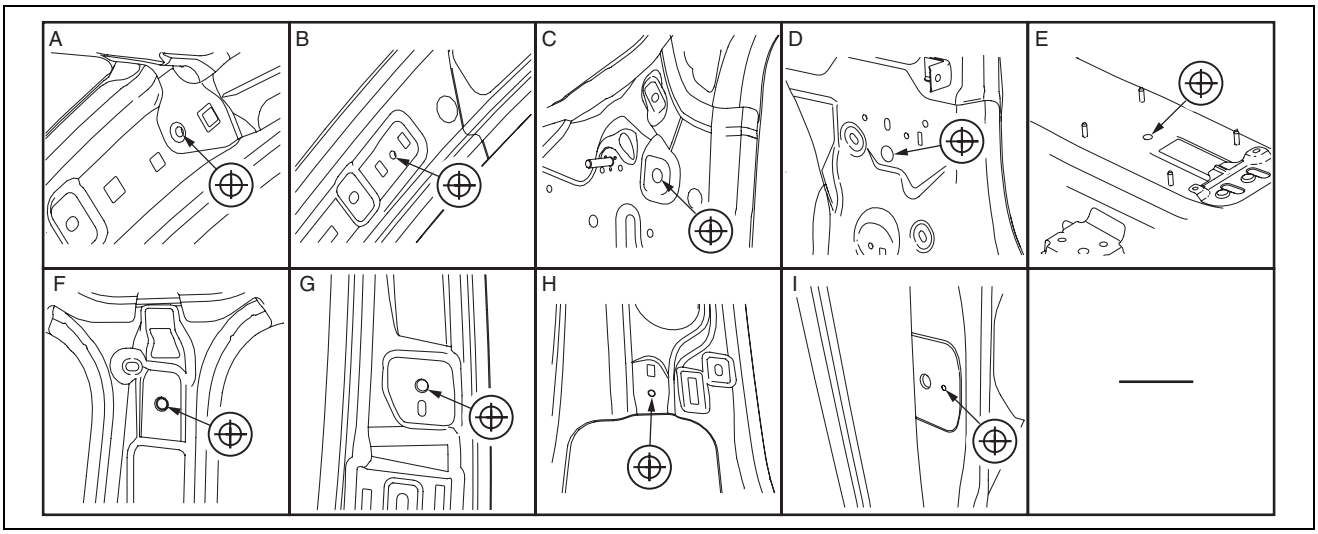

ac5wzb00000172

Point symbol	Designation	Hole diameter or bolt or nut size mm {in}
A	Front pillar inner datum hole	ϕ7 {0.3}
B	Front pillar inner datum hole	ϕ7 {0.3}
C	Dashboard installation hole	ϕ14 {0.55}
D	Side sill inner front datum hole	ϕ16 {0.63}
E	Parking brake lever installation hole	ϕ12 {0.47}

Point symbol	Designation	Hole diameter or bolt or nut size mm {in}
F	Front seat belt upper anchor installation hole	ϕ14 {0.55}
G	Front seat belt upper anchor installation hole	ϕ14 {0.55}
H	Center pillar inner datum hole	ϕ7 {0.3}
I	Front door checker installation hole	ϕ4 {0.2}

BODY STRUCTURE [DIMENSIONS]

ROOM STRAIGHT-LINE DIMENSIONS (2) [DIMENSIONS]

id098010743400

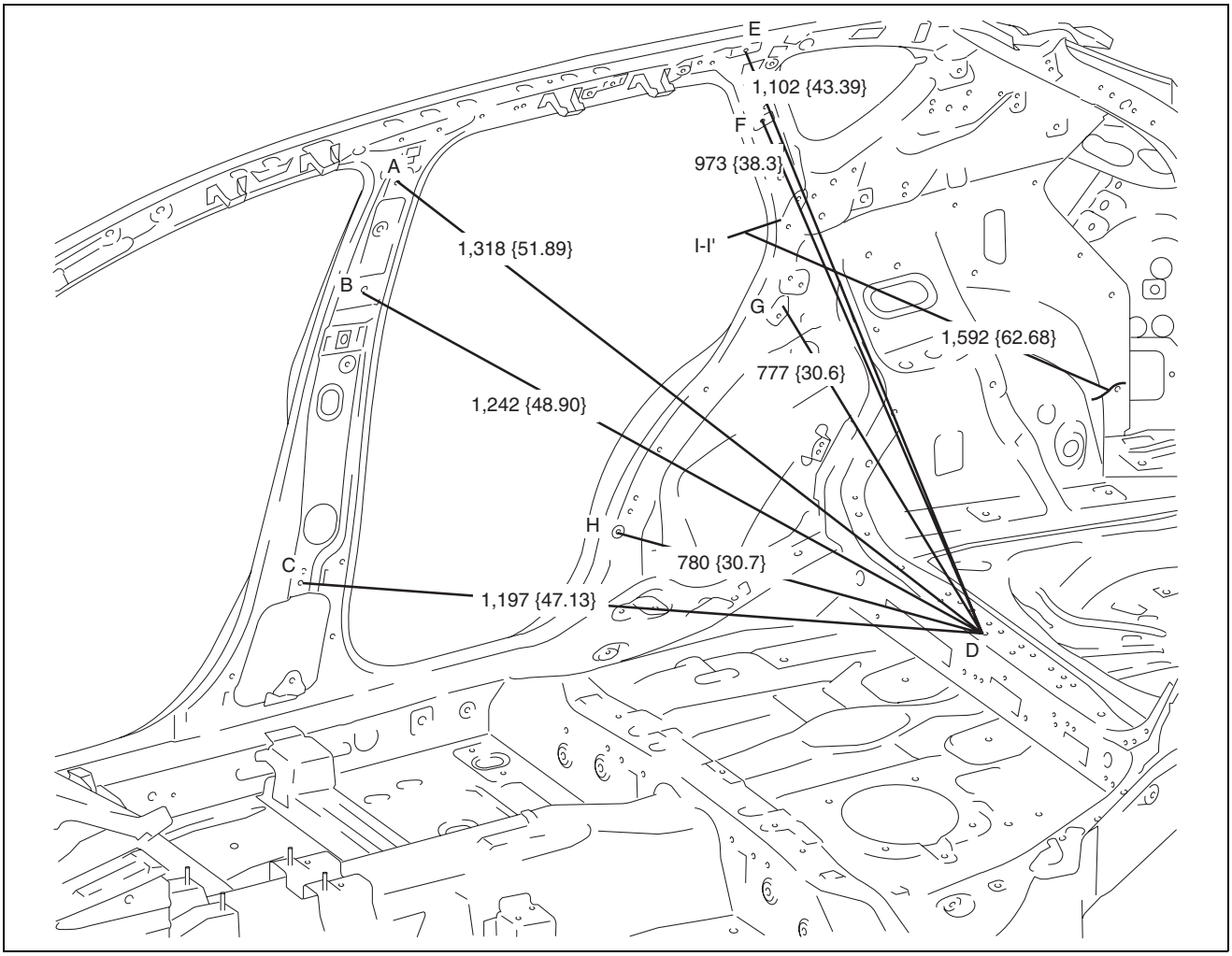

ac5wzb00000300

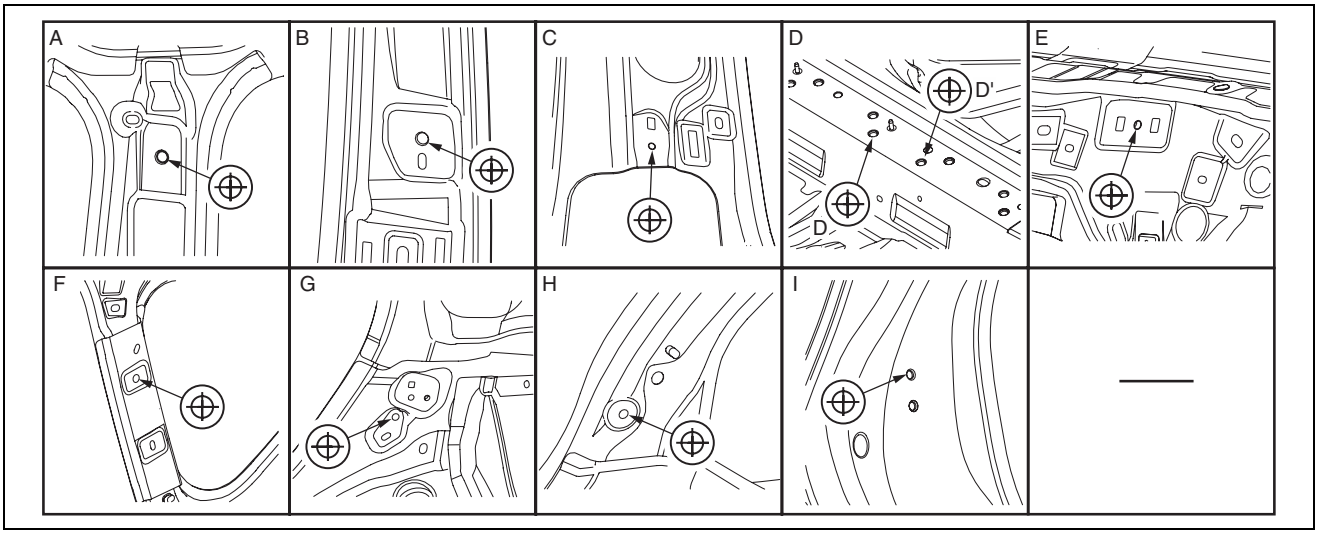

ac5wzb00000173

Point symbol	Designation	Hole diameter or bolt or nut size mm {in}
A	Front seat belt upper anchor installation	ϕ14 {0.55}

Point symbol	Designation	Hole diameter or bolt or nut size mm {in}
B	Front seat belt upper anchor installation	ϕ14 {0.55}
C	Center pillar inner datum hole	ϕ7 {0.3}

BODY STRUCTURE [DIMENSIONS]

Point symbol	Designation	Hole diameter or bolt or nut size mm {in}
D	Rear seat installation hole	ϕ14 {0.55}
E	Rear pillar inner datum hole	ϕ7 {0.3}
F	C-pillar trim installation hole	ϕ10 {0.39}
G	Trunk side trim installation hole	ϕ8.6 {0.34}
H	Rear pillar inner datum hole	ϕ8.6 {0.34}
I	Rear door striker installation hole	ϕ13 {0.51}

ROOM STRAIGHT-LINE DIMENSIONS (3) [DIMENSIONS]

id098010746200

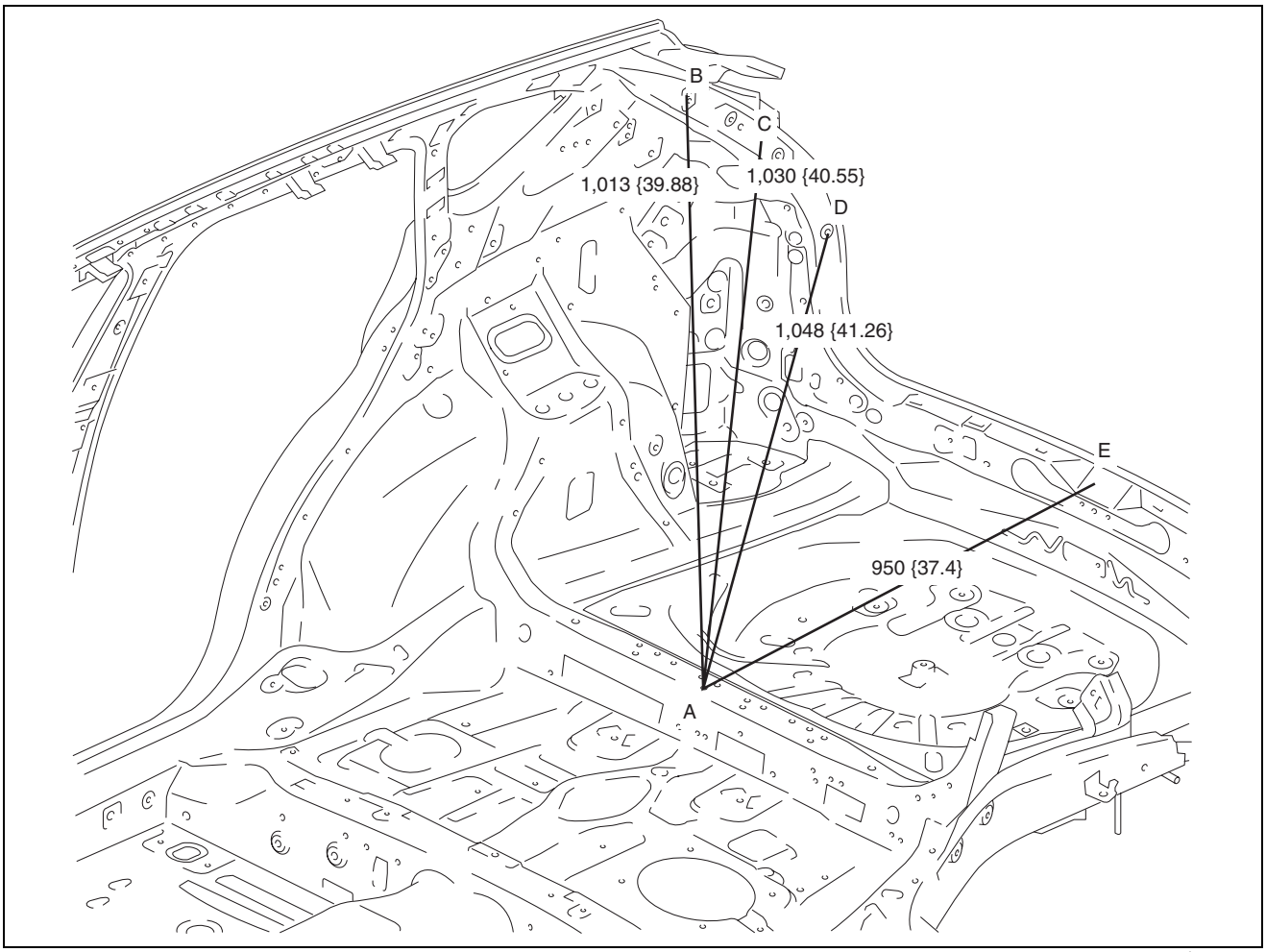

ac5wzb00000302

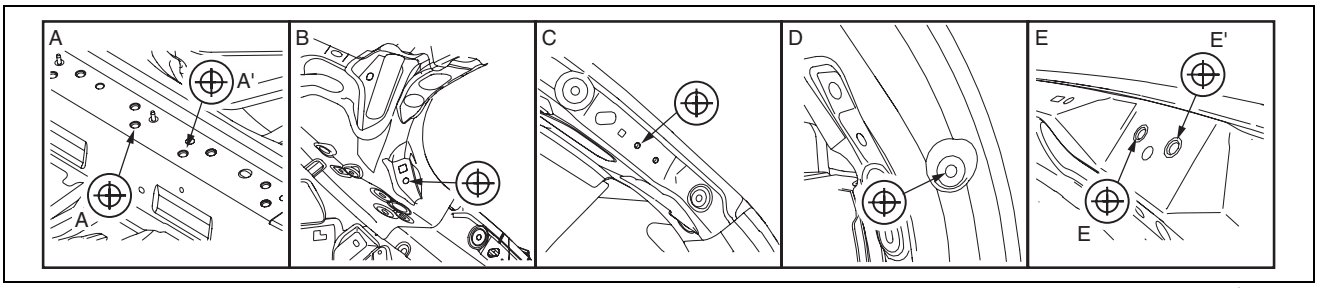

ac5wzb00000176

Point symbol	Designation	Hole diameter or bolt or nut size mm {in}
A	Rear seat installation hole	ϕ14 {0.55}

Point symbol	Designation	Hole diameter or bolt or nut size mm {in}
B	D-pillar trim installation hole	ϕ8.6 {0.34}

BODY STRUCTURE [DIMENSIONS]

Point symbol	Designation	Hole diameter or bolt or nut size mm {in}
C	Liftgate stay damper installation hole	ϕ7 {0.3}
D	Trunk side trim installation hole	ϕ8.6 {0.34}
E	Liftgate striker installation hole	ϕ14 {0.55}

REAR BODY STRAIGHT-LINE DIMENSIONS (1) [DIMENSIONS]

id098010746300

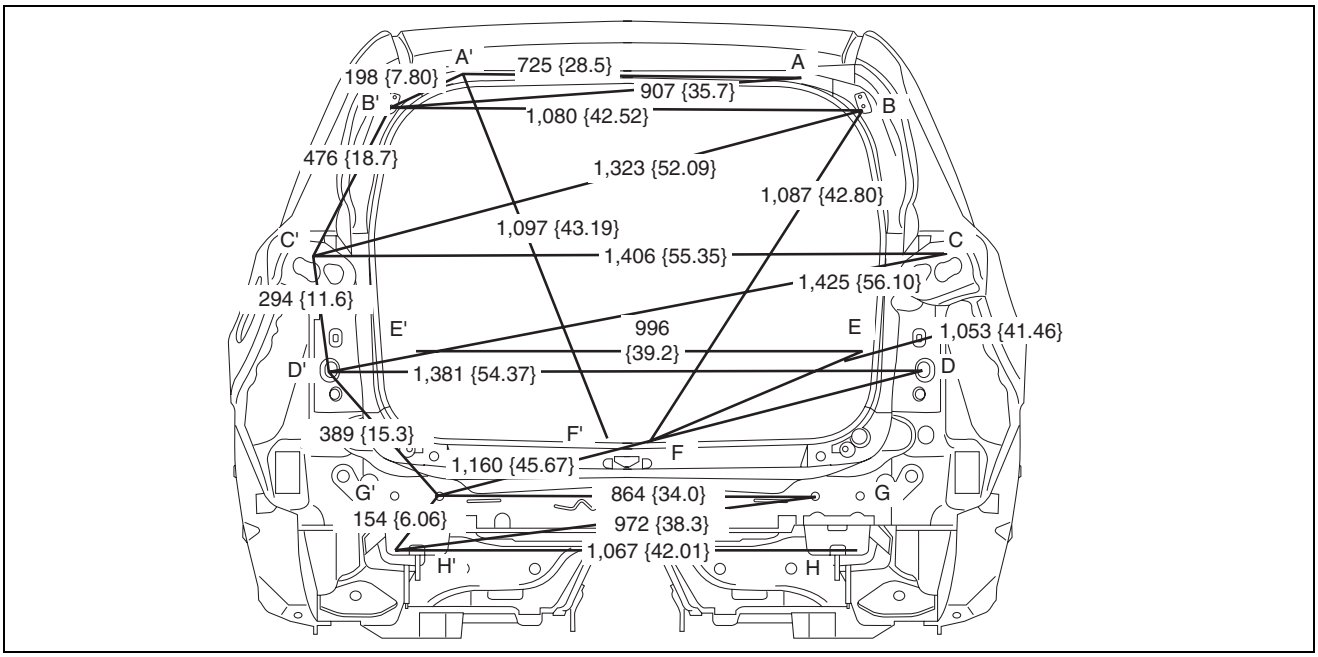

ac5wzb00000303

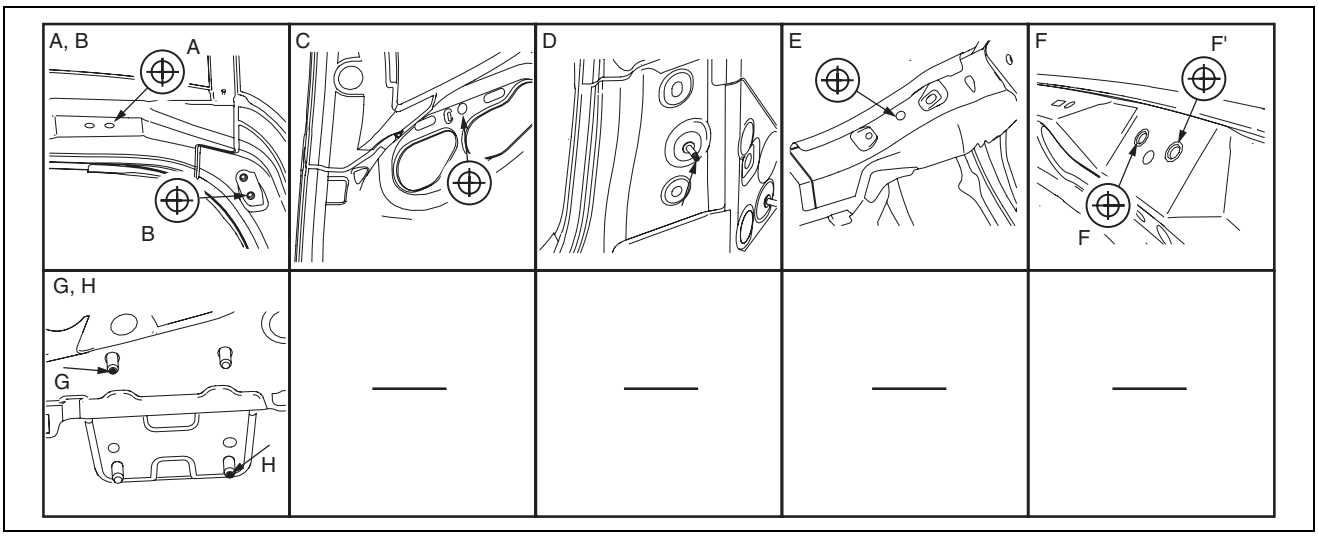

ac5wzb00000304

Point symbol	Designation	Hole diameter or bolt or nut size mm {in}
A	Liftgate hinge installation hole	ϕ12 {0.47}
B	Liftgate stay damper installation hole	ϕ10 {0.39}
C	Rear combination light installation slot	ϕ10 {0.39}
D	Rear bumper installation bolt	M6

Point symbol	Designation	Hole diameter or bolt or nut size mm {in}
E	Brace bracket datum hole	ϕ10 {0.39}
F	Liftgate striker installation hole	ϕ14 {0.55}
G	Rear bumper reinforcement installation bolt	M10
H	Rear bumper reinforcement installation bolt	M10

09-80E BODY STRUCTURE [PLASTIC BODY PARTS]

PLASTIC PARTS HEAT RESISTING TEMPERATURE [PLASTIC BODY PARTS] 09-80E–1
REPAIRABLE RANGE OF POLYPROPYLENE BUMPERS [PLASTIC BODY PARTS] 09-80E–1
Repairable Bumpers 09-80E–2
POLYPROPYLENE BUMPER REPAIR [PLASTIC BODY PARTS]. 09-80E–3
PROCEDURE [PLASTIC BODY PARTS]. 09-80E–4

BODY STRUCTURE [PLASTIC BODY PARTS]

PLASTIC PARTS HEAT RESISTING TEMPERATURE [PLASTIC BODY PARTS]

id098011740200

Part Name		Code	Material Name	Heat resisting Temperature°C{°F}
Windshield molding		PVC	POLYVINYLCHLORIDE	95 {203}
Cowl grille		PP	POLYPROPYLENE	95 {203}
Front combination light	Lens	PC	POLYCARBONATE	130 {266}
	Housing	PP	POLYPROPYLENE	90 {194}
Front bumper		PP	POLYPROPYLENE	100 {212}
Front side turn light	Lens	PMMA	ACRYLIC	75 {167}
	Housing	PC-PBT	POLYCARBONATE-PBT	80 {176}
Out side mirror	Panel	ABS	ABS	90 {194}
	Visor	AAS	AAS	100 {212}
	Outer cover	AAS	AAS	100 {212}
Front door garnish		AAS	AAS	100 {212}
Rear door garnish		AAS	AAS	100 {212}
Side garnish	Front	PP	POLYPROPYLENE	90 {194}
	Rear	PP	POLYPROPYLENE	90 {194}
Rear over fender		PP	POLYPROPYLENE	90 {194}
Roof molding		AC	ACS	90 {194}
Rear bumper		PP	POLYPROPYLENE	100 {212}
Rear combination light	Lens	PMMA	ACRYLIC	80 {176}
	Housing	AAS	AAS	70 {158}
High-mount brake light	Lens	PMMA	ACRYLIC	80 {176}
	Housing	ABS	ABS	100 {212}
Rear Spoiler		PP	POLYPROPYLENE	90 {194}
Shroud panel		PP	POLYPROPYLENE	100 {212}

Note

- The application of temperatures higher than heat resisting temperatures may result in part deformation.

REPAIRABLE RANGE OF POLYPROPYLENE BUMPERS [PLASTIC BODY PARTS]

id098011600100

The three types of damaged bumpers shown below are considered repairable. Although a bumper which has been damaged greater than this could also be repaired, it should be replaced with a new one because such repair would detract from the looks and quality of the bumper. In addition, such repair is not considered reasonable in terms of work time.

BODY STRUCTURE [PLASTIC BODY PARTS]

Repairable Bumpers

1. A bumper with a hole less than 50 mm {1.97 in} in diameter.

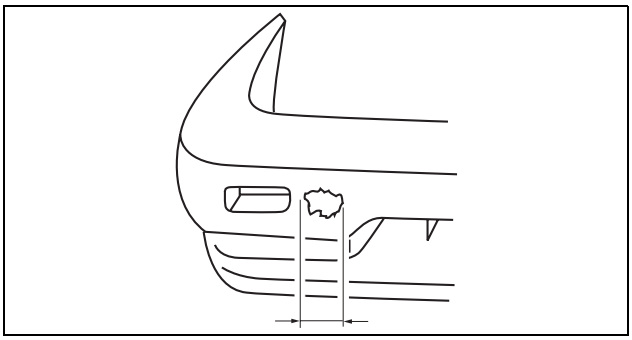

am8rrb00000046

2. A bumper with a crack less than 100 mm {3.94 in} in length.

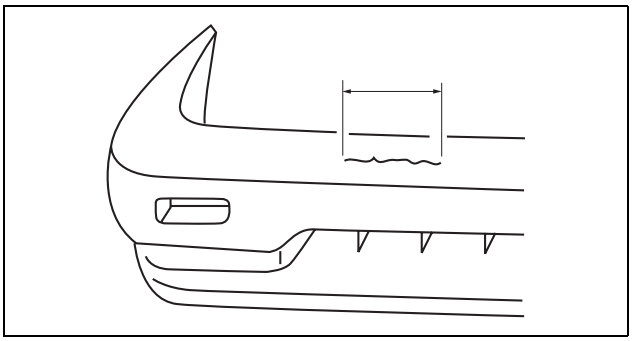

am8rrb00000047

3. A bumper with a crack less than 100 mm {3.94 in} in length that is less than half of the width of the bumper.

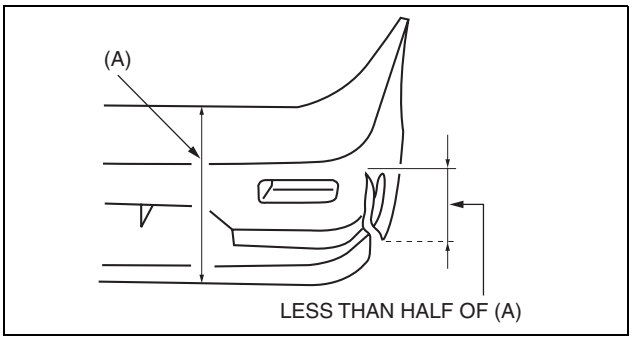

am8rrb00000048

BODY STRUCTURE [PLASTIC BODY PARTS]

POLYPROPYLENE BUMPER REPAIR [PLASTIC BODY PARTS]

id098011600200

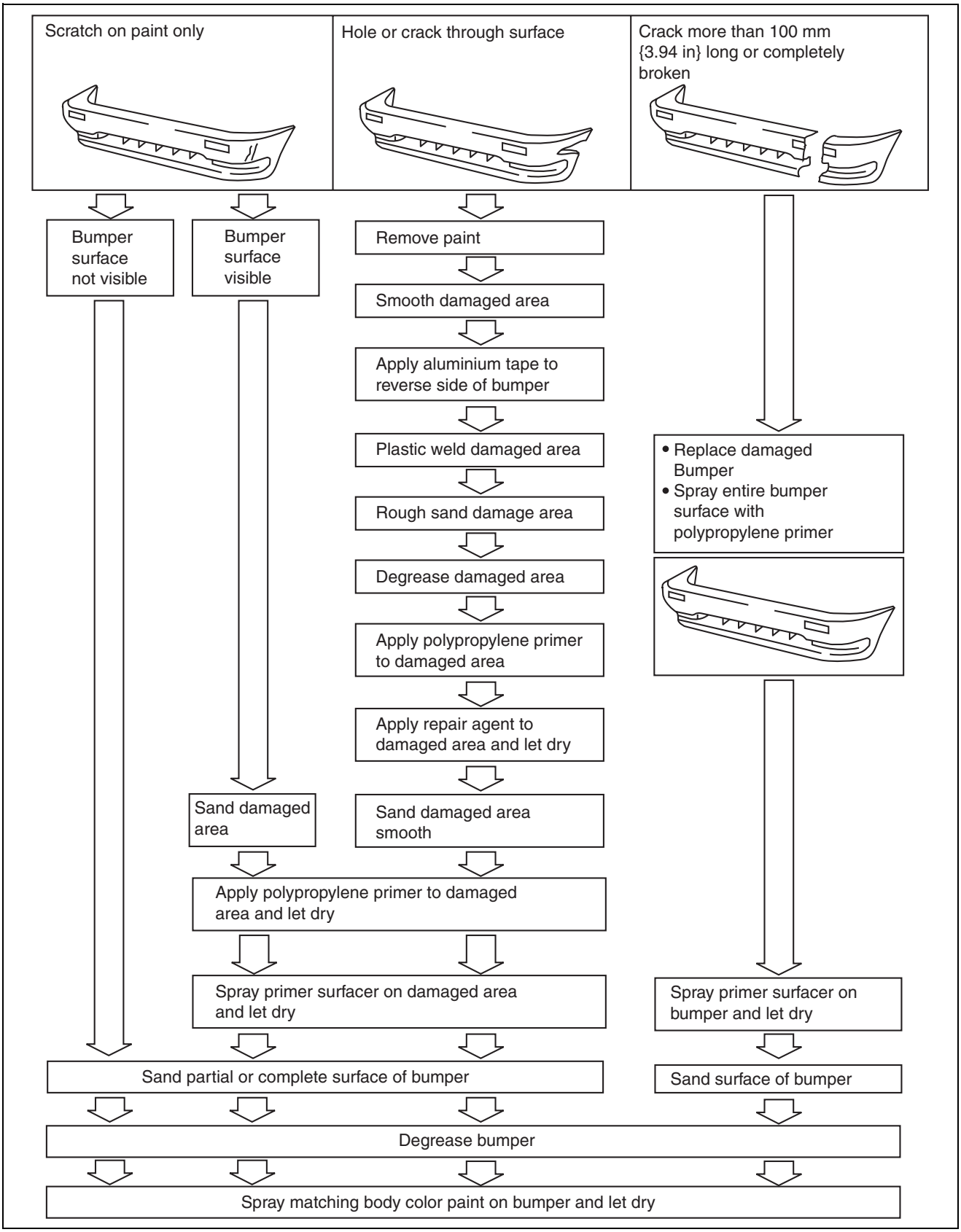

am2uub0000000

BODY STRUCTURE [PLASTIC BODY PARTS]

PROCEDURE [PLASTIC BODY PARTS]

id098011600300

Repair of polypropylene bumpers having damage that has reached the surface of the polypropylene and are too serious to be restored by painting only.

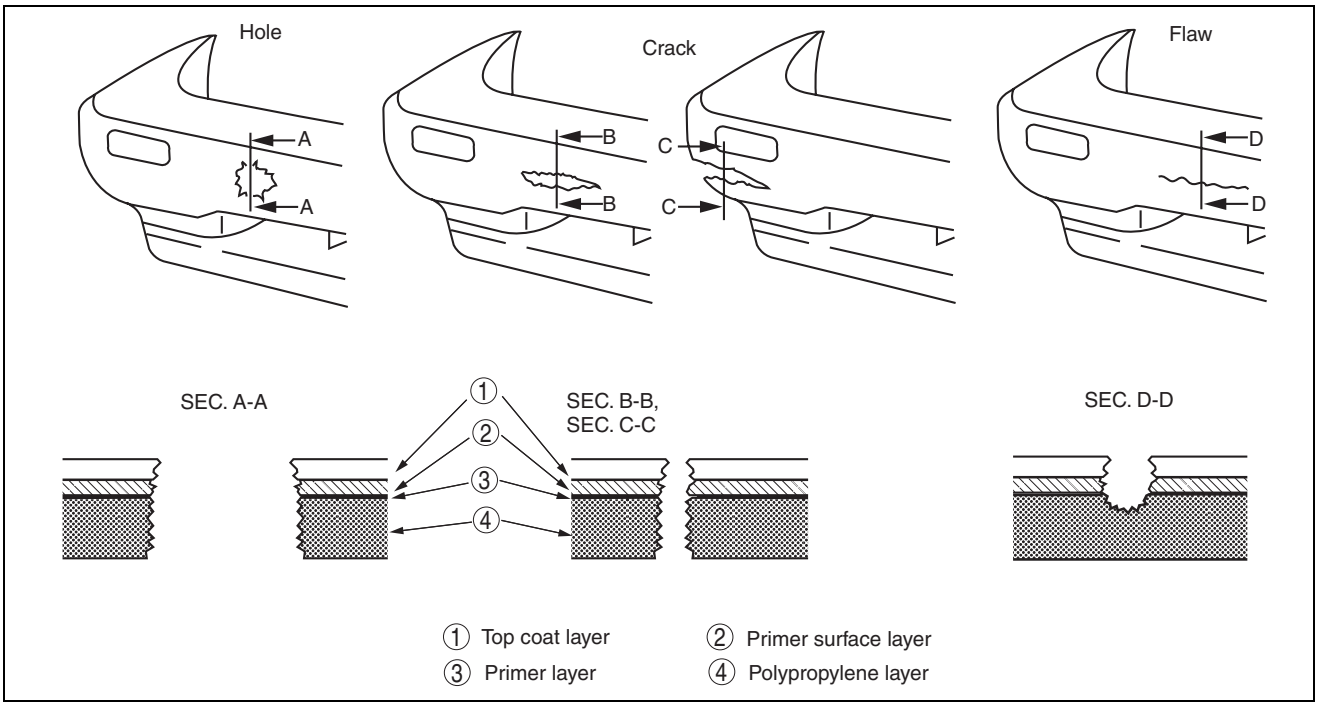

am2uub0000001

1. Cut the rough edges around the damage with a knife to make it smooth. Sand the area with a sander to make an angle of about 45°.

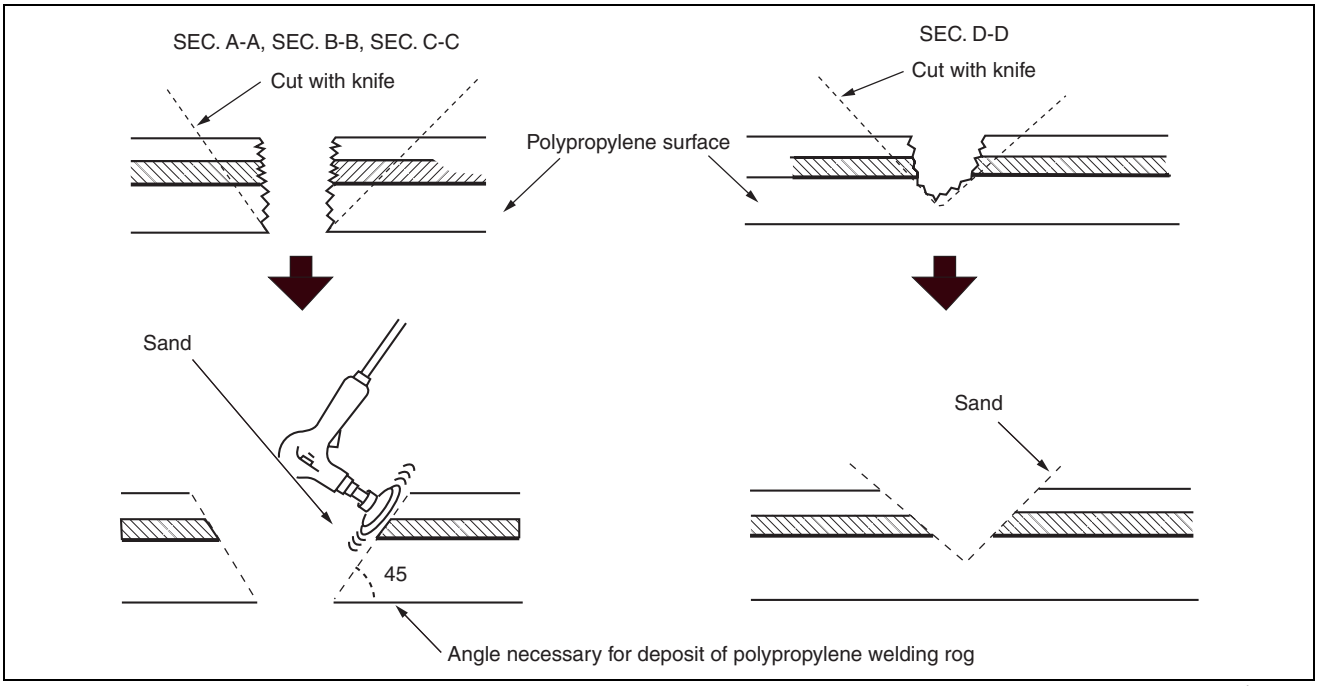

am2uub0000001

2. Weld the damaged area.

BODY STRUCTURE [PLASTIC BODY PARTS]

- For repair of a cracked area, melt the crack together with a heat gun and a melting attachment.

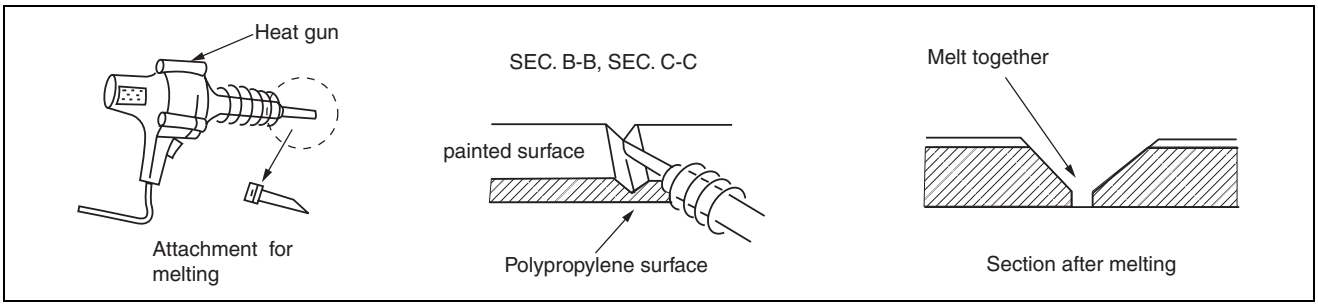

am2uub0000001

- For repair of a hole, degrease the area on both sides of the bumper and apply aluminium tape on the reverse side of the damage area.

3. Melt the polypropylene welding rod with a heat gun and deposit it the cracked area.

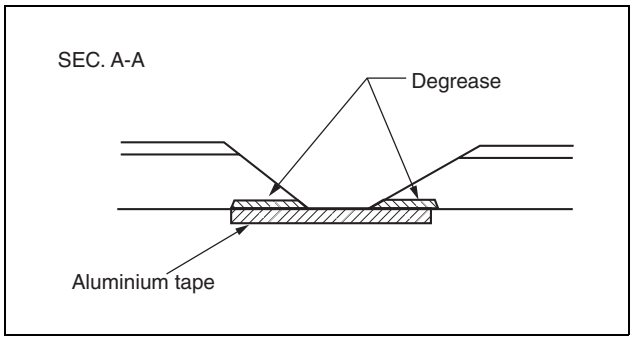

am2uub0000001

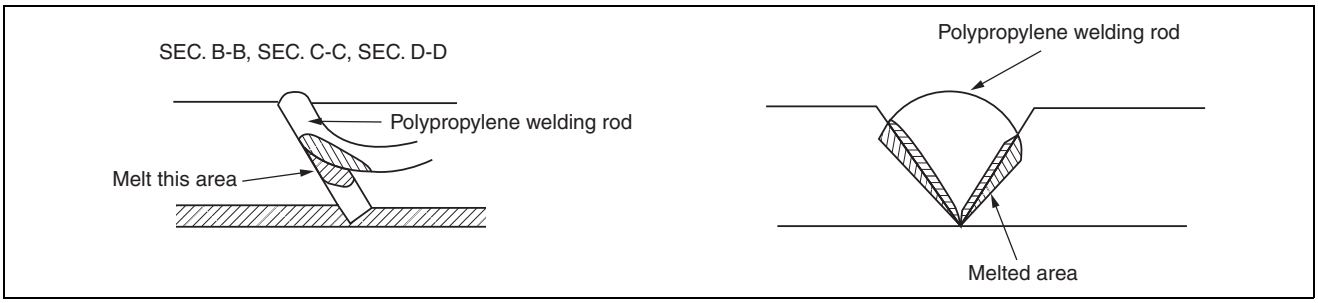

am2uub0000001

Note

- Heat the shaded area to melt it.
- Take care not to overly melt welding rod. If the part is welded with the welding rod melted like jelly, the welding strength will be reduced.
- Hold the heat gun 10—20 mm {0.39—0.79 in} from the part being welded.
- Do not move the welding rod until the welded parts cool.

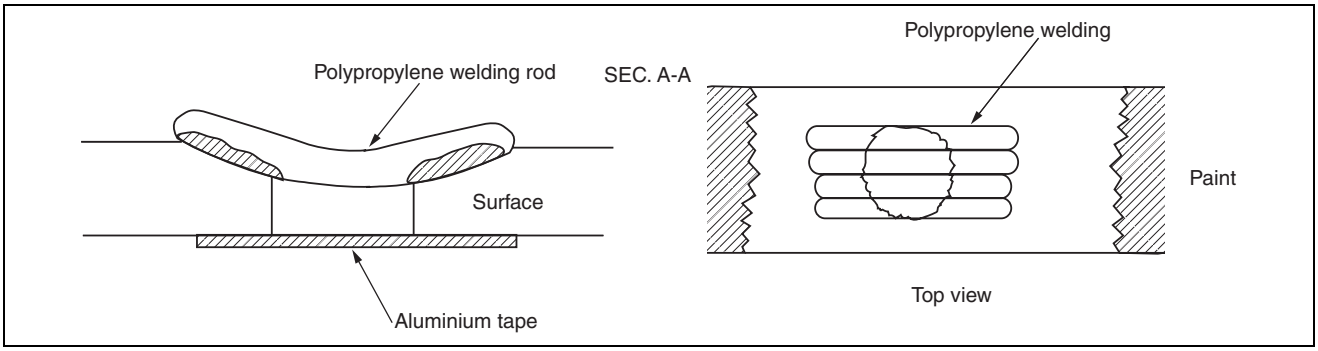

am2uub0000001

BODY STRUCTURE [PLASTIC BODY PARTS]

4. Sand the surface of the polypropylene gradually as it is easily melted by the abrasion heat. Sand the area to which repair agent will be applied.

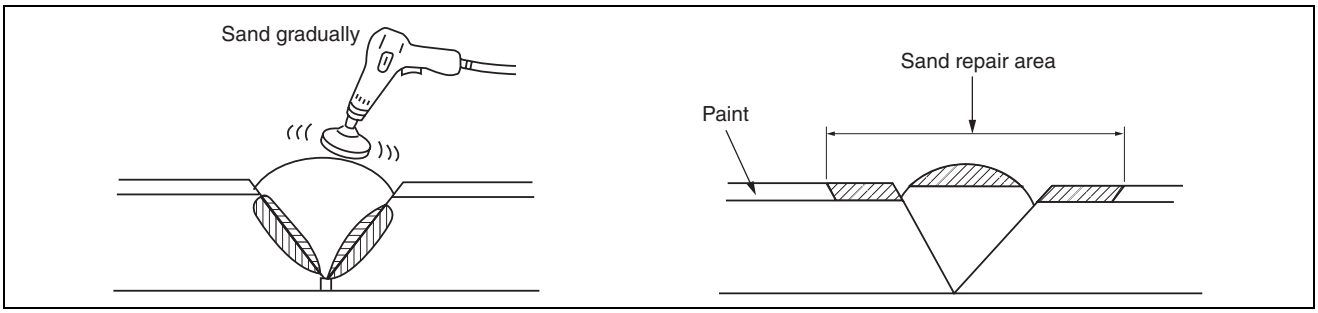

am2uub0000001

5. Uniformly apply polypropylene primer with a brush to an area larger than the repaired area. Allow to dry about 10 minutes at 20 °C {68 °F}.

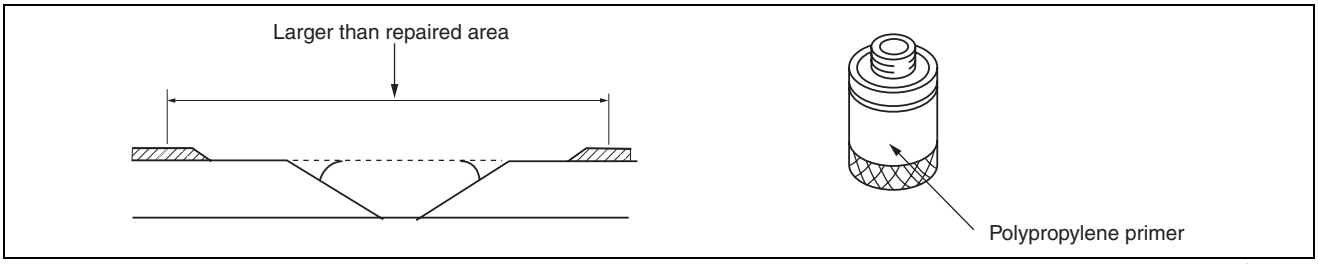

am2uub0000001

6. Mix the main agent and the stiffening agent in a ratio of one to one. Apply the mixed repair agent to the damaged area.

Note
- When mixing the main and stiffening agents, take care not to allow bubbles to form.
- The repair agent hardens quickly (about 5 minutes); proceed with the work immediately after mixing the agents.
- Allow about 30 minutes to dry (20 °C {68 °F}) before sanding.

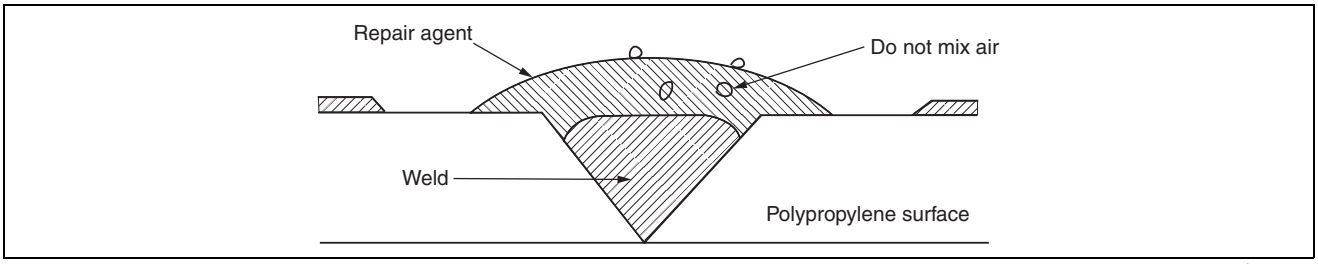

am2uub0000001

The repair agent is a two part epoxy adhesive.
When the repair agent hardens, it will provide a good finish with the same flexibility as the polypropylens.
The repair agent for a **urethane** bumper is also a two part adhesive compound. However, this is different from that for a polypropylene bumper. If the incorrect repair agent is used, the repair will be faulty.

7. Sand the area with #180—240 sandpaper.

Note
- If excessive force is applied to the area when sanding, the surface will be damaged.
- If fuzz remains around the repaired area, melt it with a heat gun.

BODY STRUCTURE [PLASTIC BODY PARTS]

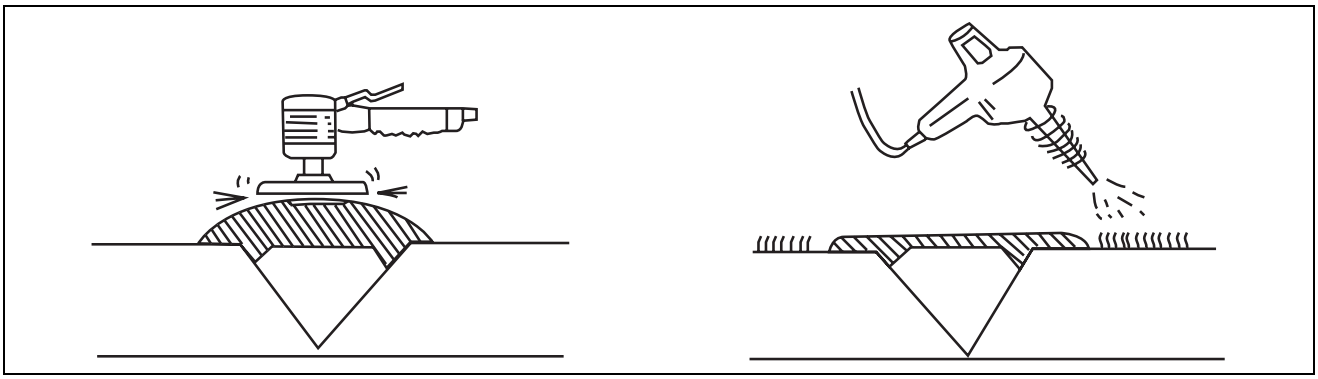

am2uub0000001

8. Degrease the painted surface.
9. Mix the primer and the hardener at a ratio of one to one. Apply the primer to the repaired area and the surface of the bumper with a brush or spray.

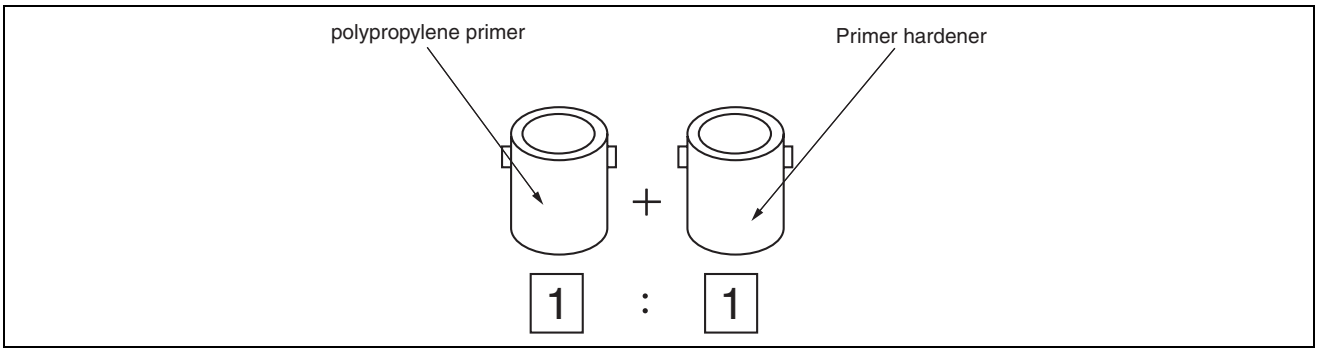

am2uub0000002

Use the primer within 16 hours after it is mixed.

Note
- Polypropylene primer will dissolve even after drying if it is wiped with solvent. Use only water to clean around the primer.

10. Allow the part to dry.
11. Add the softener to the urethane primer surfacer and spray it on the repaired area.
    a. Mixing method
       Urethane primer surfacer + Softener ..... Mixture A
       Mixture A + hardener ..... Mixture B
       Dilute mixture B with thinner to spray on bumper
    b. Viscosity
       14—16 seconds/viscosimeter 20 °C {68 °F}

Note
- Mix the solutions at the specified ratio.

    c. Spray pressure
       300—400 kPa {3—4 kg/cm^2, 43—57 psi}
    d. Standard film thickness
       30—40 μ
    e. Spray method
       Spot-spray primer surfacer on bumper three or four times
12. Air drying 20 °C {68 °F} — 8 hours minimum.
    Forced drying 60 °C {140 °F} — 1 hour
13. Lightly sand the complete surface of the bumper with #400—#600 sandpaper. Do not expose the surface of the polypropylene. (Wet or dry sanding is acceptable.)

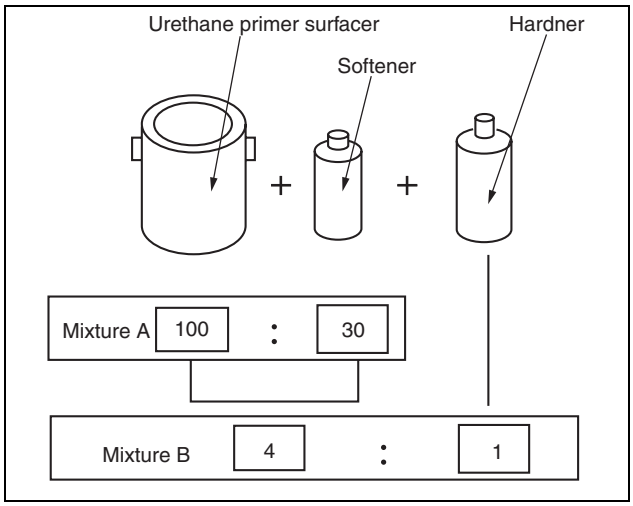

am2uub0000002

BODY STRUCTURE [PLASTIC BODY PARTS]

14. Wipe the complete surface of the bumper with degreasing agent. Quickly wipe the surface with a clean rag to degrease it.
15. Apply a matching coat of body color to the polypropylene bumper.

Note
- Be sure to use only urethane primer for a urethane bumper and polypropylene primer for a polypropylene bumper. Other paints for repairing a polypropylene bumper are the same as those for the urethane bumper.

16. Air drying 20 °C {68 °F} — 8 hours minimum.
    Forced drying 60 °C {140 °F} — 1 hour

Note
- Let the part air dry when possible as forced drying could cause bubbles in the top coat.

09-80F BODY STRUCTURE [CONSTRUCTION STANDARD VALUES]

CONSTRUCTION STANDARD VALUES [CONSTRUCTION STANDARD VALUES] 09-80F–1
Front view 09-80F–1
Rear view 09-80F–2

BODY STRUCTURE [CONSTRUCTION STANDARD VALUES]

CONSTRUCTION STANDARD VALUES [CONSTRUCTION STANDARD VALUES]

id0980c0740300

Front view

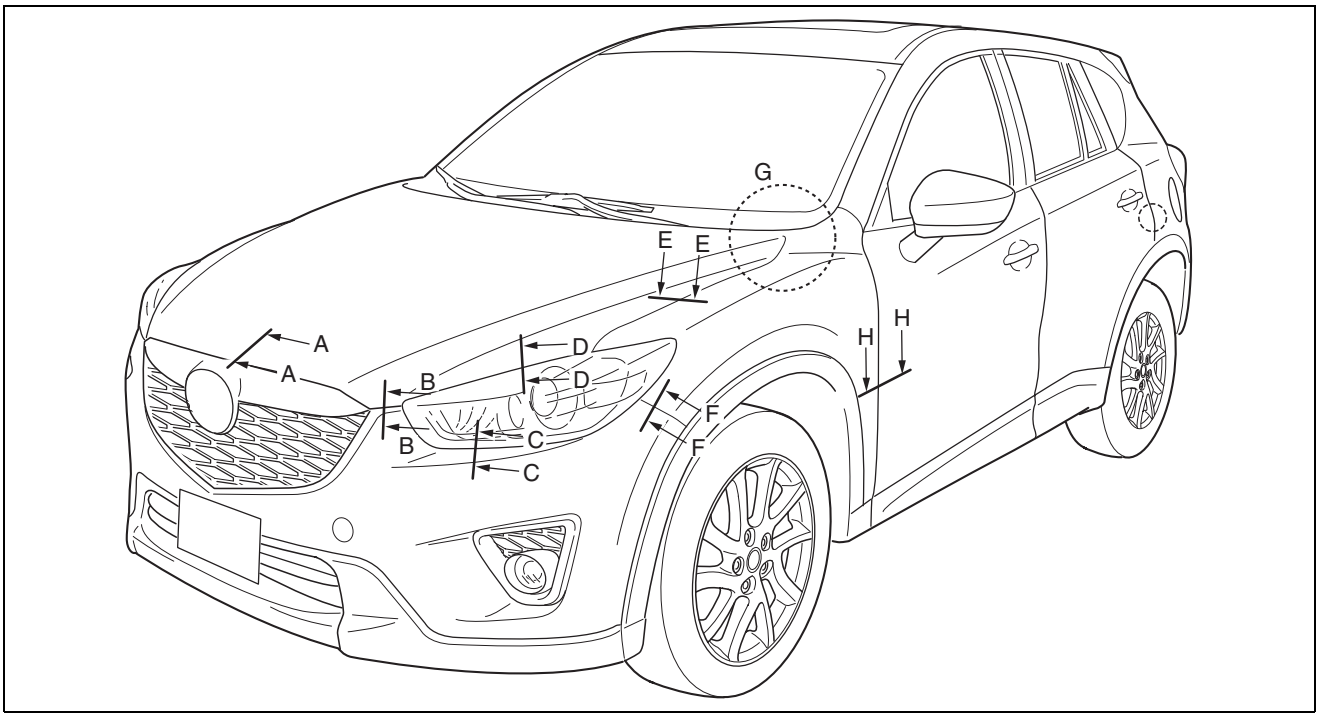

ac5wzb00000191

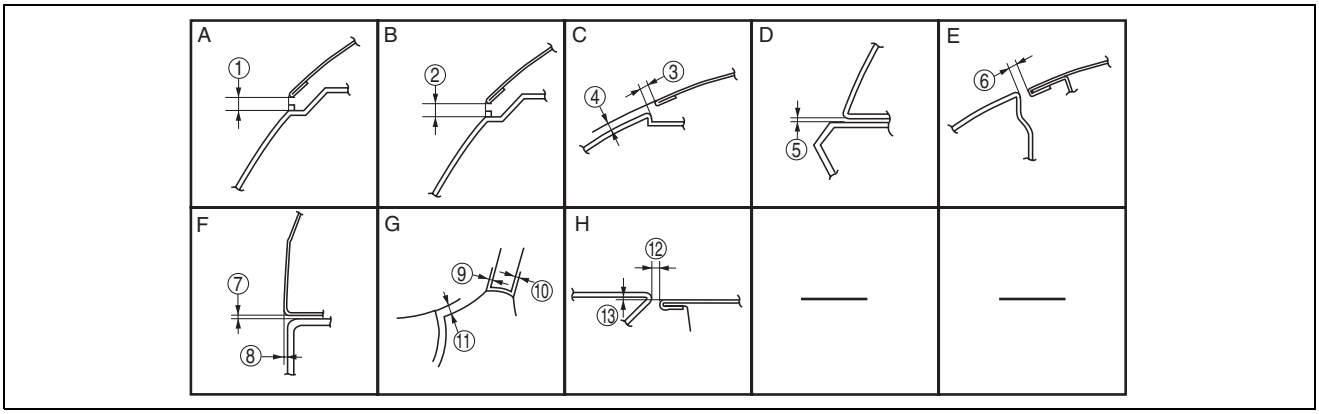

ac5wzb00000305

No.	Measurement part	Standard values (mm {in})	Maximum values (mm {in})	Minimum values (mm {in})	Side by difference (mm {in})
A	1	5.0 {0.20}	7.0 {0.27}	3.0 {0.12}	2.0 {0.079}
B	2	4.5 {0.18}	6.0 {0.24}	3.0 {0.12}	-

No.	Measurement part	Standard values (mm {in})	Maximum values (mm {in})	Minimum values (mm {in})	Side by difference (mm {in})
C	3	4.5 {0.18}	6.4 {0.25}	2.6 {0.10}	2.5 {0.098}
	4	1.0 {0.039}	2.8 {0.11}	-0.8 {-0.03}	-
D	5	1.8 {0.055}	3.2 {0.13}	0.4 {0.002}	1.4 {0.055}

BODY STRUCTURE [CONSTRUCTION STANDARD VALUES]

No.	Measurement part	Standard values (mm {in})	Maximum values (mm {in})	Minimum values (mm {in})	Side by difference (mm {in})
E	6	3.7 {0.15}	4.9 {0.19}	2.5 {0.098}	1.2 {0.047}
F	7	0.5 {0.02}	1.8 {0.071}	-	-
	8	0.5 {0.02}	1.2 {0.047}	0.2 {0.008}	-
G	9	0	1.6 {0.063}	-1.6 {-0.063}	-
	10	0	1.6 {0.063}	-1.6 {-0.063}	-
	11	0	1.5 {0.059}	-1.5 {-0.059}	-
H	12	3.5 {0.14}	4.5 {0.18}	2.5 {0.098}	1.0 {0.039}
	13	0	1.0 {0.039}	-1.0 {-0.039}	-

Rear view

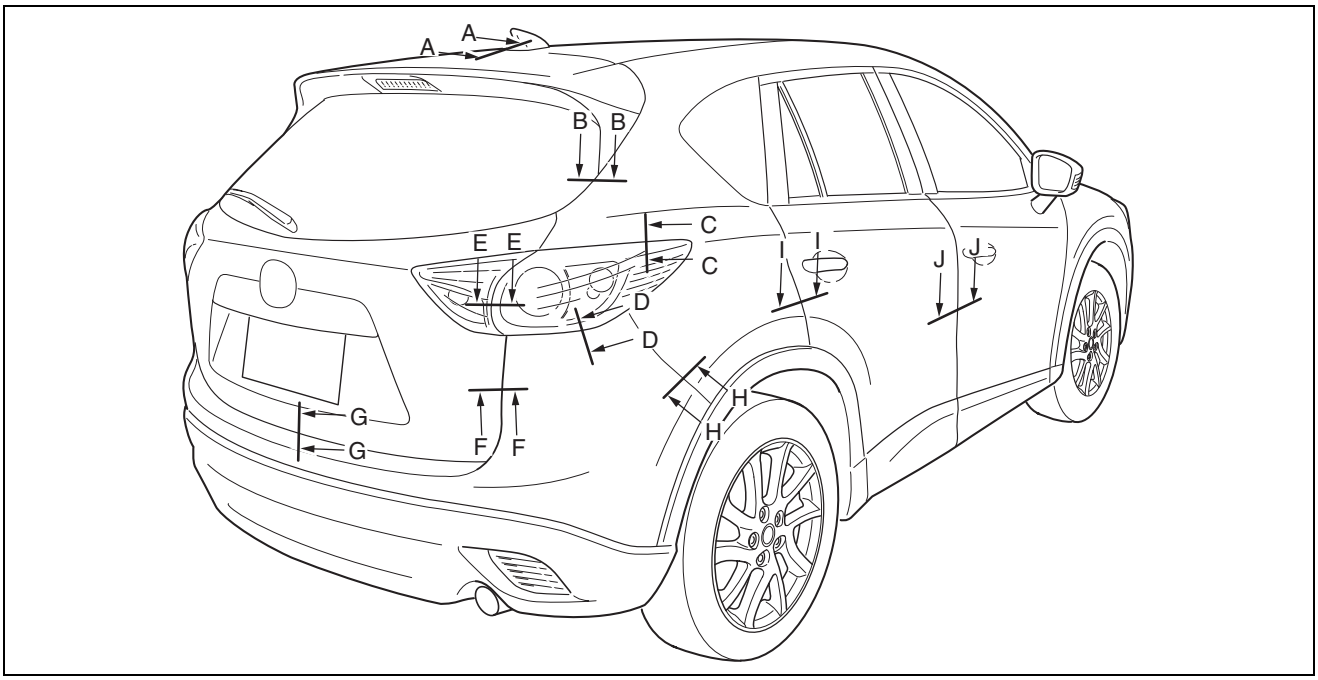

ac5wzb00000333

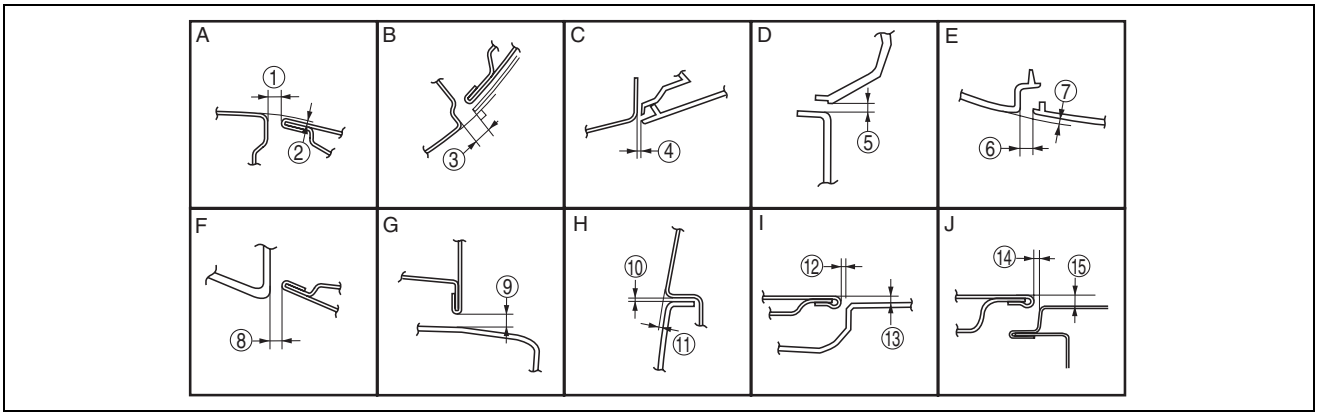

ac5wzb00000306

BODY STRUCTURE [CONSTRUCTION STANDARD VALUES]

No.	Measurement part	Standard values (mm {in})	Maximum values (mm {in})	Minimum values (mm {in})	Side by difference (mm {in})
A	1	6.0 {0.24}	7.0 {0.28}	5.0 {0.20}	1.2 {0.047}
	2	-1.0 {-0.039}	0	-2.0 {-0.079}	-
B	3	4.3 {0.17}	6.8 {0.27}	1.8 {0.071}	2.5 {0.047}
C	4	1.8 {0.071}	3.0 {0.12}	0.6 {0.02}	-
D	5	1.8 {0.071}	3.3 {0.13}	0.3 {0.01}	-
E	6	4.5 {0.18}	6.5 {0.26}	2.5 {0.098}	1.5 {0.059}
	7	0	1.8 {0.071}	-1.8 {-0.071}	-
F	8	4.0 {0.16}	6.5 {0.26}	1.5 {0.059}	2.5 {0.098}

No.	Measurement part	Standard values (mm {in})	Maximum values (mm {in})	Minimum values (mm {in})	Side by difference (mm {in})
G	9	6.0 {0.24}	8.0 {0.31}	4.0 {0.16}	2.0 {0.079}
H	10	0.5 {0.02}	1.8 {0.071}	-	-
	11	0.5 {0.02}	1.5 {0.059}	-0.2 {-0.008}	-
I	12	3.5 {0.14}	4.5 {0.18}	2.5 {0.098}	1.0 {0.039}
	13	0	1.0 {0.039}	-1.0 {-0.039}	-
J	14	3.5 {0.14}	4.5 {0.18}	2.5 {0.098}	1.0 {0.039}
	15	0	1.0 {0.039}	-1.0 {-0.039}	-